TM 55-1520-210-23-2

TECHNICAL MANUAL

AVIATION UNIT AND INTERMEDIATE MAINTENANCE INSTRUCTIONS ARMY MODEL UH-1H/V/EH-1H/X HELICOPTERS

This manual supersedes TM 55-1520-210-23-2, 20 February 1979, including all changes.

HEADQUARTERS, DEPARTMENT OF THE ARMY
30 SEPTEMBER 1987

CHANGE
NO. 15

HEADQUARTERS
DEPARTMENT OF THE ARMY
WASHINGTON, D.C., 30 May 2003

Aviation Unit and Intermediate
Maintenance Instructions

ARMY MODEL UH-1H/V/EH-1H/X HELICOPTERS

DISTRIBUTION STATEMENT A: Approved for public release; distribution is unlimited.

TM 55-1520-210-23-2, 30 September 1987, is changed as follows:

1. Remove and insert pages as indicated below. New or changed text material is indicated by a vertical bar in the margin. An illustration change is indicated by a miniature pointing hand.

Remove pages	Insert pages
A through E/(F blank)	A through E/(F blank)
7-63 and 7-64	7-63 and 7-64
8-44.1 and 8-44.2	8-44.1 and 8-44.2
9-31 and 9-32	9-31 and 9-32
10-43 and 10-44	10-43 and 10-44
11-37 and 11-38	11-37 and 11-38
11-41 and 11-42	11-41 and 11-42
11-89 and 11-90	11-89 and 11-90
14-103 and 14-104	14-103 and 14-104

2. Retain this sheet in front of manual for reference purposes.

By Order of the Secretary of the Army:

ERIC K. SHINSEKI
General, United States Army
Chief of Staff

Official:

JOEL B. HUDSON
Administrative Assistant to the
Secretary of the Army
0309004

DISTRIBUTION:
To be distributed in accordance with Initial Distribution Number 311408, requirements for TM 55-1520-210-23-2.

CHANGE
NO. 14

HEADQUARTERS
DEPARTMENT OF THE ARMY
WASHINGTON, D.C., 1 November 2001

Aviation Unit and Intermediate
Maintenance Instructions

ARMY MODEL UH-1H/V/EH-1H/X HELICOPTERS

DISTRIBUTION STATEMENT A: Approved for public release; distribution is unlimited.

TM 55-1520-210-23-2, 30 Spetmeber 1987, is changed as follows:

1. Remove and insert pages as indicated below. New or changed text material is indicated by a vertical bar in the margin. An illustration change is indicated by a miniature pointing hand.

Remove pages	Insert pages
a and b	a and b
A through D	A through E/(F blank)
7-11 through 7-14	7-11 through 7-14
———	7-14.1 / (7-14.2 blank)
7-15 through 7-18	7-15 through 7-18
7-21 through 7-26	7-21 through 7-26
———	7-26.1 / (7-26.2 blank)
7-31 and 7-32	7-31 and 7-32
7-37 through 7-40	7-37 through 7-40
7-43 and 7-44	7-43 and 7-44
7-55 and 7-56	7-55 and 7-56
7-59 and 7-60	7-59 and 7-60
7-60.3 / (7-60.4 blank)	7-60.3 / (7-60.4 blank)
7-61 and 7-62	7-61 and 7-62
7-65 and 7-66	7-65 and 7-66
7-69 and 7-70	7-69 and 7-70
7-71 and 7-72	7-71 and 7-72
7-72.1 and 7-72.2	7-72.1 and 7-72.2
7-72.5/(7-72.6 blank)	7-72.5/(7-72.6 blank)
7-73 and 7-74	7-73 and 7-74
7-79 and 7-80	7-79 and 7-80
7-81/ (7-82 blank)	7-81/(7-82 blank)
8-5 and 8-6	8-5 and 8-6
8-19 and 8-20	8-19 and 8-20
8-29 and 8-30	8-25 and 8-30
9-1 and 9-2	9-1 and 9-2
9-25 and 9-26	9-25 and 9-26

Remove pages	Insert pages
———	9-26.1 / (9-26.2 blank)
9-27 and 9-28	9-27 and 9-28
9-31 and 9-32	9-31 and 9-32
9-33 through 9-37 / (9-38 blank)	9-33 through 9-37 / (9-38 blank)
10-19 and 10-20	10-19 and 10-20
10-25 through 10-30	10-25 through 10-30
10-43 and 10-44	10-43 and 10-44
11-15 and 11-16	11-15 and 11-16
11-23 and 11-24	11-23 and 11-24
———	11-24.1 / (11-24.2 blank)
11-27 and 11-28	11-27 and 11-28
11-35 through 11-38	11-35 through 11-38
11-43 and 11-44	11-43 and 11-44
———	11-44.1 / (11-44.2 blank)
11-59 through 11-64	11-59 through 11-64
11-71 and 11-72	11-71 and 11-72
11-77 and 11-78	11-77 and 11-78
11-89 and 11-90	11-89 and 11-90
———	11-90.1/(11-90.2 blank)
11-99 and 11-100	11-99 and 11-100
———	11-100.1/(11-100.2 blank)
11-107 through 11-112	11-107 through 11-112
———	11-112.1/(11-112.2 blank)
11-113 and 11-114	11-113 and 11-114
11-117 through 11-120	11-117 through 11-120
11-123 and 11-124	11-123 and 11-124
———	11-124.1/(11-124.2 blank)
11-131 and 11-132	11-131 and 11-132
---------	11-132.1/(11-132.2 blank)
11-143 and 11-144	11-143 and 11-144
12-11 and 12-12	12-11 and 12-12
12-17 and 12-18	12-17 and 12-18
13-3 and 13-4	13-3 and 13-4
13-23 and 13-24	13-23 and 13-24
14-1/(14-2 blank)	14-1/(14-2 blank)
(14-61 blank)/14-62	(14-61 blank)/14-62
14-103 and 14-104	14-103 and 14-104
14-109 and 14-110	14-109 and 14-110
---------	14-110.1 and 14-110.2
---------	14-110.3/(14-110.4 blank)
14-111 and 14-112	14-111 and 14-112
16-25 and 16-26	16-25 and 16-26
17-1/(17-2 blank)	17-1/(17-2 blank)

2. Retain this sheet in front of manual for reference purposes.

By Order of the Secretary of the Army:

Official:

ERIC K. SHINSEKI
General, United States Army
Chief of Staff

JOEL B. HUDSON
Administrative Assistant to the
Secretary of the Army
0123404

DISTRIBUTION:
To be distributed in accordance with Initial Distribution Number 311408, requirements for TM 55-1520-210-23-2.

URGENT

TM 55-1520-210-23-2
C13

CHANGE

No. 13

HEADQUARTERS
DEPARTMENT OF THE ARMY
WASHINGTON, D.C., 1 May 2001

Aviation Unit and Intermediate
Maintenance Instructions

ARMY MODEL UH-1H/V/EH-1H/X HELICOPTERS

DISTRIBUTION STATEMENT A: Approved for public release; distribution is unlimited

TM 55-1520-210-23-2, 30 September 1987, is changed as follows:

1. Remove and insert pages as indicated below. New or changed text material is indicated by a vertical bar in the margin. An illustration change is indicated by a miniature pointing hand.

Remove Pages	Insert Pages
---	A thru D
9-85 and 9-86	9-85 and 9-86

2. Retain this sheet in front of manual for reference purposes.

By Order of the Secretary of the Army:

ERIC K. SHINSEKI
General, United States Army
Chief of staff

Official:

JOEL B. HUDSON
Administrative Assistant to the
Secretary of the Amy
0110902

DISTRIBUTION:
To be distributed in accordance with Initial Distribution Number (IDN) 311408, requirements for TM 55-1520-210-23-2.

URGENT

TM 55-1520-210-23-2
C12

CHANGE

No. 12

HEADQUARTERS
DEPARTMENT OF THE ARMY
WASHINGTON, D.C., 5 August 1997

Aviation Unit and Intermediate
Maintenance Instructions

ARMY MODEL UH-1H/V/EH-1H/X HELICOPTERS

DISTRIBUTION STATEMENT A: Approved for public release; distribution is unlimited

TM 55-1520-210-23-2, 30 September 1987, is changed as follows:

1. Remove and insert pages as indicated below. New or changed text material is indicated by a vertical bar in the margin. An illustration change is indicated by a miniature pointing hand.

Remove Pages	Insert Pages
9-93 and 9-94	9-93 and 9-94
- - - - - - - - - - - -	9-94.1 and 9-94.2

2. Retain this sheet in front of manual for reference purposes.

By Order of the Secretary of the Army:

DENNIS J. REIMER
General, United States Army
Chief of staff

Official:

JOEL B. HUDSON
Administrative Assistant to the
Secretary of the Amy
03867

DISTRIBUTION:
To be distributed in accordance with DA Form 12-31-E, block no. 1408 requirements for TM 55-1520-210-23-2.

URGENT

CHANGE

NO. 11

HEADQUARTERS
DEPARTMENT OF THE ARMY
WASHINGTON, D.C., 04 April 1997

Aviation Unit and Intermediate
Maintenance Instructions

ARMY MODEL UH-1 HN/EH-1 H/X HELICOPTERS

DISTRIBUTION STATEMENT A: Approved for public release; distribution is unlimited

TM 55-1520-210-23-1, 30 September 1987, is changed as follows:

1. Remove and insert pages as indicated below New or changed text material is indicated by a vertical bar in the margin An illustration change is indicated by a miniature pointing hand.

Remove Pages	Insert Pages
9-93 and 9-94	9-93 and 9-94

2. Retain this sheet in front of manual for reference purposes.

By Order of the Secretary of the Army:

DENNIS J. REIMER
General, United States Army
Chief of Staff

Official:

JOEL B. HUDSON
Administrative Assistant to the
Secretary of the Army
03230

DISTRIBUTION:
To be distributed in accordance with DA Form 12-31-E, block no. 1408 requirements for TM 55-1520-210-23-2.

CHANGE

NO. 10

HEADQUARTERS
DEPARTMENT OF THE ARMY
WASHINGTON, D.C., 22 July 1996

Aviation Unit and Intermediate
Maintenance Instructions

ARMY MODEL UH-I1HNIEH-1HIX HELICOPTERS

DISTRIBUTION STATEMENT A: Approved for public release; distribution is unlimited.

TM 55-1520-210-23-2, 30 September 1987, is changed as follows:

1. Remove and insert pages as indicated below New or changed text material is indicated by a vertical bar in the margin An illustration change is indicated by a miniature pointing hand.

Remove pages	**Insert pages**
i and ii	i and ii
7-43 and 744	743 and 7-44
7-59 and 740	7-59 and 740
9-15 and 9-16	9-15 and 9-16
9-25 through 9-28	9-25 through 9-28
9-31 and 9-32	9-31 and 9-32
9-32.1 and 9-32.2	9-32.1 and 9-32.2
9-33 through 9-36	9-33 through 9-36
9-101 and 9-102	9-101 and 9-102
10-15 through 10-18	10-15 through 10-18
10-29 and 10-30	10-29 and 10-30
10-30.11(10-30.2 blank)	10-30.1/(10-30.2 blank)
10-35 and 10-38	10-35 and 10-36
1043 and 10-44	1043 and 1044
10-45 and 10-46	1045/(1046 blank)
11-7 and 11-6	11-7 and 11-8
11-17 and 11-18	11-17 and 11-18
11-99 and 11-100	11-99 and 11-100
11-100.1/(11-100.2 blank)	
11-101	11-101 and 11-102
11-115 and 11-116	11-115 and 11-116
11-121 and 11-122	11-121 and 11-122
124.1/(12-4.2 blank)	12-4.11/(124.2 blank)
12-5 and	12-6 12-5 and 12-6
14-103 and 14-104	14-103 and 14-104
17-11/(17-2 blank)	17-1/(17-2 blank)
Index 3 and Index 4	Index 3 and Index 4
	Electronic 2028 Instructions

2. Retain this sheet In front of manual for reference purposes.

By Order of the Secretary of the Army:

DENNIS J. REIMER
General, United States Army
Chief of Staff

Official:

JOEL B. HUDSON
Administrative Assistant to the
Secretary of the Army

DISTRIBUTION:
To be distributed in accordance with DA Form 12-31-E, block no. 1408 requirements for TM 55-1520-210-23-2.

URGENT

TM 55-1520-210-23-2
C9

CHANGE

NO. 9

HEADQUARTERS
DEPARTMENT OF THE ARMY
WASHINGTON, D.C., 15 February 1996

Aviation Unit and Intermediate Maintenance Instructions

ARMY MODEL UH-1H/V/EH-1H/X HELICOPTERS

DISTRIBUTION STATEMENT A: Approved for public release; distribution is unlimited

TM 55-1520-210-23-2, 30 September 1987, is changed as follows:

1. Remove and insert pages as indicated below. New or changed text material is indicated by a vertical bar in the margin. An illustration change is indicated by a miniature pointing hand.

Remove pages	Insert pages
7-69 and 7-70	7-69 and 7-70
- - - - -	7-70.3/(7-70.4 blank)
7-73 and 7-74	7-73 and 7-74
14-1/(14-2 blank)	14-1/(14-2 blank)

2. Retain this sheet in front of manual for reference purposes.

By Order of the Secretary of the Army

DENNIS J. REIMER
General, United States Army
Chief of Staff

Official:
Yvonne M. Harrison
YVONNE M. HARRISON
Administrative Assistant to the secretary of the Army
01332

DISTRIBUTION:
To be distributed in accordance with DA Form 12-31-E, block no. 1408, requirements for TM 55-1520-210-23-2.

CHANGE

NO. 8

HEADQUARTERS
DEPARTMENT OF THE ARMY
WASHINGTON, D.C., 31 July 1995

Aviation Unit and Intermediate Maintenance Instructions

ARMY MODEL UH-1H/V/EH-1H/X HELICOPTERS

DISTRIBUTION STATEMENT A Approved for public release; distribution is unlimited

TM 55-1520-210-23-2, 30 September 1987, is changed as follows:

1. Remove and insert pages as indicated below. New or changed text material is indicated by a vertical bar in the margin. An illustration change is indicated by a miniature pointing hand.

Remove pages	Insert pages
8-41 and 8-42	8-41 and 8-42
- - - - - -	8-44.1 through 8-44.7/(8-44.8 blank)
8-45 and 8-46	8-45 and 8-46
Index 5 and Index 6	Index 5 and Index 6

2. Retain this sheet in front of manual for reference purposes.

By Order of the Secretary of the Army:

DENNIS J. REIMER
General, United States Army
Chief of Staff

Official:

JOEL B. HUDSON
Acting Administrative Assistant to the Secretary of the Army
00481

DISTRIBUTION:
To be distributed in accordance with DA Form 12-31-E, block no. 1408, requirements for TM 55-1520-210-23-2.

CHANGE

NO. 7

HEADQUARTERS
DEPARTMENT OF THE ARMY
WASHINGTON, D. C., 1 March 1995

Aviation Unit and Intermediate
Maintenance Instructions

ARMY MODEL UH-1H/V/EH-1H/X HELICOPTERS

DISTRIBUTION STATEMENT A: Approved for public release; distribution is unlimited.

TM 55-1520-210-23-2, 30 September 1987, is changed as follows:

1. Remove and insert pages as indicated below. New or changed text material is indicated by a vertical bar in the margin. An illustration change is indicated by a miniature pointing hand.

Remove pages	Insert pages
7-2.1/(7-2.2 blank)	7-2.1/(7-2.2 blank)
7-3 and 7-4	7-3 and 7-4
7-7 and 7-8	7-7 and 7-8
7-13 and 7-14	7-13 and 7-14
7-21 and 7-22	7-21 and 7-22
7-41 and 7-42	7-41 and 7-42
7-67 and 7-68	7-67 and 7-68
- - - -	7-68.1/(7-68.2 blank)
7-70.1/(7-70.2 blank)	7-70.1 and 7-70.2
7-72.5/(7-72.6 blank)	7-72.5/(7-72.6 blank)
7-73 and 7-74	7-73 and 7-74
8-25 through 8-28	8-25 through 8-28
8-41 and 8-42	8-41 and 8-42
8-47 through 8-54	8-47 through 8-53/(8-54 blank)
8-55	8-55/(8-56 blank)
9-1 through 9-6	9-1 through 9-5/(9-6 blank)
9-7 through 9-14	9-7 through 9-14
9-17 and 9-18	9-17 and 9-18
9-21 and 9-22	9-21 and 9-22
9-23 and 9-24	- - - -
9-27 through 9-30	9-27 through 9-29/(9-30 blank)
9-31 and 9-32	9-31 and 9-32
9-32.1 and 9-32.2	9-32.1 and 9-32.2

Remove pages	Insert pages
9-35 through 9-38	9-35 through 9-37/(9-38 blank)
9-39 and 9-40	9-39 and 9-40
9-43 and 9-44	9-43/(9-44 blank)
9-45 through 9-48	9-45 through 9-47/(9-48 blank)
9-51 and 9-52	(9-51 blank)/9-52
9-65 and 9-66	9-65 and 9-66
9-93 and 9-94	9-93 and 9-94
9-103 and 9-104	9-103 and 9-104
10-29 and 10-30	10-29 and 10-30
10-30.1/(10-30.2 blank)	10-30.1/(10-30.2 blank)
10-43 and 10-44	10-43 and 10-44
- - - -	10-44.1/(10-44.2 blank)
11-5 and 11-6	11-5 and 11-6
11-19 and 11-20	11-19 and 11-20
11-33 and 11-34	11-33 and 11-34
11-85 and 11-86	11-85 and 11-86
11-89 and 11-90	11-89 and 11-90
11-93 and 11-94	11-93 and 11-94
11-99 and 11-100	11-99 and 11-100
11-100.1/(11-100.2 blank)	11-100.1/(11-100.2 blank)
11-103 and 11-104	11-103 and 11-104
11-121 and 11-122	11-121 and 11-122
12-15 through 12-18	12-15 through 12-18
13-17 and 13-18	13-17 and 13-18
13-21 and 13-22	13-21 and 13-22
13-23 and 13-24	13-23 and 13-24
14-45 and 14-46	14-45/(14-46 blank)
14-63 and 14-64	14-63 and 14-64
16-23 through 16-26	16-23 through 16-26
16-57 and 16-58	16-57 and 16-58
16-59 and 16-60	(16-59 blank)/16-60
16-61 through 16-64	16-61 through 16-64
17-1/(17-2 blank)	17-1/(17-2 blank)
Index 9 through Index 12	Index 9 through Index 12

2. Retain these sheets in front of manual for reference purposes.

By Order of the Secretary of the Army:

GORDON R. SULLIVAN
General, United States Army
Chief of Staff

Official:

MILTON H. HAMILTON
Administrative Assistant to the
Secretary of the Army
07993

DISTRIBUTION:

To be distributed in accordance with DA Form 12-31-E, block no. 1408, requirements for TM 55-1520-210-23-2.

URGENT

NOTICE : THIS CHANGE HAS BEEN PRINTED AND DISTRIBUTED OUT OF SEQUENCE. IT SHOULD BE INSERTED IN THE MANUAL AND USED. UPON RECEIPT OF THE EARLIER SEQUENCED CHANGE . ENSURE A MORE CURRENT CHANGE PAGE IS NOT REPLACED WITH A LESS CURRENT PAGE.

TM 55-1520-210-23-2
C 6

CHANGE
NO. *6*

HEADQUARTERS
DEPARTMENT OF THE ARMY
WASHINGTON, D.C., 30 April 1993

Aviation Unit and Intermediate
Maintenance Instructions

ARMY MODEL UH-1H/V/EH-1H/X HELICOPTERS

DISTRIBUTION STATEMENT A: Approved for public release; distribution is unlimited.

TM 55-1520-210-23-2, 30 September 1987, is changed as follows:

1. Remove and insert pages as indicated below. New or changed text material is indicated by a vertical bar in the margin. An illustration change is indicated by a miniature pointing hand.

Remove pages	Insert pages
7-7 and 7-8	7-7 and 7-8
7-72.1 through 7-72.4	7-72.1 through 7-72.4
7-72.5/(7-72.6 blank)	7-72.5/(7-72.6 blank)
7-73/(7-74 blank)	7-73 and 7-74
9-33 and 9-34	9-33 and 9-34
9-93 and 9-94	9-93 and 9-94
10-9 and 10-10	10-9 and 10-10
10-15 through 10-18	10-15 through 10-18
10-29 and 10-30	10-29 and 10-30
	10-30.1/(10-30.2 blank)
10-31 and 10-32	10-31 and 10-32
10-43 and 10-44	10-43 and 10-44
11-1 and 11-2	11-1 and 11-2
11-5 through 11-8	11-5 through 11-8
11-15 and 11-16	11-15 and 11-16
11-27 and 11-28	11-27 and 11-28
12-3 and 12-4	12-3 and 12-4
14-101 through 14-104	14-101 through 14-104

2. The following pages are not applicable to Change 6. These pages were not assembled in proper order in previous changes.

Remove pages	Insert pages
7-43 and 7-44	7-43 and 7-44
7-67 and 7-68	7-67 and 7-68
9-35 and 9-36	9-35 and 9-36
10-1 and 10-2	10-1 and 10-2

Remove pages	Insert pages
10-13 and 10-14	10-13 and 10-14
10-35 and 10-36	10-35 and 10-36
11-13 and 11-14	11-13 and 11-14
11-17 and 11-18	11-17 and 11-18
11-31 and 11-32	11-31 and 11-32
11-121 and 11-122	11-121 and 11-122
13-23 and 13-24	13-23 and 13-24

3. Retain this sheet in front of manual for reference purposes.

By Order of the Secretary of the Army:

GORDON R. SULLIVAN
General, United States Army
Chief of Staff

Official:

MILTON H. HAMILTON
Administrative Assistant to the
Secretary of the Army
03418

DISTRIBUTION:
To be distributed in accordance with DA Form 12-31-E, block no. 1408, requirements for TM 55–1520–210-23–2.

CHANGE

NO. 5

HEADQUARTERS
DEPARTMENT OF THE ARMY
WASHINGTON, D.C., 31 March 1993

Aviation Unit and Intermediate
Maintenance Instructions
ARMY MODEL UH-1H/V/EH-1H/X HELICOPTERS

DISTRIBUTION STATEMENT A: Approved for public release; distribution is unlimited.

TM 55-1520-210-23-2, 30 September 1987, is changed as follows:

1. Remove and insert pages as indicated below. New or changed text material is indicated by a vertical bar in the margin. An illustration change is indicated by a miniature pointing hand.

Remove pages	Insert pages
i and ii	i and ii
7-9 and 7-10	7-9 and 7-10
7-13 and 7-14	7-13 and 7-14
7-42.1/(7-42.2 blank)	7-42.1/(7-42.2 blank)
7-69 and 7-70	7-69 and 7-70
----------	7-70.1/(7-70.2 blank)
7-71 and 7-72	7-71 and 7-72
7-77 and 7-78	7-77 and 7-78
7-81	7-81/(7-82 blank)
8-31 through 8-36	8-31 through 8-36
9-1 and 9-2	9-1 and 9-2
9-7 through 9-10	9-7 through 9-10
9-15 and 9-16	9-15 and 9-16
9-39 and 9-40	9-39 and 9-40
9-45 and 9-46	9-45 and 9-46
9-67 and 9-68	9-67 and 9-68
9-81 through 9-84	9-81 through 9-84
----------	9-84.1/(9-84.2 blank)
9-85 and 9-86	9-85 and 9-86
9-101 and 9-102	9-101 and 9-102
10-1 and 10-2	10-1 and 10-2
10-5 and 10-6	10-5 and 10-6
10-23 and 10-24	10-23 and 10-24
10-35 and 10-36	10-35 and 10-36
10-51 and 10-52	10-51 and 10-52
11-13 and 11-14	11-13 and 11-14
11-17 through 11-22	11-17 through 11-22
11-35 and 11-36	11-35 and 11-36
11-43 and 11-44	11-43 and 11-44
11-51 and 11-52	11-51 and 11-52
11-55 and 11-56	11-55 and 11-56
11-71 and 11-72	11-71 and 11-72
11-77 and 11-78	11-77 and 11-78
11-85 and 11-86	11-85 and 11-86
11-93 and 11-94	11-93 and 11-94
11-99 and 11-100	11-99 and 11-100

Remove pages	Insert pages
11-103 and 11-104	11-103 and 11-104
11-117 and 11-118	11-117 and 11-118
11-121 and 11-122	11-121 and 11-122
11-135 through 11-138	11-135 through 11-138
11-143 and 11-144	11-143 and 11-144
12-17 and 12-18	12-17 and 12-18
13-23 and 13-24	13-23 and 13-24
14-105 and 14-106	14-105 and 14-106
14-109	14-109 through 14-112

2. **THE FOLLOWING PAGES IN THIS CHANGE ARE CHANGE 6 PAGES. REMOVE THE CORRESPONDING CHANGE 6 PAGES AND REPLACE THEM WITH THE CHANGE 6 PAGES INCLUDED IN THIS CHANGE. WHEN CHANGE 6 WAS ORIGINALLY ISSUED, CERTAIN ADDITIONAL CHANGES REQUIRED ON THESE PAGES WERE INADVERTENTLY OMITTED. THE CHANGE *6* PAGES INCLUDED IN THIS CHANGE INCORPORATE ALL DATA THAT SHOULD HAVE BEEN INCLUDED IN CHANGE 6.**

Remove pages	**Insert pages**
7-72.1 through 7-72.5/(7-72.6 blank).	**7-72.1 through 7-72.5/(7-72.6 blank)**
10-29 and 10-30	**10-29 and 10-30**
14-101 and 14-102	**14-101 and 14-102**

3. Retain this sheet in front of manual for reference purposes.

By Order of the Secretary of the Army:

GORDON R. SULLIVAN
General, United States Army
Chief of Staff

Official:

MILTON H. HAMILTON
Administrative Assistant to the
Secretary of the Army
05231

DISTRIBUTION:
To be distributed in accordance with DA Form 12-31-E, block no. 1408, requirements for TM 55-1520-210-23-2.

CHANGE NO. 4

HEADQUARTERS
DEPARTMENT OF THE ARMY
WASHINGTON, D.C., 30 April 1992

Aviation Unit and Intermediate
Maintenance Instructions

ARMY MODEL UH-1H/V/EH-1H/X HELICOPTER

TM 55-1520-210-23-2, 20 September 1987, is changed as follows:

1. Remove and insert pages as indicated below. New or changed text material is indicated by a vertical bar in the margin. An illustration change is indicated by a miniature pointing hand.

Remove pages	Insert pages
7-9 and 7-10	7-9 and 7-10
7-17 and 7-18	7-17 and 7-18
7-37 through 7-40	7-37 through 7-40
------	7-40.1/7-40.2
7-41 and 7-42	7-41 and 7-42
7-42.1/7-42.2	7-42.1/7-42.2
7-43 through 7-46	7-43 through 7-46
7-49 and 7-50	7-49 and 7-50
-------	7-50.1/7-50.2
7-53 through 7-56	7-53 through 7-56
7-59 and 7-60	7-59 and 7-60
-------	7-60.1 through 7-60.3/7-60.4
7-63 through 7-72	7-63 through 7-72
7-72.1 and 7-72.2	7-72.1 and 7-72.2
7-73 through 7-76	7-73/7-74
8-1 and 8-2	8-1 and 8-2
8-5 and 8-6	8-5 and 8-6
8-19 and 8-20	8-19 and 8-20
8-25 and 8-26	8-25 and 8-26
8-35 and 8-36	8-35 and 8-36
8-41 and 8-42	8-41 and 8-42
8-45 and 8-46	8-45 and 8-46
9-31 and 9-32	9-31 and 9-32
-------	9-32.1 and 9-32.2
9-33 through 9-36	9-33 through 9-36
9-81 and 9-82	9-81 and 9-82
9-87 and 9-88	9-87 and 9-88
9-97 and 9-98	9-97 and 9-98
10-1 and 10-2	10-1 and 10-2
10-11 through 10-14	10-11 through 10-14
10-17 through 10-20	10-17 through 10-20
10-23 and 10-24	10-23 and 10-24
10-27 and 10-28	10-27 and 10-28
10-35 and 10-36	10-35 and 10-36

Remove pages	Insert pages
10-39 and 10-40	10-39 and 10-40
10-43 and 10-44	10-43 and 10-44
11-13 and 11-14	11-13 and 11-14
11-17 and 11-18	11-17 and 11-18
11-21 and 11-22	11-21 and 11-22
11-31 and 11-32	11-31 and 11-32
11-41 and 11-42	11-41 and 11-42
11-49 through 11-52	11-49 through 11-52
11-77 and 11-78	11-77 and 11-78
11-85 and 11-86	11-85 and 11-86
11-99 and 11-100	11-99 and 11-100
11-113 and 11-114	11-113 and 11-114
11-121 and 11-122	11-121 and 11-122
12-3 and 12-4	12-3 and 12-4
---	12-4.1/12-4.2
12-15 and 12-16	12-15 and 12-16
13-13 and 13-14	13-13 and 13-14
13-23 and 13-24	13-23 and 13-24
14-107 and 14-108	14-107 and 14-108

2. Retain this sheet in front of manual for reference purposes.

By Order of the Secretary of the Army:

GORDON R. SULLIVAN
General, United States Army
Chief of Staff

Official:

MILTON H. HAMILTON
Administrative Assistant to the
Secretary of the Army
01409

DISTRIBUTION :
To be distributed in accordance with DA Form 12-31, AVUM and AVIM requirements for TM 55-1520-210-23-2.

URGENT

TM 55-1520-210-23-2
C 3

CHANGE NO. 3

HEADQUARTERS
DEPARTMENT OF THE ARMY
WASHINGTON, D.C., 21 February 1991

Aviation Unit and Intermediate
Maintenance Instructions

ARMY MODEL UH-1H/V/EH-1H/X HELICOPTERS

TM 55-1520-210-23-2, 20 September 1987, is changed as follows:

1. Remove and insert pages as indicated below. New or changed text material is indicated by a vertical bar in the margin. An illustration change is indicated by a miniature pointing hand.

Remove pages	Insert pages
14-63 and 14-64	14-63 and 14-64
— - -	14-64.1/14-64.2
14-99 through 14-102	14-99 through 14-102

2. Retain this sheet in front of manual for reference purposes.

By Order of the Secretary of the Army:

CARL E. VUONO
General, United States Army
Chief of Staff

Official:

THOMAS F. SIKORA
Brigadier General, United States Army
The Adjutant General

DISTRIBUTION :
To be distributed in accordance with DA Form 12-31-E, block no. 1408, AVUM and AVIM maintenance requirements for TM 55-1520-210-23-2.

URGENT

CHANGE NO. 2

HEADQUARTERS
DEPARTMENT OF THE ARMY
WASHINGTON, D.C., 17 April 1990

Aviation Unit and Intermediate
Maintenance Instructions
ARMY MODEL UH-1H/V/EH-1H/X HELICOPTER

TM 55-1520-210-23-2, 30 September 1987, is changed as follows:

1. Remove and insert pages as indicated below. New or changed text material is indicated by a vertical bar in the margin. An illustration change is indicated by a miniature pointing hand.

Remove pages	Insert pages
i and ii	i and ii
7-1 and 7-2	7-1 and 7-2
- - - -	7-2.1/7-2.2
7-15 and 7-16	7-15 and 7-16
7-19 and 7-20	7-19 and 7-20
7-43 and 7-44	7-43 and 7-44
7-49 and 7-50	7-49 and 7-50
7-63 through 7-68	7-63 through 7-68
7-72.3 and 7-72.4	7-72.3 and 7-72.4
7-73 and 7-74	7-73/7-74
7-77 and 7-78	7-77 and 7-78
8-5 through 8-8	8-5 through 8-8
8-15 and 8-16	8-15 and 8-16
8-29 through 8-32	8-29 through 8-32
8-35 and 8-36	8-35 and 8-36
9-9 and 9-10	9-9 and 9-10
9-31 and 9-32	9-31 and 9-32
- - - -	9-32.1 and 9-32.2
9-33 through 9-36	9-33 through 9-36
9-43 through 9-46	9-43 through 9-46
9-91 through 9-94	9-91 through 9-94
10-1 and 10-2	10-1 and 10-2
--- -	10-2.1/10-2.2
10-11 through 10-14	10-11 through 10-14
10-21 and 10-22	10-21 and 10-22
10-29 through 10-36	10-29 through 10-36
10-39 and 10-40	10-39 and 1.0-40
10-43 and 10-44	10-43 and 10-44
10-49 and 10-50	10-49 and 10-50
11-7 and 11-8	11-7 and 11-8
11-11 through 11-18	11-11 through 11-18
11-31 and 11-32	11-31 and 11-32
- - - -	11-32.1/11-32.2
11-41 and 11-42	11-41 and 11-42
11-77 through 11-80	11-77 through 11-80
11-89 and 11-90	11-89 and 11-90
11-93 and 11-94	11-93 and 11-94
11-99 and 11-100	11-99 and 11-100

11-100.1/11-100.2	11-100.1/11-100.2
11-113 and 11-114	11-113 and 11-114
11-121 and 11-122	11-121 and 11-122
11-129 through 11-132	11-129 through 11-132
11-139 through 11-142	11-139 through 11-142
12-3 and 12-4	12-3 and 12-4
12-7 and 12-8	12-7 and 12-8
12-17 and 12-18	12-17 and 12-18
13-1 and 13-2	13-1 and 13-2
13-15 and 13-16	13-15 and 13-16
13-19 through 13-24	13-19 through 13-24
14-1 and 14-2	14-1/14-2
14-61 and 14-62	14-62
14-65 and 14-66	14-65 and 14-66
14-97 and 14-98	14-98
14-101 through 14-104	14-101 through 14-104
16-1 and 16-2	16-1 and 16-2
17-1/17-2	17-1/17-2
- - - -	Index-1 through Index-12
- - - -	Index-13/Index-14

2. Retain this sheet in front of manual for reference purposes.

By Order of the Secretary of the Army:

CARL E. VUONO
General, United States Army
Chief of Staff

Official:

WILLIAM J. MEEHAN II
Brigadier General, United States Army
The Adjutant General

DISTRIBUTION:
To be distributed in accordance with DA Form 12-31, AVUM and AVIM requirements for UH-1H, UH-1V, Helicopter Utility, EH-1H Helicopter, Electronic Countermeasure and EH-1X Helicopter, Electronic Countermeasure and Intercept.

URGENT

TM 55-1520-210-23-2
C 1

CHANGE
NO. 1

HEADQUARTERS
DEPARTMENT OF THE ARMY
WASHINGTON, D.C., 4 November 1988

Aviation Unit and Intermediate
Maintenance Instructions

ARMY MODEL UH-1H/V/EH-1H/X HELICOPTER

TM 55-1520-210-23-2, 20 September 1987, is changed as follows:

1. Remove and insert pages as indicated below. New or changed text material is indicated by a vertical bar in the margin. An illustration change is indicated by a miniature pointing hand.

Remove pages	Insert pages
7-37 through 7-42	7-37 through 7-42
- - -	7-42.1/7-42.2
7-43 and 7-44	7-43 and 7-44
7-55 and 7-56	7-55 and 7-56
7-67 through 7-72	7-67 through 7-72
- - -	7-72.1 through 7-72.5/7-72.6
7-73 and 7-74	7-73 and 7-74
7-79 and 7-80	7-79 and 7-80
8-19 and 8-20	8-19 and 8-20
11-99 and 11-100	11-99 and 11-100
- — -	11-100.1/11-100.2
12-3 and 12-4	12-3 and 12-4

2. Retain this sheet in front of manual for reference purposes.

By Order of the Secretary of the Army:

CARL E. VUONO
General, United States Army
Chief of Staff

Official:

R. L. DILWORTH
Brigadier General, United States Army
The Adjutant General

DISTRIBUTION :
To be distributed in accordance with DA Form 12-31, AVUM and AVIM requirements for UH-1H, UH-1V, Helicopter, Utility, EH-1H, Helicopter, Electronic Countermeasure and EH-1X Helicopter, Electronic Countermeasure & Intercept.

URGENT

TECHNICAL MANUAL

No. 55-1520-210-23-2

HEADQUARTERS
DEPARTMENT OF THE ARMY
WASHINGTON, D. C., 30 September 1987

Aviation Unit and Intermediate Maintenance Instructions

ARMY MODEL UH-1H/V/EH-1H/X HELICOPTERS

NOTE :

This manual is printed in three volumes as follows:

TM 55-1520-210-23-1, consisting of Table of Contents, preface, chapters 1 through 6.

TM 55-1520-210-23-2, consisting of Table of Contents, chapters 7 through 17.

TM 55-1520-210-23-3, consisting of Table of Contents, appendix A through F, and Index.

The appendices and index are applicable to all volumes.

WARNING

Personnel performing operations, procedures, and practices which are included or implied in this technical manual shall observe the following warnings. Disregard of these warnings and precautionary information can cause serious injury, or death.

Warnings, cautions, and notes are used to emphasize important and critical instructions and are used for the following conditions:

WARNING

An operating procedure, practice, etc., which, if not correctly followed, could result in personal injury or loss of life.

CAUTION

An operating procedure, practice, etc., which, if not strictly observed, could result in damage to or destruction of equipment.

NOTE

An operating procedure, condition, etc., which it is essential to highlight.

NOISE

Sound pressure levels in this helicopter during some operating conditions exceed the Surgeon General hearing conservation criteria, as defined in TB MED 501. Hearing protection devices, such as aviator helmet or ear plugs are required to be worn by all personnel in and around the helicopter during its operation.

ELECTROLYTE

Corrosive Battery Electrolyte (Potassium Hydroxide). Wear rubber gloves, apron, and face shield when handling leaking batteries. If potassium hydroxide is spilled on clothing, or other material wash immediately with clean water. If spilled on personnel, immediately start flushing the affected area with clean water. Continue washing until medical assistance arrives.

TOXIC POISONS

Turbine fuels and lubricating oils contain additives which are poisonous and readily absorbed through the skin. Do not allow them to remain on skin longer than necessary.

HANDLING HYDRAULIC FLUID (MIL-H-83282)

Prolonged contact with liquid or mist can irritate eyes and skin. After any prolonged contact with skin, immediately wash contacted area with soap and water. If liquid contacts eyes, flush immediately with clear water. If liquid is swallowed, do not induce vomiting, get immediate medical attention. Wear rubber gloves when handling liquid. If prolonged contact with mist is likely, wear an apporopriate respirator. When fluid is decomposed by heating, toxic gases are released.

STARTING HELICOPTER

Starting and operation of the helicopter will be performed only by authorized personnel in accordance with AR 95-1.

GROUNDING HELICOPTER

The helicopter should be electrically grounded when parked. Turn off all power switches before making electrical connections or disconnections. Serious burns and electrical shock can result from contact with exposed electrical wires or connectors.

Before removing any engine ignition system component, ground the leads to dissipate any stored voltage in ignition unit.

FIRE EXTINGUISHER

Exposure to high concentrations of fire extinguishing agent or decomposition products should be avoided. The liquid should not be allowed to come into contact with the skin, as it may cause frost bite or low temperature burns.

ARMAMENT

Loaded weapons, or weapons being loaded or unloaded, shall be pointed in a direction which offers the least exposure to personnel or property in the event of accidental firing. Personnel shall remain clear of hazardous area of all loaded weapons.

ANY ROTATION OF THE GUN ARMAMENT SUBSYSTEM BARRELS WILL CAUSE THE GUN TO FIRE. Upon landing, immediately alert personnel to probable presence of live rounds in the gun. Summon armament repairman to clear weapon.

FUELING AND DEFUELING

When refueling helicopter, the refueling vehicle or forward air refueling unit must be parked a minimum of 20 feet from the helicopter. Before starting the fueling operation, always insert fueling nozzle grounding chain of fuel truck ground wire into GROUND-HERE receptacle located on the right side of the helicopter aft of the cabin area. Refer to FM 10-68.

When defueling, turn off all electrical switches and disconnect external power from the helicopter. The helicopter must be electrically grounded prior to defueling.

RADIOACTIVE MATERIALS

Self-luminous dials and ignition units may contain radioactive materials. If such an instrument or unit is broken or becomes unsealed, avoid personal contact. Use forceps or gloves made of rubber or polyethylene to pick up contaminated material. Place materials and gloves in a plastic bag. Seal bag and dispose of it as radioactive waste in accordance with AR755-15 and TM 3-261 (Refer to TB 43-0108). Repair procedures shall conform to requirements in AR700-52.

CLEANING SOLVENTS

Cleaning solvents may be flammable and toxic. Use only in well ventilated areas. Avoid inhalation of vapor and skin contact. Do not use solvents near open flame or in areas where very high temperatures prevail. Solvents with a flash point greater than 100 F (38 C) should not be used unless otherwise specified.

ROTOR BLADES

Personnel will stay clear of rotor blades during operation. Refer to Chapter 1 for rotor blade dimensions and clearances.

LIST OF EFFECTIVE PAGES

Insert latest changed pages. Dispose of superseded pages in accordance with regulations.

NOTE: On a changed page, the portion of the text affected by the latest change is indicated by a vertical line, or other change symbol, in the outer margin of the page. Changes to illustrations are indicated by miniature pointing hands.

DATES OF ISSUE FOR ORIGINAL AND CHANGED PAGES ARE:

Original	0	30 September 1987
Change	1	04 November 1988
Change	2	17 April 1990
Change	3	21 February 1991
Change	4	30 April 1992
Change	5	31 March 1993
Change	6	30 April 1993
Change	7	01 March 1995
Change	8	31 July 1995
Change	9	15 February 1996
Change	10	22 July 1996
Change	11	04 April 1997
Change	12	05 August 1997
Change	13	01 May 2001
Change	14	01 November 2001
Change	15	30 May 2003

TOTAL NUMBER OF PAGES IN THIS PUBLICATION IS 265, CONSISTING OF THE FOLLOWING:

Page No.	*Change No.
Cover	0
a	0
b	14
A–E	15
F blank	15
i -ii	10
iii	0
iv blank	0
7-1	2
7-2	0
7-2.1	7
7-2.2 blank	7
7-3	0
7-4	7
7-5 – 7-6	0
7-7	6
7-8	7
7-9	5
7-10	0
7-11	14
7-12	0
7-13	7
7-14	14
7-14.1	14
7-14.2 blank	14
7-15	2
7-16	14
7-17	14
7-18	14
7-19	0
7-20	2
7-21 – 7-22	14
7-23	0
7-24	14
7-25	0
7-26	14
7-26.1	14
7-26.2 blank	14
7-27 – 7-31	0
7-32	14
7-33 – 7-36	0
7-37 – 7-38	14
7-39	14
7-40 – 7-40.1	4
7-40.2 blank	4
7-41	4
7-42	7
7-42.1	5
7-42.2 blank	5
7-43	14
7-44	4
7-45	0
7-46	4
7-47 – 7-48	0
7-49 – 7-50.1	4
7-50.2 blank	4
7-51 – 7-52	0
7-53	4
7-54	0
7-55 – 7-56	14
7-57 – 7-58	0
7-59	14
7-60	10
7-60.1 – 7-60.2	4

Page No.	*Change No.
7-60.1 – 7-60.2	4
7-60.3	14
7-60.4 blank	4
7-61	14
7-62 and 7-63	0
7-64	15
7-65	14
7-66	4
7-67	2
7-69 – 7-68.1	7
7-68.2 blank	7
7-69	9
7-70	14
7-70.1	7
7-70.2	7
7-70.3	9
7-70.4 blank	9
7-71	14
7-72	5
7-72.1	14
7-72.2	14
7-72.3	1
7-72.4	6
7-72.5	14
7-72.6 blank	7
7-73	14
7-74	7
7-75 – 7-76	deleted
7-77 – 7-78	5
7-79	0
7-80	14
7-81	14
7-82 blank	5
8-1 – 8-2	4
8-3 – 8-4	0
8-5	14
8-6	4
8-7	0
8-8	2
8-9 – 8-15	0
8-16	2
8-17 – 8-18	0
8-19	14
8-20 – 8-24	0
8-25	4
8-26	7
8-27	0
8-28	7
8-29	14
8-30	0
8-30 – 8-36	5
8-37 – 8-40	0
8-41	8
8-42 – 8-44	0
8-44.1	8
8-44.2	15

Page No.	*Change No.
8-44.3 – 8-44.7	8
8-44.8 blank	8
8-45	8
8-46	4
8-47	0
8-48 – 8-53	7
8-54 blank	7
8-55	7
8-56 blank	7
9-1	7
9-2	14
9-3 – 9-5	7
9-6 blank	7
9-7 – 9-13	7
9-14	0
9-15 – 9-16	10
9-17	0
9-18	7
9-19 – 9-20	0
9-21 – 9-22	7
9-23 – 9-24	deleted
9-25	0
9-26	14
9-26.1	14
9-26.2 blank	14
9-27	10
9-28	14
9-29	7
9-30 blank	7
9-31	15
9-32	7
9-32.1	2
9-32.2	10
9-33	6
9-34 – 9-35	14
9-36	10
9-37	14
9-38 blank	7
9-39 – 9-40	7
9-41 – 9-42	0
9-43	7
9-44 blank	7
9-45	0
9-46 – 9-47	7
9-48 blank	7
9-49 – 9-50	deleted
9-51 blank	7
9-52	7
9-53 – 9-64	0
9-65	7
9-66	0
9-67 – 9-68	5
9-69 – 9-80	0
9-81	5
9-82	0
9-83	5

Page No.	*Change No.
9-84	0
9-84.1	5
9-84.2 blank	5
9-85	13
9-86	13
9-87	0
9-88	4
9-89	0
9-90 blank	0
9-91	2
9-92	0
9-93 – 9-94.2	12
9-95 – 9-97	0
9-98	4
9-99 – 9-100	0
9-101	5
9-102	10
9-103 – 9-104	7
10-1	2
10-2	4
10-2.1	2
10-2.2 blank	2
10-3 – 10-5	0
10-6	5
10-7 – 10-9	0
10-10	6
10-11	0
10-12 – 10-13	4
10-14	0
10-15 – 10-18	10
10-19	0
10-20	14
10-21	0
10-22	2
10-23	4
10-24	5
10-25	0
10-26	14
10-27	0
10-28	14
10-29	14
10-30 – 10-30.1	10
10-30.2 blank	10
10-31 – 10-32	6
10-33	2
10-34	0
10-35 – 10-36	10
10-37 – 10-38	0
10-39	4
10-40 – 10-42	0
10-43	15
10-44	14
10-44.1	7
10-44.2 blank	7
10-45	10
10-46 blank	10

Page No.	*Change No.
10-47 – 10-49	0
10-50	2
10-51	0
10-52	5
10-53 – 10-55	0
10-56 blank	0
11-1	6
11-2 – 11-4	0
11-5	6
11-6	7
11-7	6
11-8	10
11-9 – 11-10	0
11-11	2
11-12	0
11-13	4
11-14	5
11-15	0
11-16	14
11-17 – 11-18	10
11-19 – 11-20	7
11-21	0
11-22	5
11-23	0
11-24	14
11-24.1	14
11-24.2 blank	14
11-25 – 11-26	0
11-27	14
11-28	14
11-29 – 11-30	0
11-31	2
11-32	4
11-32.1	2
11-32.2 blank	2
11-33	0
11-34	7
11-35 – 11-36	14
11-37	0
11-38	15
11-39 – 11-40	0
11-41	15
11-42	0
11-43 – 11-44	14
11-44.1	14
11-44.2 blank	14
11-45 – 11-49	0
11-50	4
11-51	5
11-52 – 11-54	0
11-55 – 11-56	5
11-57 – 11-59	0
11-60 – 11-61	14
11-62	0
11-63	14
11-64 – 11-70	0

Page No.	*Change No.
11-71	14
11-72 – 11-76	0
11-77	5
11-78	14
11-79	2
11-80 – 11-82	0
11-83 blank	0
11-84 blank	0
11-85	7
11-86 – 11-88	0
11-89	14
11-90	15
11-90.1	14
11-90.2 blank	14
11-91 – 11-92	0
11-93	7
11-94	5
11-95 – 11-98	0
11-99 – 11-100	14
11-100.1	14
11-100.2 blank	14
11-101 – 11-102	10
11-103	7
11-104 – 11-106	0
11-107	14
11-108	0
11-109	14
11-110 – 11-111	0
11-112	14
11-112.1	14
11-112.2 blank	14
11-113	0
11-114	14
11-115	10
11-116 – 11-117	0
11-118 – 11-119	14
11-120	0
11-121	10
11-122	2
11-123 – 11-24	14
11-124.1	14
11-124.2 blank	14
11-125 – 11-128	0
11-129 – 11-131	2
11-132	14
11-132.1	14
11-132.2 blank	14
11-133 – 11-135	0
11-136 – 11-137	5
11-138	0
11-139	2
11-140 – 11-141	0
11-142	2
11-143	0
11-144	14
12-1 – 12.2	0

Page No.	*Change No.
12-3	6
12-4	0
12-4.1	10
12-4.2 blank	10
12-5 – 12-6	10
12-7	0
12-8	2
12-9 – 12.11	0
12-12	14
12-13 – 12-14	0
12-15	7
12-16	0
12-17	14
12-18	7
12-19 – 12.20	0
13-1	2
13-2	0
13-3	14
13-4 – 13-13	0
13-14	4
13-15	0
13-16	2
13-17	0
13-18	1
13-19	2
13-20	0
13-21 – 13-22	7
13-23	2
13-24	7
13-25 – 13-28	0
14-1	14
14-2 blank	9
14-45	7
14-46 blank	7
14-47 – 14-61	deleted
14-62	14
14-63	7
14-64	0
14-64.1	3
14-64.2 blank	3
14-65	0
14-66	2
14-67 – 14-82	deleted
14-83 – 14-86	0
14-87 – 14-96	deleted
14-97 blank	2
14-98	2
14-99	0
14-100	3
14-101	6
14-102	5
14-103	15
14-104	6
14-105 – 14-106	5
14-107	0
14-108	4

Page No.	*Change No.
14-109 – 14-110	14
14-110.1 – 14-110.3	14
14-110.4 blank	14
14-111 – 14-112	14
15-1	0
15-2 blank	0
16-1	0
16-2	2
16-3 – 16-22	0
16-23	7
16-24 – 16-25	0
16-26	14
16-27 – 16-56	0
16-57 – 16-58	7
16-59 blank	7
16-60	7
16-61	0
16-62 – 16-64	7
16-65 – 16-93	0
16-94 blank	0
17-1	14
17-2 blank	10
Index-1 – Index-2	0
Index-3 – Index-4	10
Index-5	8
Index-6 – Index-8	0
Index-9	7
Index-10 – Index-11	0
Index-12	7
Index-13	0
Index-14 blank	0

*A zero in this column indicates an original page.

TECHNICAL MANUAL

NO. 55-1520-210-23-2

HEADQUARTERS
DEPARTMENT OF THE ARMY
WASHINGTON, D.C., 30 September 1987

AVIATION UNIT AND INTERMEDIATE MAINTENANCE INSTRUCTIONS
ARMY MODEL UH-IHNIEH-IHIX HELICOPTERS

REPORTING OF ERRORS

You can help Improve this manual. If you find any mistakes or if you know of a way to improve the procedures, please let us know Mail your letter, DA Form 2028 (Recommended Changes to Publications and Blank Forms), or DA Form 2028-2 located in the back of this manual direct to: Commander, U.S. Army Aviation and Troop Command, ATTN: AMSAT4-MP, 4300 Goodfellow Blvd, St Louis, MO 63120-1798. A reply will be furnished to you. You may also submit your recommended changes by E-mail directly to <mpmt%avma28gst-louis-emh7.army.mil>. A reply will be furnished to you.

DISTRIBUTION STATEMENT A: Approved for public release; distribution Is unlimited.

TABLE OF CONTENTS

			Page
CHAPTER	1	INTRODUCTION	
Section	I	Servicing	1-1
	II	Lubrication	1-50
	III	Handling, Jacking, Mooring, Hoisting, and Sling Loading	1-54
	IV	Inspection Requirements	1-66
	V	Overhaul and Retirement Schedule	1-110
	VI	Flight Safety Critical Aircraft Parts (FSCAP) Program	1-115
CHAPTER	2	AIRFRAME	
Section	I	Fuselage	2-1
	II	Tallboom	2-193
CHAPTER 3	AUGHTING GEAR		
Section	I	Landing Gear	3-1
	II	Skids/Struts	3-30
	III	Floats	3-30
	IV	Skis	3-30
	V	Brakes	3-30
CHAPTER 4	POWER PLANT		
Section	I	Power Plant	4-1
	II	Cooling System	4-13
	III	Air Induction System	4-13
	IV	Exhaust System	4-42.7
	V	Oil System	4-44
	VI	Ignition System	4-61
	VII	Power Controls	4-41
	VIII	Quick Change Assembly (AVIM)	4-86

TABLE OF CONTENTS (Cont)

			Page
CHAPTER	5	ROTORS	
Section	I	Main Rotor System	5-1
	II	Main Rotor Hub	5-16
	III	Main Rotor Blades	5-38.1
	IV	Main Rotor Controls	5-53
	V	Tall Rotor System	5-104
	VI	Tall Rotor Hub and Blade Assembly	5-107
	VII	Tall Rotor Hub and Controls	5-119
	VIII	Tail Rotor Blades	5-132
	XI	Tracking Procedures	5-138
CHAPTER	6	DRIVE TRAIN SYSTEM	
Section	I	Main Driveshaft	6-1
	II	Clutch	6-29
	III	Main Transmission	6-29
	IV	Tail Rotor Driveshaft	6-1162
	V	Intermediate Gearbox	6-138
	VI	Tall Rotor Gearbox	6-148
	VII	Oil Systems	6-167
CHAPTER	7	HYDRAULIC AND PNEUMATIC SYSTEMS	
Section	I	Hydraulic System	7-1
	II	Pneumatic System (Not Applicable)	7-81
CHAPTER	8	INSTRUMENT SYSTEMS	
Section	I	Instrument Maintenance	8-1
	II	Engine Instruments	8-2
	III	Flight Instruments	8-22
	IV	Navigation Instruments	8-33
	V	Miscellaneous Instruments	8-37
	VI	Instrument Panels	8-51
CHAPTER	9	ELECTRICAL SYSTEMS	
Section	I	Direct Current Power Distribution System	9-1
	II	Alternating Current Power Distribution System	9-41
	III	Starting System	9-52
	IV	Ignition System	9-54
	V	Lighting Provisions	9-56
	VI	Miscellaneous Equipment	9-94
CHAPTER	10	FUEL SYSTEM	
Section	I	Fuel Cells	10-1
	II	Fuel Systems	10-11
CHAPTER	11	FLIGHT CONTROLS	
Section	I	Controls Surfaces	11-1
	II	Flight Control Components	11-1

TABLE OF CONTENTS (Cont)

		Page
CHAPTER 12	UTILITY SYSTEMS	
Section I	Fire Detector System	12-1
II	Windshield Wiper System	12-5
III	Rear View Mirror	12-20
CHAPTER 13	ENVIRONMENTAL CONTROL SYSTEM	
Section I	Heating System	13-1
II	Air Cooling System	13-15
III	Winterization Equipment	13-18
CHAPTER 14	HOIST AND WINCHES	
Section I	Personnel Rescue Hoist	14-1
II	Cargo Suspension Assembly	14-98
CHAPTER 15	AUXILIARY POWER PLANTS (Non applicable)	15-1
CHAPTER 16	MISSION EQUIPMENT	16-1
CHAPTER 17	EMERGENCY EQUIPMENT	17-1
APPENDIX A	REFERENCE	A-1
APPENDIX B	MAINTENANCE ALLOCATION CHART	
Section I	Three Levels of Maintenance Concept	B-1
II	Maintenance Allocation Chart	B-6
III	Tools and Test Equipment	B-79
IV	Remarks	B-105
APPENDIX C	AIRCRAFT INVENTORY MASTER GUIDE	C-1
APPENDIX D	ILLUSTRATED FIELD MANUFACTURE ITEMS LIST	D-1
APPENDIX E	STORAGE OF AIRCRAFT	
Section I	General Information	E-1
II	Flyable Storage	E-4
III	Short Term Storage	E-5
IV	Intermediate Storage	E-11
APPENDIX F	WIRING DIAGRAMS	F-1
INDEX		Index 1

CHAPTER 7

HYDRAULIC AND PNEUMATIC SYSTEMS

Section I. HYDRAULIC SYSTEM

7-1. HYDRAULIC SYSTEM.

NOTE

The use of any alcohol in cleaning components which contact hydraulic fluids is prohibited. Formation of a polymeric residue can result which could impair mechanical operation of the components.

NOTE

All preformed packings and threads will have a light film of hydraulic fluid (C130) or (C131) applied prior to assembly. Ensure that parts are clean.

7-2. Description — Hydraulic System. a. The flight control hydraulic system provides power to operate flight control power cylinders. A gravity feed reservoir is used. The basic system includes a variable delivery axial-piston pump, reservoir, filter, relief valve, solenoid valve, directional flow check valves, servo valves, irreversible valves, power cylinders, pressure switch, low pressure caution light, couplings for connection of a ground test stand and connecting lines and a control switch located on the pedestal (figure 7-1).

b. The pump is located on the transmission sump case and is accessible through a removable panel on right side of pylon island. Access to the gravity feed reservoir is by opening transmission fairing on cabin roof. The ground test stand couplings are located in the engine compartment on the right side.

c. Additional equipment for helicopters with provisions for external stores includes a solenoid valve in the pressure line, a filter and check valve in the return line, and couplings with quick-disconnect fittings for connection of external stores and armament. The components are located in the pylon aft of the basic system equipment. The external stores couplings are located on the right and left sides of the fuselage just above the landing skid attachment points.

7-3. Operation — Hydraulic System. a. System pressure (figure 7-2) of 950 to 1000 psig is produced by the variable delivery, pressure compensated pump, mounted on the main transmission and driven at 0.65 engine drive shaft speed. Fluid is drawn from the resevoir by the hydraulic pump and pumped to the system through a check valve and a filter to a normally-open, solenoid-operated system shutoff valve. When the HYD CONTROL switch is ON, this valve is open and system pressure is supplied to all four of the flight control power cylinders. Each power cylinder assembly includes a servo valve which is mechanically controlled by the flight control linkages. When the linkage moves any servo valve control lever down, the cylinder retracts and when the linkage moves the lever up the cylinder extends. When the lever is centered, system pressure is applied equally to both sides of the cylinder piston but the system return port is shut off and cylinder does not move in either direction. Irreversible valves are provided for each main rotor power cylinder to prevent feedback. When system pressure drops to approximately 500 psi, a spring loaded sequence valve (view A), sheet 2 in the irreversible valve closes and blocks both the system pressure and system return ports trapping fluid under 500 psi in the power cylinder servo valve and irreversible valve. Each irreversible valve incorporates a check valve to isolate surge pressure produced in the power cylinders from the system pressure lines. A differential relief valve opens automatically to relieve pressures in excess of 500 psi differential. The irreversible valves also incorporate another feature which allows the power cylinders to be operated manually. The same function is performed by the check valve which interconnects the system pressure line to the system return line adjacent to the tail rotor power cylinder. When no system pressure is available and the power cylinders are operated manually, fluid flows directly through the irrevers-

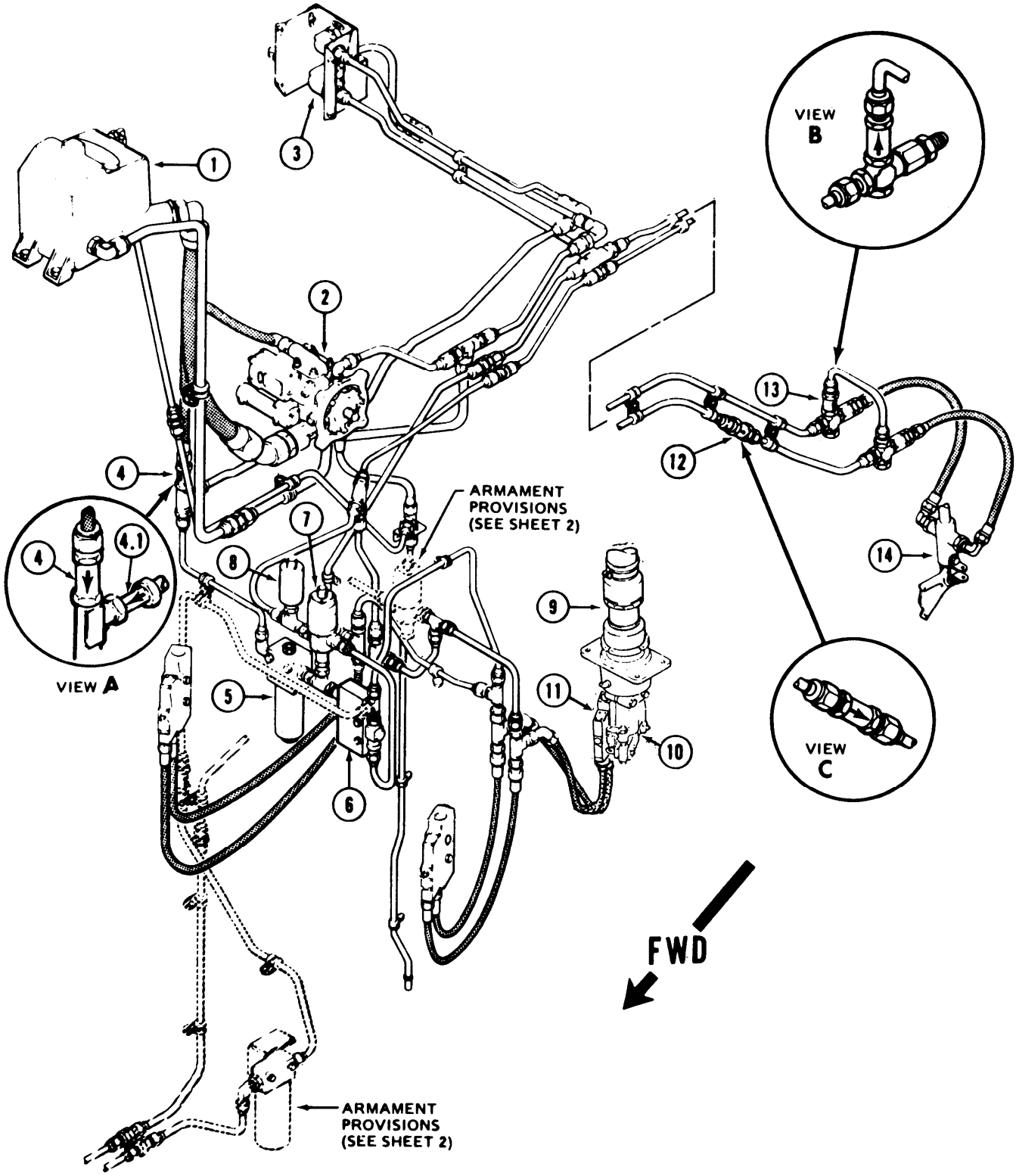

Figure 7-1. Hydraulic System — Flight Controls (Sheet 1 of 2)

ible valve or the tail rotor check valve from the cylinder return part to the cylinder pressure. Hence the cylinder pumps fluid from one side of the piston to the other without attempting to pump fluid through the entire system. The pressurized reservoir hydraulic system is no longer approved for use in UH-1 helicopters.

b. A line-mounted pressure switch is provided in the system pressure line to sense the system pressure. The switch closes a circuit to the caution

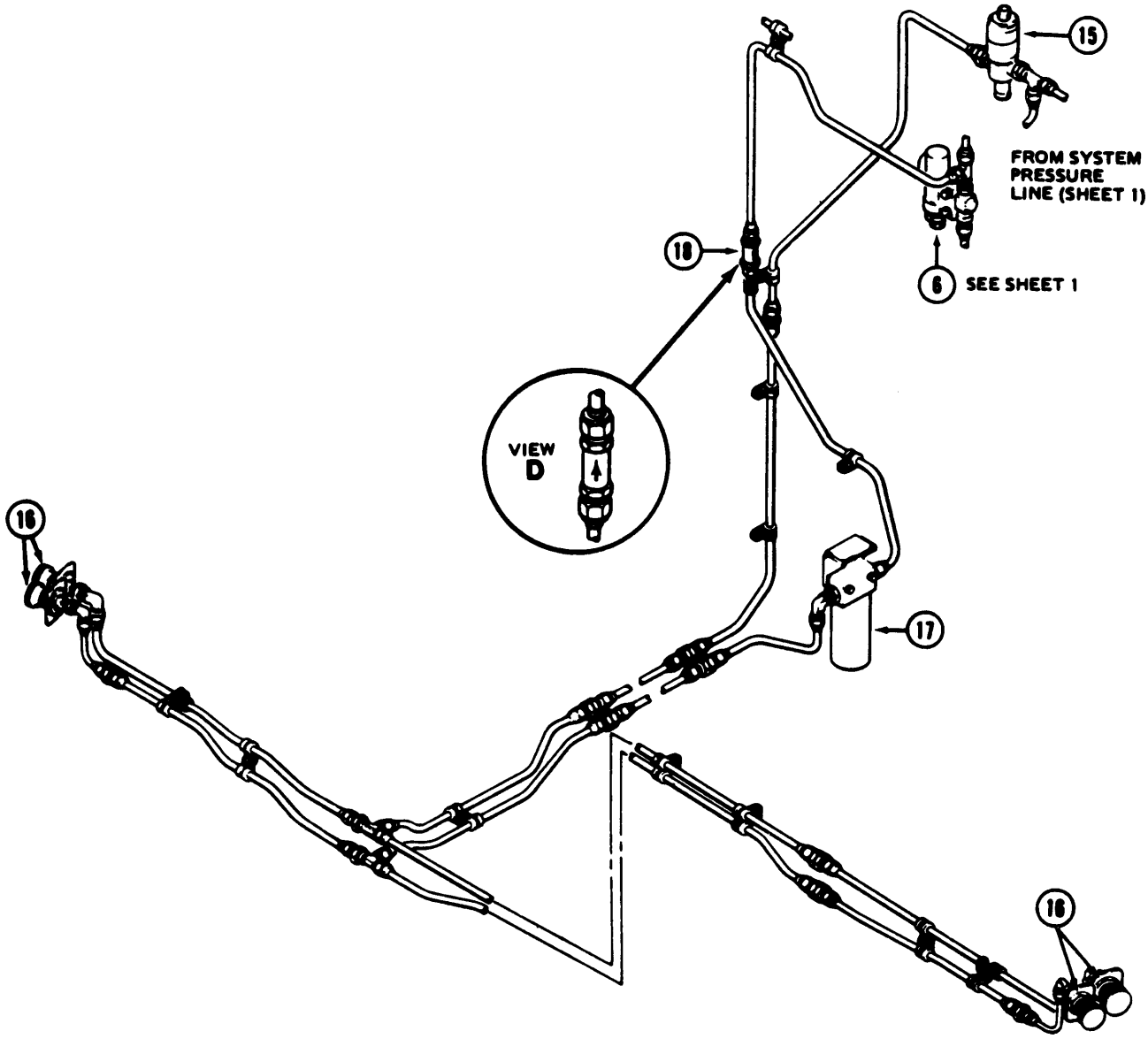

1. Reservoir
2. Pump
3. Test couplings
4. Check valve
4.1. Check valve
5. Filter
6. Relief valve
7. Solenoid valve
8. Pressure switch
9. Power cylinder (typical three places)
10. Servo control valve
11. Irreversible valve
12. Check valve
13. Check valve
14. Tail rotor cylinder valve
15. Armament shutoff solenoid valve
16. Couplings for external armament
17. Armament line filter
18. Check valve

Figure 7-1. Hydraulic System — Flight Controls (Sheet 2 of 2)

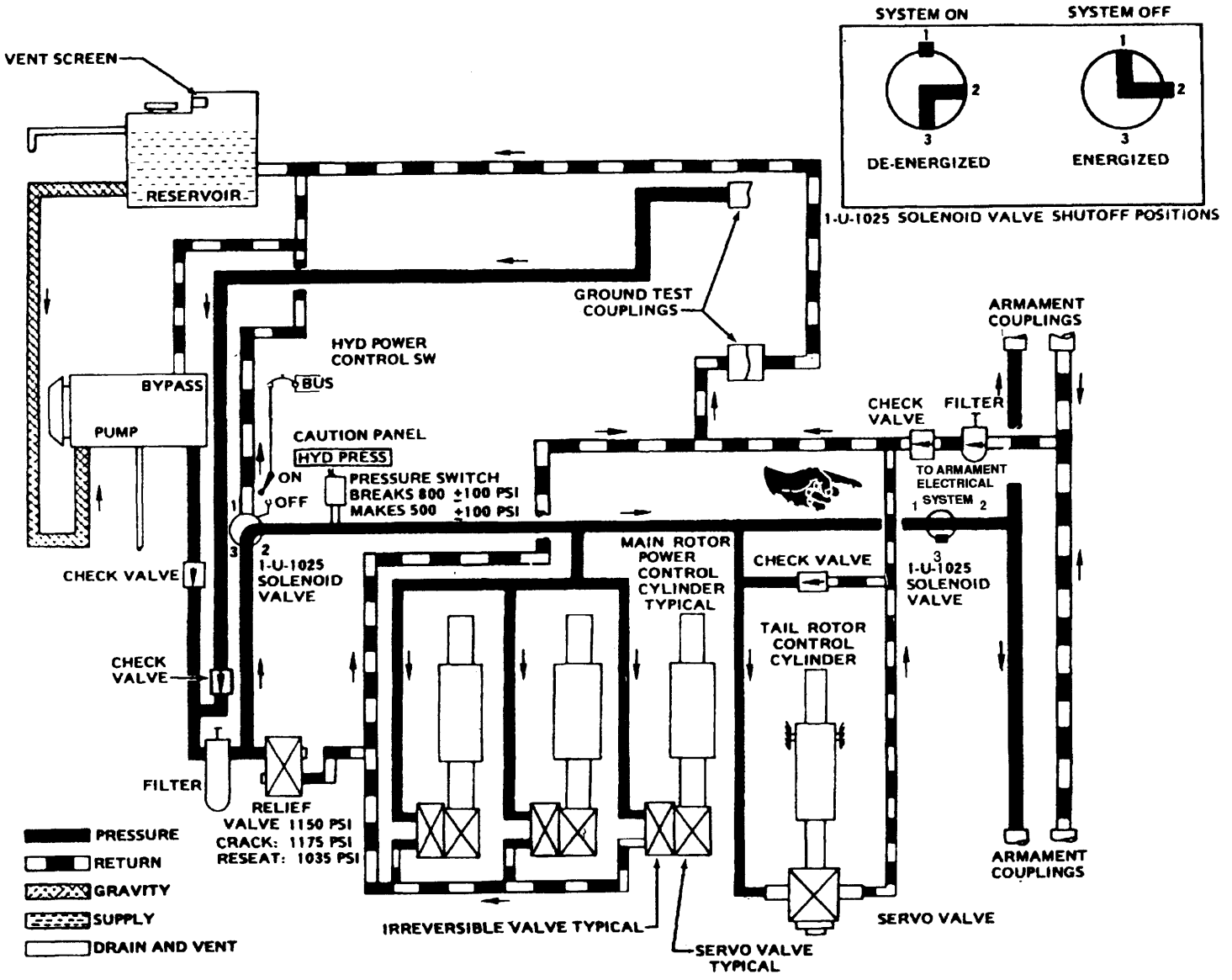

Figure 7-2. Hydraulic System Schematic (Gravity Feed) (Sheet 1 of 2)

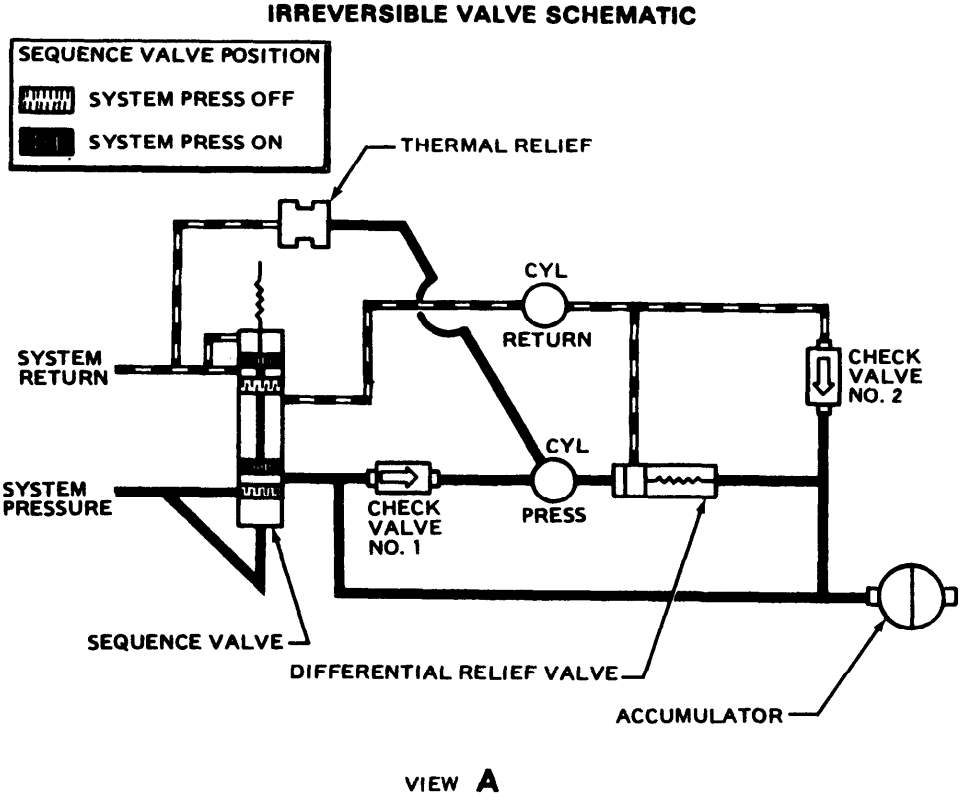

Figure 7-2. Hydraulic System Schematic (Gravity Feed) (Sheet 2 of 2)

panel when the system pressure drops below 400 psig and causes the **HYD PRESSURE** caution light and the **MASTER CAUTION** light to be illuminated. When pressure is increasing, the switch should open at 900 psig maximum.

c. On helicopters, serial nos. 63-12956 thru 65-10135, 65-12773 thru 65-12776, 65-12847 thru 65-12852, and 65-12857 thru 65-12895, with provisions for externally mounted armament, pressure is supplied to a normally-open solenoid valve which is controlled by a switch on an armament control panel. When the valve is open, hydraulic fluid is supplied to the external couplings on each side of the helicopter. When external hydraulic equipment is connected, fluid used to operate the equipment is returned through a filter and check valve to the hydraulic reservoir.

d. The following provides guide lines for allowable external leakage of in-service hydraulic system components, and some methods of measuring such leakage.

(1) Scope — Limits described are only for components in service in helicopter hydraulic systems. Intent is to minimize replacement of hydraulic components which are still serviceable.

(a) These limits may differ from those contained in various military specifications for components, which are intended to control quality, assembly, and proper functioning of the components for procurement. Components in service sometimes develop leakage rates in excess of specification limits, without necessarily becoming detrimental to the system or failing to provide reliable operation.

(b) These limits are not to be used as basis for acceptance or rejection of components of any bench functional test or systems on new helicopters.

(c) These limits are not applicable to self-contained closed-compartment hydraulic units such as viscous dampers, liquid springs, or oleo struts.

(2) Causes of Leakage — Some seepage is normally present, since static or dynamic seals are not functionally perfect, due to such causes as follows:

(a) A film of hydraulic fluid being retained by metal surfaces, such as piston rods, and thus carried past seals. This film is necessary for seal lubrication.

(b) Pressure and temperature variations affecting seals.

(c) Seals tending to take a permanent set after a period of time.

(3) Classification of Leakage — External leakages of hydraulic fluid can be broadly classified as excessive or allowable.

(a) Excessive Leakage: Fluid leakage such that hydraulic reservoir level may be dangerously lowered or depleted during normal operation, or a fire hazard may be created, or air-worthiness of helicopter may be otherwise compromised.

(b) Allowable Leakage: Fluid leakage such that quantity lost is insignificant, will have no detrimental effect on helicopter operation, and correction does not warrant maintenance time involved.

(c) General: Leakage usually shows as a seepage, stain, or wet area. It is possible for allowable leakage or seepage to collect in a cavity or depression in adjacent structure over a period of time and falsely indicate excessive leakage. Accumulation on a flat area or a white-painted surface often appears to be excessive, though actually being allowable. However, it is also possible to have enough components with allowable leakages that their combined leakage should be classified as excessive.

(4) Leakage Checks — Measurement of leakage rates, for classification according to Table 7-1 can be performed as follows:

(a) When hydraulic systems have remained in static unpressurized condition for an appreciable period of time, leakage checks should not be performed immediately after starting operation. Activate systems and operate components several times, then wipe off any leaked hydraulic fluid before making leakage checks.

(b) Where location of a component does not permit direct observation, it is possible to measure leakage on a flat surface (either part of structure below or a panel temporarily positioned for that purpose). Wipe surface clean and place a drop of fluid on area, allow to stabilize, then outline area with soft lead pencil before wiping off fluid. Pressurize and cycle the component to observe leakage rate, comparing wetted surface to marked one-drop area.

(c) Where fluid dropping from a component can be directly observed, pressurize and cycle the component until a drop falls free. Continue operating, observing time until next drop to determine leakage rate.

Table 7-1. Allowable Leakage for In-Service Hydraulic Components

COMPONENT	FUNCTION	LEAK TYPE	LEAKAGE RATE (Max.)
FLIGHT CONTROLS ACTUATORS	Rod Seal	D	1 drop/20 full stroke cycles
		S-D	1 drop/15 min.
	End Cap	S	2 drops/day
	Valve Input	D	1 drop/5 cycles
		S-D	1 drop/5 min.
	Pressure Switch	S-D	1 drop/5 min.
	Valve Body (Weep Hole)	S-D	1 drop/5 min.
PUMP	Output Shaft	D	8 drops/min.
		S-D	1 drop/min.
	Housing (Mating Surfaces)	S	2 drops/day
SWIVELS	Low Pressure	S	1 drop/15 min.
	High Pressure	D	1 drop/5 cycles
		S	1 drop/15 min.

Table 7-1. Allowable Leakage for In-Service Hydraulic Components (Cont)

COMPONENT	FUNCTION	LEAK TYPE	LEAKAGE RATE (Max.)
VALVES	Body (Weep Hole)	S	2 drops/day
	Manual Stem	D	1 drop/5 cycles
		S-D	1 drop/15 min.
	Dump Valve	S	2 drops/day
FITTINGS	Flared or Flareless	S	None
	Compression Seal	S	1 drop/30 min. (less if readily accessible)

NOTES: 1. Leaks Types: D = Dynamic
S = Static
S-D = Static leakage through dynamic seals.
2. Approx. 20 drops -1 cubic centimeter.
3. Components in static condition, as in parked aircraft, are allowed maximum leakage of two drops per seal or packing per day.

(d) For tests requiring long periods of time and where fluid can drop, wipe surface clean and dry without using a solvent. Use a clean blotter or white cloth after system has operated or has been idle the required period of time.

7-4. Testing - Hydraulic System. Testing of the hydraulic system may be accomplished by attaching a hydraulic test stand to the test connectors (located on right side of helicopter, forward of engine) and auxiliary power unit in accordance with the following procedures. Premaintenance requirements for testing of hydraulic system are as follows:

CAUTION

Use of hydraulic ground test equipment, with any flight control tube disconnected, may result in damage to swashplate, scissors and sleeve assemblies.

Premaintenance requirements for testing of hydraulic system

Conditions	Requirements
Model	All
Part No. or Serial No.	All
Special Tools	None
Test Equipment	Hydraulic Test Stand
Support Equipment	Auxiliary Power Unit Work Stand
Minimum Personnel Required	Two
Consumable Materials	(C130 or C131) (C155)
Special Environmental Conditions	Temperature/ Dust Free/ Well Ventilated Area

a. Using auxiliary power unit and hydraulic test stand, functional test hydraulic system as follows:

NOTE

Adjust hydraulic test stand pressure to 1175 psig. Adjust rate of flow to 6 GPM.

(1) Apply 1050 psig pressure to system and maintain for at least 15 minutes; meanwhile make following checks.

(a) Leakage: Observe all portions of system for external leakage. Repair as necessary.

(b) Clearance: Slowly cycle all controls to limits of stroke and observe movement of hydraulic servo cylinders. Clearances of all moving parts should be such that no fouling can occur. Check flexible connections carefully to be sure chafing or pinching of hoses does not occur, and that vibration does not loosen attaching fittings.

(2) Check operation of **HYD PRESSURE** caution panel light.

(a) Apply electrical power to helicopter.

(b) Position HYD control switch to on.

(c) Slowly decrease hydraulic test stand pressure. Light should illuminate when pressure reaches 600 to 400 psig.

(d) Slowly increase pressure. Caution panel light should extinguish when pressure reaches 700 to 900 psig.

(3) With system pressure at 1050 psig, place HYD CONTROL switch to OFF to test operation of solenoid valve. Actuate cyclic, collective, and tail rotor controls, Caution panel light should illuminate, and more force should be required to operate controls if valve closed properly to shutoff hydraulic power assistance.

(4) Check operation of pressure relief valve in hydraulic system. While operating pressure is slowly increased, place hand on relief valve to determine when it opens. Valve should open between 1100 and 1200 psig.

(5) Check operation of each irreversible valve.

(a) Slowly increase hydraulic pressure until it can be determined that control systems are functioning with hydraulic power. Change over from mechanical to hydraulic operation should occur at 500 psig minimum.

(b) Reduce pressure to zero.

(c) Check for irreversibility by moving each servo valve control lever to up (extend) or down (retract), then apply approximately 100 pounds force to the power cylinder extension tube and try to move cylinder in direction opposite to servo valve position. Cylinder should not move.

(d) After pressure has been reduced to zero for 3 minutes, examine irreversible valve and servo valve on each cylinder for evidence of leakage.

(6) When test is complete, remove auxiliary power unit, refill and bleed system as necessary:

(7) Disconnect hydraulic test stand from ground test coupling.

(8) Attach return line from reservoir to hydraulic test stand coupling.

NOTE

When a hydraulic test stand is not available, the transmission-driven hydraulic pump can be used to perform operational checks and to bleed the hydraulic system. Operation of the engine shall be performed in accordance with instructions contained in TM 55-1520-210-10.

b. Perform operational checks and bleed hydraulic system as follows:

CAUTION

Full movement of cyclic at lower rotor rpm may damage the main driveshaft.

(1) Start and ground-run the helicopter TM 55-1520-210-10).

NOTE

Ensure the hydraulic system has been bled and serviced (paragraphs 7-6 and 7-8).

(2) Increase engine speed to 6000 RPM. Make the following checks:

(a) Observe all hydraulic fittings and components for evidence of external leakage.

(b) Repair or replace components and fittings as necessary to correct leakage.

(c) Slowly cycle all (fore and aft, lateral and collective) controls and observe movements of hydraulic cylinder assemblies. No fouling should occur.

(d) Check flexible hoses and hose connections to ensure that pinching and chafing of hoses does not recur.

(e) Place HYD CONTROL switch to OFF. Solenoid valve should energize and dose. Caution panel HYD PRESSURE light should illuminate, and more force should be required to operate the controls.

(3) Refill and bleed system as necessary (paragraphs 7-6 and 7-8).

7-5. Flushing-Hydraulic System. The complete system must be thoroughly flushed as follows:

WARNING

Prolonged contact with liquid or mist can irritate eyes and skin. After any prolonged contact with skin, immediately wash contacted area with soap and water. If liquid contacts eyes, flush immediately with dear water. If liquid is swallowed, do not induce vomiting; get immediate medical attention. Wear rubber gloves when handling liquid. If prolonged contact with mist is likely, wear an appropriate respirator. When fluid is decomposed by heating, toxic gases are released.

CAUTION

Ensure hydraulic fluid in test stand is same type fluid as in aircraft.

NOTE

Prior to flushing hydraulic system functionally check hydraulic test stand to insure that it is operating properly. Install new filter elements in the test stand. Fill test stand reservoir to capacity with dean hydraulic fluid. Inspect test stand pressure and return hoses.

a. Disconnect hoses from three irreversible valves and from tail rotor control boost cylinder. Connect hoses together using part number MS21916D5-4 reducers. Cap ports to irreversible valves to prevent entry of dirt.

b. Remove fitter element from filter assembly (paragraph 7-48). Install bowl on filter head and tighten.

c. Connect hydraulic test stand hoses to inlet and outlet test fittings on the helicopter.

d. Inspect complete hydraulic system for attachment and security of components.

e. Set hydraulic test stand pressure to 1175 psig and flush for five minutes to dean the system.

f. Throughout the operation observe all portions of system for evidence of external leakage.

g. Shut down hydraulic test stand and connect hoses to irreversible valves and cylinders. Service aircraft reservoir to overflow with dean hydraulic fluid.

h. Install new filter element, tighten bowl and secure with lockwire (C155).

i. Bleed system (paragraph 7-6).

j. If contamination still exists in the hydraulic system after the system has been flushed, the system must be reflushed to include the collective, cyclic, and tail rotor actuator assemblies. Flushing of the collective, cyclic and tail rotor actuator assemblies can only be accomplished at the next higher maintenance by complete disassembly and reassembly.

7-6. Bleeding-Hydraulic System. a. Using helicopter power (refer to TM 55-1520-210-1 O), bleed hydraulic system as follows:

CAUTION

Full movement of cyclic at lower rotor rpm may damage the main driveshaft.

(1) Start and ground-run helicopter (TM 55-1520-210-10).

(2) Cycle tail rotor pedals and cyclic and collective controls a minimum of 10 times with main rotor turning at engine idle. Shut down engine.

(3) Service reservoir to overflow with hydraulic fluid (C130 or C131).

b. Using hydraulic test stand, bleed hydraulic system as follows:

(1) Connect hydraulic test stand to connectors (located right side of helicopter, forward of engine). With hydraulic test stand operating, decrease hydraulic test stand pressure to 1000 psig.

(2) Cycle tail rotor pedals and cyclic and collective controls a full stroke a minimum of 10 times to bleed air from system.

(3) Fill reservoir to overflow with hydraulic fluid (C136 or C131).

7-7. Troubleshooting — Hydraulic System. Conditions, test and inspections, and corrective actions for the hydraulic system are as follows:

NOTE

Ensure that all normal operational checks have been performed prior to using the following table 7-2. Any malfunctions not listed require assistance of next higher level of maintenance.

Table 7-2. Troubleshooting of Hydraulic System

CONDITION

TEST OR INSPECTION

CORRECTIVE ACTION

1. Rotor tends to turn when operating hydraulic test stand (on UH-1H/V serial numbers 62-2106 through 64-13901 only).
   Check valve (4, figure 7-1) in pressure line of pump not seating or installed backward.
   STEP 1. Check valve (4, figure 7-1) in pressure line of pump not seating or installed backward.

   Replace check valve or remove and replace with correct flow direction (paragraphs 7-28 and 7-32).

2. Pump noisy.

   Pump case drain incorrectly installed on bottom of pump, causing air entrapment. Inherent noise of the newer pump P/N PV3-044-8 is considerably greater than the older yoke type. The noise does not indicate a pump malfunction, but is characteristic of the design.

   Install property (paragraph 7-24).

3. Excessive feedback to controls.

   STEP 1. Air in system.

   Bleed system (paragraph 7-6).

   STEP 2. Rotor not properly adjusted.

   Track and adjust rotor (paragraph 5-123).

   STEP 3. Loose cylinder bearing housing retaining nut or loose bushing set adjustment nut.

   Replace cylinder assembly (paragraph 7-71 or 7-84).

   Check adjustment on bushing sat nut (not applicable for KSP 6099-1 bearing) (paragraph 7-70, steps g. and h).

Table 7-2. Troubleshooting of Hydraulic System (Cont)

CONDITION

TEST OR INSPECTION

CORRECTIVE ACTION

STEP 4. Internal leakage in irreversible valve.

Replace irreversible valve (paragraph 7-102).

STEP 5. Loose or worn hydraulic cylinder bearing housing mounting studs.

Check condition of studs. Check for stripped threads. Tighten nuts and/or replace mounting studs. (AVIM.)

Tighten nuts and/or replace mounting studs. (AVIM.)

STEP 6. Excessive wear to KSP 6099-1 bearing.

Replace bearing (paragraph 7-72).

4. Cyclic/collective cylinder binds or does not operate smoothly.

Excessively tight cylinder support bushing set adjustment nut (not applicable to KSP 6099-1 bearing).

Lubricate cylinder support bearing, or adjust retainer nut (figure 1-2 or refer to paragraph 7-70, steps g. and h.).

5. Collective control stick will not stay in position.

Friction adjusted to low on collective stick.

Adjust friction (paragraph 11-27).

6. Tail rotor feedback in pedals.

Tail rotor servo mounting bearing loose or worn.

Replace bearing (paragraph 11-187 and figure 11-44).

7. High frequency vibration or chatter.

Damper bearing in bellcrank to tail rotor quadrant worn or deteriorated.

Replace bearing (paragraph 11-187 and figure 11-44).

8. Hydraulic system too hot.

STEP 1. Broken line.

Repair line, replace pump and flush system (paragraphs 7-21 and 7-5).

Table 7-2. Troubleshooting of Hydraulic System (Cont)

CONDITION

TEST OR INSPECTION

CORRECTIVE ACTION

STEP 2. Pump delivers excessive pressure.

Replace pump (paragraph 7-21).

STEP 3. Relief valve stuck open.

Replace valve and pump (paragraphs 7-41 and 7-21).

STEP 4. Pump case drain incorrectly installed.

Install properly (paragraph 7-23).

STEP 5. Check valve in irreversible valve sticking open.

Replace irreversible valve and pump (paragraphs 7-102 and 7-21).

9. Hydraulic control switch inoperative.

STEP 1. Faulty switch.

Replace switch (paragraph 9-5).

STEP 2. Faulty connections.

Repair connections (paragraph 9-5 and figure F33).

STEP 3. Defective wiring.

Replace wiring (paragraph 9-5 and figure F33).

STEP 4. Defective solenoid valve.

Replace solenoid valve (paragraph 7-62).

STEP 5. No hydraulic pressure.

Refer to caution panel worded segment HYD PRESSURE lighted indication of trouble.

10. Caution panel worded segment **HYD PRESSURE** illuminated.

STEP 1. Caution light system malfunction.

Perform operational check of HYD. PRESSURE light (paragraph 9-169).

STEP 2. Hydraulic pump failure.

Replace hydraulic pump (paragraph 7-21).

Table 7.2. Troubleshooting of Hydraulic System (Cont)

CONDITION

TEST OR INSPECTION

CORRECTIVE ACTION

11. Hydraulic oil leaks.

STEP 1. Worn gaskets, seals, or preformed packings.

Replace gaskets, seals, or preformed packings

CAUTION

Do not tighten leaky flareless fittings.

STEP 2. Leaking fittings.

Replace with new tube or hose assembly if nut, sleeve, or tubing or hose is defective.

STEP 3. Improper tightening, presence of foreign matter, or defective part.

Clean and remove all foreign matter.

NOTE

Threads of tube and hose connectors and fittings will have hydraulic fluid (C130 or C131) applied to them prior to torquing. Do not torque with threads dry. Hydraulic fluid serves as a seal also after fluid drys.

Tighten fitting nut with wrench until a sharp increase in torque is noted. Do not overtorque.

NOTE

If there is any doubt that the point of sharp torque increase has been reached, rapidly loosen and tighten the nut several times (use light torque) until certain that increase in torque is due to the sleeve and tube touching the fitting seat and is not due to thread friction.

Tighten nut and additional 1/6 of a turn (one hex flat), from point of sharp torque increase.

If leak is present, tighten nut additional 1/6 of a turn.

If leak still persists, remove tube or hose assembly and install new tube or hose assembly.

7-8. Servicing — Hydraulic System. Service reservoir (9, figure 7-3) to overflow with hydraulic fluid (C130 or C131) (paragraph 1-9).

7-9. HYDRAULIC RESERVOIR.

7-10. Description — Hydraulic Reservoir. The gravity feed hydraulic reservoir is a non-pressurized, magnesium allow unit with an approximate capacity of 5.3 pints at overflow, 2.5 pints at refill level and is mounted on the cabin roof, under the right side of transmission cowling. The reservoir has a filler cap, a filler screen, an internal baffle, a fluid level sight gage plug, a vent screen, an overflow scupper, a drain plug, and connections for suction, return, and pump bypass lines (figure 7-3).

CAUTION

Protective covers shall be installed on all open ports and lines.

7-11. Removal — Hydraulic Reservoir.

a. Open transmission cowling (2, figure 2-18) and engine cowls (6 and 7) for access.

b. Deleted.

c. Using a suitable container, remove plug (16) from reservoir (9). Drain a small quantity of hydraulic fluid from bottom of reservoir and inspect for contaminants. If contaminants are evident, flush system (paragraph 7-5). Remove preformed packing (15) from plug (16).

d. Disconnect hose assembly (20) from fitting (18). Install covers to fitting (18) and hose assembly (20).

e. Disconnect tube assembly (14) from fitting (13). Install protective covers to fitting (13) and tube assembly (14).

f. Disconnect tube assembly (21) from baffle (22). Install protective cover to tube assembly (21). Protect baffle (22) from foreign material.

g. Remove two nuts (19), six washers (2) and four bolts (1). Lift reservoir (9) from cabin roof.

7-12. Disassembly — Hydraulic Reservoir.

a. Remove cap assembly (6, figure 7-3), adapter (4) and strainer (5) from reservoir (9).

b. Remove baffle (22) from reservoir (9); remove preformed packing (25), ring (24) and nut (23) from baffle (22).

c. Remove fitting (13) from reservoir (9); remove preformed packing (10), ring (11) and nut (12) from fitting (13).

d. Remove fitting (18) from reservoir (9); remove preformed packing (17) from fitting (18).

e. Remove lockwire securing sight plug (7) to reservoir (9). Remove preformed packing (8) from sight plug (7).

f. Remove vent screen (3) from reservoir if screen is clogged or damaged.

7-13. Cleaning — Hydraulic Reservoir.

a. Flush interior of reservoir (9, figure 7-3) with solvent (C261) and air dry with clean filtered compressed air.

WARNING

Cleaning materials are flammable and toxic. Avoid skin contact and breathing of solvent vapors.

Protective goggles will be worn when blowing with compressed air. Do not allow more than 5 psi air pressure to come in contact with skin.

b. Clean strainer (5), vent screen (3), outside of reservoir, and all fittings with solvent (C261) and air dry with clean, filtered compressed air. Flush inside of reservoir with clean hydraulic fluid (C130 or C131).

Premaintenance Requirements for Hydraulic Reservoir

Conditions	Requirements
Model	All
Part No. or Serial No.	All
Special Tools	None
Test Equipment	Fluorescent Penetrant Method
Support Equipment	None
Minimum Personnel Required	Two
Consumable Materials	None
Special Environmental Conditions	None
References	TM 1-1520-256-23

7-14. Inspection — Hydraulic Reservoir.

a. Inspect reservoir (9, figure 7-3) as follows:

(1) Inspect cap assembly (6) and baffle (22) for damage. No cracks allowed to baffle (22). If a crack in the Baffle is suspected, refer to TM 1-1520-256-23, Technical Manual Aviation Unit Maintenance (AVUM) and Aviation Intermediate Maintenance (AVIM) manual nondestructive inspection procedures for UH-1 helicopter series.

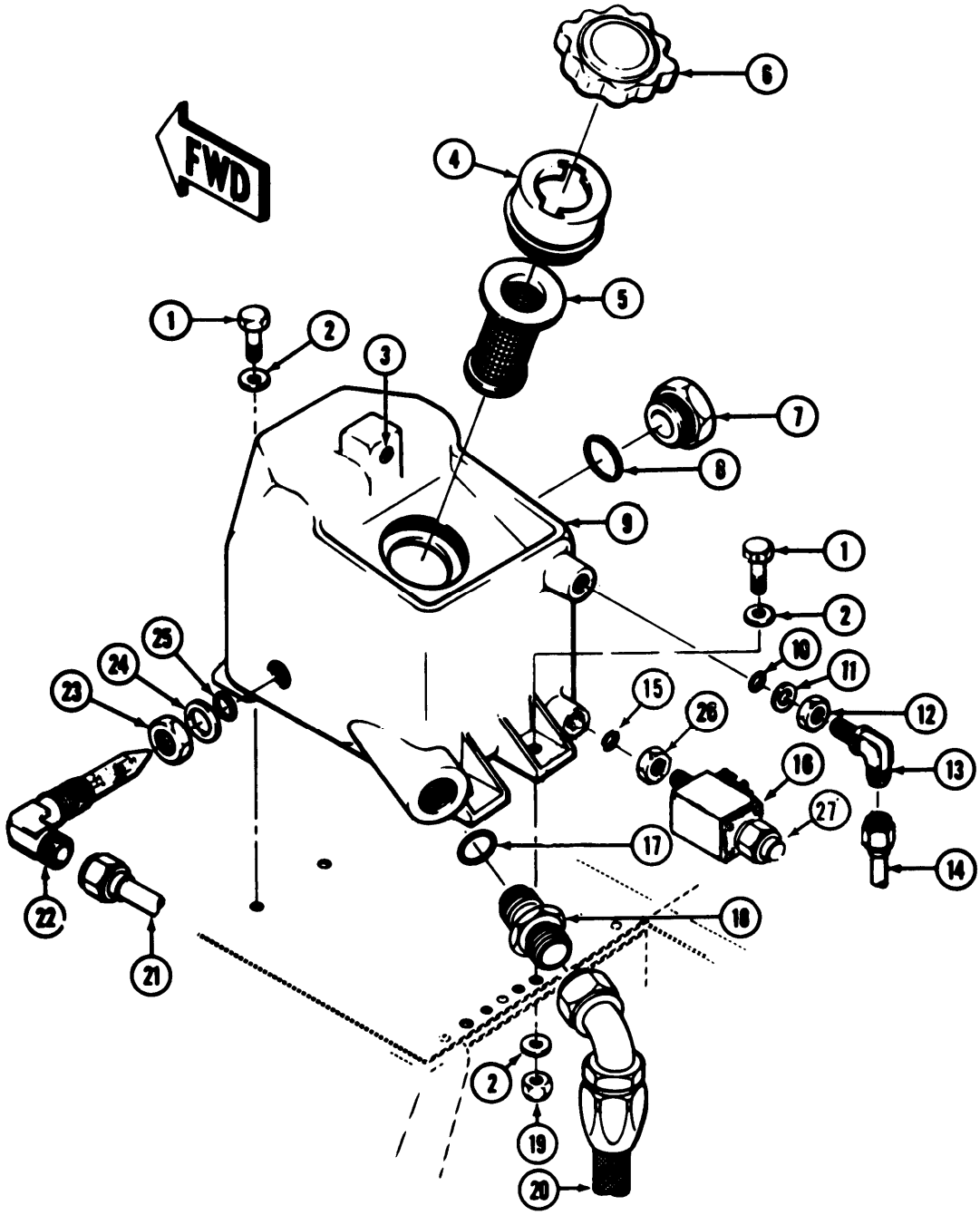

1. Bolt
2. Washer
3. Vent screen
4. Adaptor
5. Stralner
6. Cap assembly
7. Sight plug
8. Preformed packing
9. Reservoir
10. Preformed packing
11. Ring
12. Nut
13. Fitting
14. Tube assembly
15. Packing
16. Drain valve
17. Preformed packing
18. Fitting
19. Nut
20. Hose assembly
21. Tube assembly
22. Baffle
23. Nut
24. Ring
25. Preformed packing
26. Nut
27. Cap

FIGURE 7-3. Reservoir - Hydraulic System - Removal and Installation

(2) Inspect strainer (5) and vent screen (3) for rust, corrosion, cleanliness, cuts, and breaks. No damage allowed.

(3) Inspect sight plug (7), hose assembly (20), tube assemblies (14 and 21) and plug (16) for thread damage, cracks, dents, leaks, corrosion and loose, missing or improperly installed hardware. No cracks allowed. For treatment of corrosion, refer to TM 1-1500-204-23 series.

(4) Damage limits for each boss, port, or fitting are as follows:

(a) Depth — one-third of thread.

(b) Length — one-third of pitch diameter.

(c) Number of repairs: two per segment.

(d) No cracks allowed. If a crack in the fitting is suspected, refer to TM 1-1520-256-23, Technical Manual Aviation Unit Maintenance (AVUM) and Aviation Intermediate Maintenance (AVIM) manual nondestructive inspection procedures for UH-1 helicopter series.

(5) Maximum depth of repairable mechanical damage (reference nicks, scratches, gouges, dents, etc.) to the reservoirs (9) is **0.040** inch deep after cleanup. No cracks allowed.

(6) Corrosion damage to reservoirs (9) shall not exceed **0.020** inch in depth prior to cleanup and **0.040** inch in depth after cleanup.

(7) Inspect sight plug (7) for discoloration. Any discoloration is not acceptable.

(8) Inspect system for leaks.

(9) Inspect plug (16) and cap assembly (6) for proper locking and safetying.

(10) Inspect drain lines for obstruction.

b. Drain a small quantity of hydraulic fluid from bottom of reservoir and inspect for contaminants. If contaminants are evident, flush system (paragraph 7-5).

c. Inspect reservoir (9) and attaching components for cleanliness and proper security.

7-15. Repair or Replacement — Hydraulic Reservoir.

a. Any parts that fail inspection requirements outlined in above paragraph 7-14 require replacement without repair. For repair of corrosion damage to parts, refer to TM 1-1500-204-23 series.

b. Parts containing cracks require replacement without repair.

c. Replace sight plug (7, figure 7-3) if discolored.

d. Replace all preformed packings and rings.

7-16. Assembly — Hydraulic Reservoir.

NOTE

Flareless tubing connections shall be tightened as follows:

Tighten MS 21921 nut 1/6 to 1/3 turns (1/2 hex flats) past the point of sharp torque rise on all sizes and materials for all types of fittings or tubes.

The 1/6 to 1/3 turns (performed after the preset operation) is the final installation torque.

a. Install vent screen (3, figure 7-3) if removed, to reservoir (9) and point stake at three places (radial location is unimportant).

b. Install strainer (5) in reservoir (9). Apply a thin film of primer (C312) to threads of adapter (4) and install adapter to reservoir (9).

c. Install preformed packing (8) on sight plug (7) and install sight plug to reservoir. Secure sight plug to reservoir with lockwire (C155).

d. Place packing (17) on fitting (18) and install fitting to reservoir (9).

e. Install nut (12), ring (11), and packing (10) to fitting (13) and install fitting to reservoir.

f. Install nut (23), ring (24) and packing (25) to baffle (22) and install baffle to reservoir.

g. Insure drain valve (16) is closed.

h. Install cap assembly (6) to reservoir (9).

7-17. Installation — Hydraulic Reservoir.

a. Apply tape (C278) to lower side of mounting pads of reservoir (9, figure 7-3).

b. Install reservoir with four bolts (1), six washers (2) and two nuts (19).

NOTE

Bolt (1) with holes in head will be installed in hole of mounting pad adjacent to (drain) plug (16). Refer to table 1-5 for proper torquing of all fluid connections prior to installation.

c. Place nut (26) and packing (27) on drain valve (16) and install in drain hole of reservoir. Tighten nut to prevent leak. Install cap (27) on valve (16).

d. Remove protective cover from tube assembly (21) and connect tube assembly to baffle (22).

e. Remove protective cover from tube assembly (14) and connect tube assembly to fitting (13).

f. Remove protective cover from hose assembly (20) and connect hose assembly to fitting (18).

g. Service reservoir to overflow with hydraulic fluid (C130 or C131).

h. Bleed hydraulic system (paragraph 7-6).

i. Close transmission cowling (2, figure 2-18) and right engine cowls (6 and 7).

7-18. Painting — Hydraulic Reservoir. Touch-up repair areas with primer (C312) or primer (C206).

7-19. HYDRAULIC PUMP.

7-20. Description — Hydraulic Pump. The hydraulic pump (2, figure 7-1) is a variable-delivery, axial-piston unit mounted on a geared drive pad at right side of transmission accessory drive adjacent to the rotor tachometer generator. Four external parts of the hydraulic pump are provided for connecting suction, pressure, pump lubrication, and for seepage drain.

NOTE

Maximum allowable leakage for in-service components of the hydraulic pump is as follows:

Output shaft — dynamic — 8 drops/minute
Output shaft — static (through seal) — 1 drop/minute
Housing (mating surfaces) — static — 2 drops/day

7-21. Removal — Hydraulic Pump.

a. Remove right access door (24, figure 2-18) from pylon island in cabin area. Provide a suitable container to catch hydraulic fluid and place container under plug (16, figure 7-3).

b. Remove lockwire from plug (16).

c. Remove plug (16) and drain fluid from reservoir (9).

d. Disconnect hose assemblies from fittings (figure 7-4). Install protective covers on hoses.

(1) Hose (8) from fitting (9).

(2) Hose (18) from fitting (17).

(3) Hose (19) from fitting (20).

(4) Hose (24) from fitting (1).

e. Remove fitting (17) from pump assembly (13) and remove packing (14), ring (15) and nut (16) from fitting.

f. Remove fitting (20) from pump assembly (13) and remove packing (23), ring (22) and nut (21) from fitting.

g. Remove fitting (1) from pump assembly (13) and remove packing (6), ring (5) and nut (2) from fitting.

h. Remove fitting (9) from pump assembly (13) and remove packing (12), ring (11) and nut (10) from fitting.

i. Cap all open ports of pump assembly (13).

j. Remove four nuts (3), eight washers (4), pump assembly (13) and gasket (7) from transmission.

k. Remove container.

Premaintenance Requirements for Hydraulic Pump

Conditions	Requirements
Model	All
Part No. or Serial No.	All
Special Tools	None
Test Equipment	Fluorescent Penetrant Method Eddy Current Inspection Unit
Support Equipment	None
Minimum Personnel Required	Two
Consumable Materials	None
Special Environmental Conditions	None
References	TM 1-1520-256-23

7-22. Inspection — Hydraulic Pump.

a. Inspect pump assembly (13) for evidence of leakage.

b. Inspect pump assembly (13) for cracks, corrosion, dents, deep scratches or damage to splines of shaft. If damage is found, send pump to next higher maintenance level. No cracks allowed. If a crack in the pump Assembly is suspected, refer to TM 1-1520-256-23, Technical Manual Aviation Unit Maintenance (AVUM) and Aviation Intermediate Maintenance (AVIM) manual nondestructive inspection procedures for UH-1 helicopter series.

c. Inspect all fittings, nuts, and hoses for deterioration, cracks, corrosion, dents, and thread damage. No cracks allowed. If a crack in any of the Hydraulic System Components is suspected, refer to TM 1-1520-256-23, Technical Manual Aviation Unit Maintenance (AVUM) and Aviation Intermediate Maintenance (AVIM) manual nondestructive inspection procedures for UH-1 helicopter series.

d. Inspect pump assembly, nuts and hose and tube assemblies for security.

7-23. Repair or Replacement — Hydraulic Pump.

a. Replace unserviceable fittings (1, 9, 17 and 20, figure 7-4), hoses (8, 18, 19 and 24) and nuts (2, 3, 10, 16 and 21).

b. Replace all packings (6, 12, 14, and 23), rings (5, 11, 15 and 22), and gasket (7).

c. Replace pump assembly (13) if damage limits are exceeded or malfunction occurs, and forward pump to depot maintenance.

d. Any cracks to pump assembly requires replacement of pump.

7-24. Installation.

NOTE

Flareless tubing connections shall be tightened as follows:

Tighten MS21921 nut 1/6 to 1/3 turns (1-2 HEX flats) past the point of sharp torque rise on all sizes and materials for all types of fittings or tubes.

The 1/6 to 1/3 turns (performed after presetting operation) is the final installation torque.

Table 7-4. Hydraulic Pump Installation Data

	PUMP LINE LOCATIONS			
PUMP	CASE DRAIN	SEAL DRAIN	PRESSURE LINE	PUMP INLET
AA60321R	Top	Bottom-Inboard	****Top-Outboard	***Bottom-right
AA60321RA	Top	Bottom-Inboard	****Top-Outboard	***Bottom-right
AA65321RA	Top	Bottom-Inboard	****Top-Outboard	***Bottom-right
PV3-044-8	Top	Bottom-Inboard	Top-Outboard	Bottom
AP2V-55 and AP2V-77	Top	Bottom-Inboard	Top-Outboard	Bottom
57049	**Top	*Bottom-inboard	Top-Outboard	Bottom

* Connect to inlet marked UH-1D.

** Connect to case drain marked UH-1B.

*** Remove pump inlet fitting from pump and reinstall fitting facing to the right when required.

**** Assemble an MS21916D16-12 reducer and an MS28778-12 preformed packing in pressure line before installation in helicopter.

a. If replacing pump assembly, remove case drain plug from new pump and drain shipping preservation fluid.

b. Refill pump assembly with clean hydraulic fluid (C130 or C131) and install case drain plug. Secure case drain plug wih lockwire (C155).

c. Remove protective caps from all open ports.

d. Install nut (10, figure 7-4), ring (11), and packing (12) to fitting (9) and install fitting to pump assembly (13).

e. Install nut (2), ring (5), and packing (6) on fitting (1) and install fitting on pump assembly (13).

f. Install nut (21), ring (22), and packing (23) on fitting (20) and install fitting on pump assembly(13).

g. Install nut (16), ring (15), and packing (14) *on* fitting (17) and install fitting on pump assembly(13).

h. Apply grease (C129) or compound (C47) to pump shaft splines and splines of quill pad.

i. Position gasket (7) and pump assembly (13) on studs of drive pad on right side of transmission sump

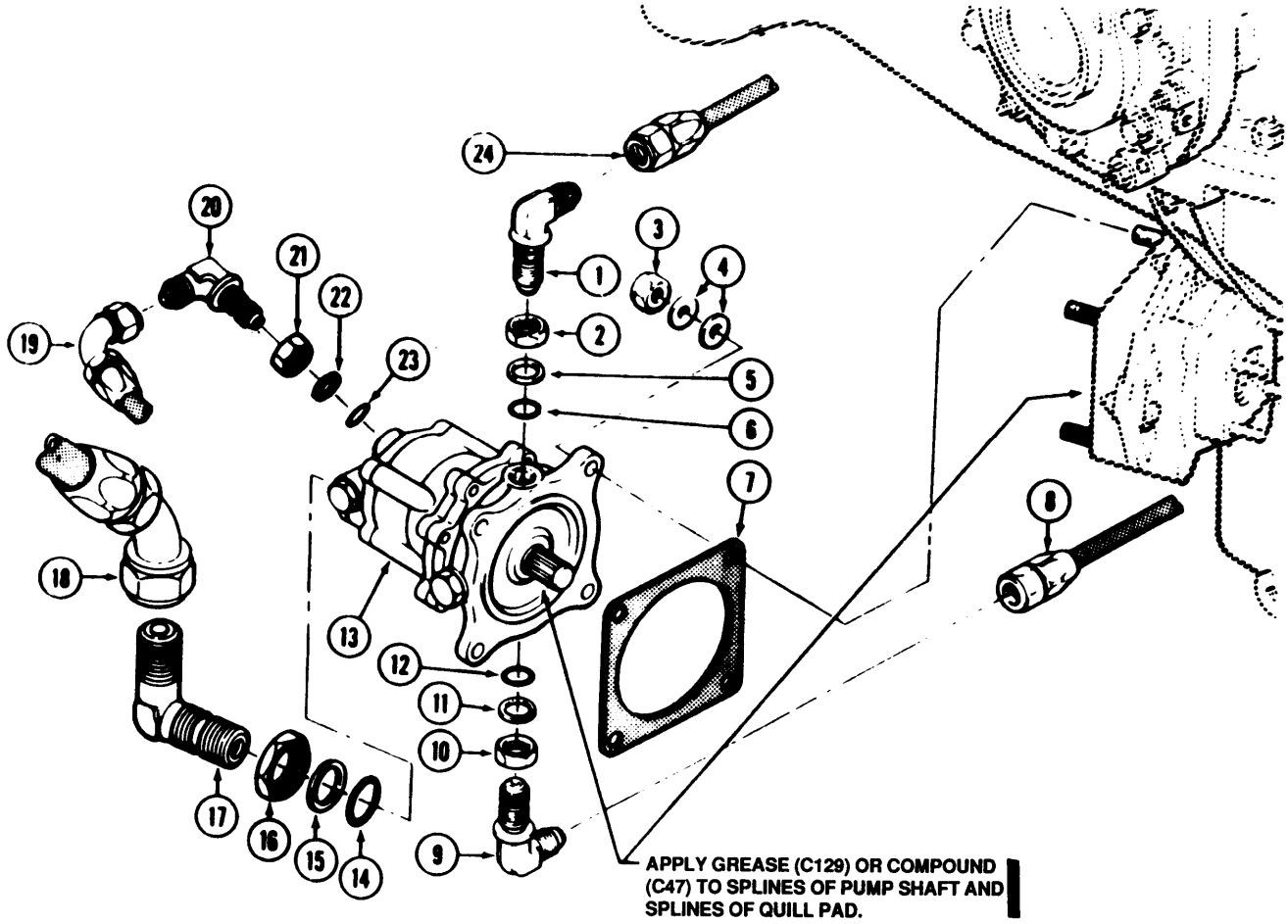

1. Fitting
2. Nut
3. Nut
4. Washer
5. Ring
6. Preformed packing
7. Gasket
8. Hose assembly
9. Fitting
10. Nut
11. Ring
12. Preformed packing
13. Pump Assembty
14. Preformed packing
15. Ring
16. Nut
17. Fitting
18. Hose Assembly
19. Hose Assembly
20. Fitting
21. Nut
22. Ring
23. Preformed packing
24. Hose Assembly

Figure 7-4. Hydraulic Pump Removal Installation

case, engaging pump shaft in splined gearshaft Install eight washers (4) and four nuts(3) Torque nuts (3) **120 TO 145** Inch-pounds.

j. Remove protective cover from hose assembles (8), (18), (19), and (24) Connect hose assemblies to fittings.

(1) Hose (8) to fitting (9)

(2) Hose (18) to fitting (17).

(3) Hose (19) to fitting (20).

(4) Hose (24) to fitting (1).

k. Fill hydraulic reservoir (9, figure 7-3) to normal level with clean hydraulic fluid (C130) or C131).

NOTE

With pump installed, placarded plug is located on top, left side, outboard portion of piston chamber.

NOTE

The following paragraph applies to AA-60321 series pumps only.

l. On gravity feed system, locate and remove placarded plug from top of pump piston chamber. Trapped air will be expelled from piston chamber when hydraulic fluid drains from plug port. After air is expelled, replace plug, and secure with lockwire (C155).

m. Bleed and test hydraulic system (paragraphs 7-4 and 7-6).

7-25. Test Procedures - Hydraulic Pump.

a. Start and ground run helicopter at flight idle (TM 55-1520-210-10). Functionally check operation of hydraulic pump assembly (13, figure 7-4).

b. Check for leakage of fittings or hose connections.

7-26. CHECK VALVES.

7-27. Description - Check Valves. Five check valves (figure 7-1) (four in hydraulic system and one in armament system) allow fluid to flow, one direction only, in lines during movement of flight controls.

7-28. Removal - Check Valves.

a. Remove soundproofing blanket and access door (81, figure 2-18) from pylon island in cabin area.

NOTE

A small amount of fluid will seep while breaking torque on tube and hose assembly connectors and will require placing a container under check valve.

b. Disconnect pump assembly hose from top of check valve (4, figure 7-1), located right, forward side of cargo hook lift beam. Install protective cap on hose assembly.

c. Remove check valve (4) from fitting (tee). Remove preformed packing from check valve.

d. Disconnect tube from check valve (4.1) and check valve from fitting (tee).

e. Remove lower, aft, fuselage door. Disconnect tube assemblies from forward and aft end of check valve (12) and remove check valve.

f. Disconnect tube assembly from top of check valve (13) and remove check valve from bulkhead fitting (tee). Remove preformed packing from check valve (13).

NOTE

The following procedural steps f. and g. pertain to helicopters with armament provisions installed only.

g. Remove access door (80, figure 2-18).

h. Disconnect tube assemblies from upper and lower end of check valve (18, figure 7-1) and remove check valve.

Premaintenance Requirements for Check Valve

Conditions	Requirements
Model	All
Part No. or Serial No.	All
Special Tools	None
Test Equipment	Fluorescent Penetrant Method
Support Equipment	None
Minimum Personnel Required	Two
Consumable Materials	None
Special Environmental Conditions	None
References	TM 1-1520-256-23

7-29. Inspection - Check Valves. Inspect check valves for cracks, corrosion, thread damage, evidence of leakage and security. No cracks allowed. If a crack in the Check Valves is suspected, refer to TM 1-1520-256-23, Technical Manual Aviation Unit Maintenance (AVUM) and Aviation Intermediate Maintenance (AVIM) manual nondestructive inspection procedures for UH-1 helicopter series.

7-30. Repair or Replacement - Check Valves.

a. Any evidence of cracks requires replacement of part. No repairs allowed.

WARNING

Use spray paint and chemical film material in a well ventilated area. Avoid contact and breathing spray mist.

b. Minor nicks, scratches, dents or corrosion to external surface of check valve is acceptable, provided damaged area is smoothed out using 600 grit sandpaper (C234) to original finish and touched-up with chemical film material (C62) followed with a light coat (by brush) of primer (C312) or primer (C206). Any corrosion to internal area or threads of check valve requires replacement of part.

c. Check security of check valves.

d. Replace check valve when there is evidence of fluid leakage (reference pin holes in valve body, due to internal corrosion damage) or corrosion damage to threads.

e. Replace check valve when malfunctioning occurs.

7-31. Test Procedures — Check Valves. Perform operational check of hydraulic system (paragraph 7-4).

7-32. Installation — Check Valves.

CAUTION

Ensure that directional flow arrow is pointing in right direction prior to installation (view A through D, figure 7-1).

NOTE

All fluid connections will be properly torqued in accordance with table 1-5.

NOTE

If hydraulic system for external armament hook-up is not incorporated in helicopter, proceed to step c.

a. Position and install check valve (18, figure 7-1) between upper and lower tube assemblies as shown in view D.

b. Connect and secure upper and lower tube assembly to check valve (18).

c. Install access door (80, figure 2-18).

d. Install packing to end of check valve (13, figure 7-1) that will be adjacent to fitting (tee). Position check valve (13) as shown in View B and install check valve to top side of outboard bulkhead fitting (tee).

e. Connect and secure tube assembly to check valve (13).

f. Position and install check valve (12) as shown in View C by connecting forward and aft tube assemblies.

g. Install access door (53, figure 2-18) to forward fuselage.

h. Install packing on end of check valve (4, figure 7-1) which installs adjacent to fitting (tee). Position and install check valve (4) as shown in View A to top side of fitting (tee).

i. Connect and secure pump hose assembly to top of check valve (4).

j. Install check valve (4.1) in fitting (tee) and connect tube to check valve.

k. Install access door (81, figure 2-18).

7-33. GROUND TEST CONNECTIONS.

7-34. Description — Ground Test Connections. Two ground test connections (figure 7-5) are provided for connection of hydraulic test stand to functionally check hydraulic and flight control systems.

7-35. Removal — Ground Test Connections.

a. Open right-side lower engine cowl (7, figure 2-18). Disconnect coupling half (9, figure 7-5) from coupling half (11). Place protective cover on coupling half (9).

b. Provide a container and place under connectors of tube assemblies (14 and 15) to catch fluid and disconnect tube assemblies from fittings (13 and 16).

c. Remove screws (1), washers (2), nuts (3), and bracket (18).

d. Remove test connectors and attaching components from brackets (6 and 18) as follows:

(1) Remove fitting (16) from fitting (23) and remove preformed packing (17) from fitting.

(2) Remove fitting (13) from fitting (24). Remove preformed packing (12) from fitting (13).

(3) Remove screws (4) and washers (5) from bracket (6) and remove bracket (6) from bracket (18).

(4) Break torque on nut (27); remove fitting (24) preformed packing (25), ring (26) and nut (27) from coupling half (7).

(5) Remove screws (8) attaching coupling half (7) to bracket (6) and remove coupling half.

(6) Break torque on nut (20); remove fitting (23), preformed packing (22), ring (21) and nut (20) from coupling half (11).

(7) Remove screws (10) attaching coupling half (11) to bracket (18) and remove coupling half.

(8) Remove coupling half (9) from hose assembly.

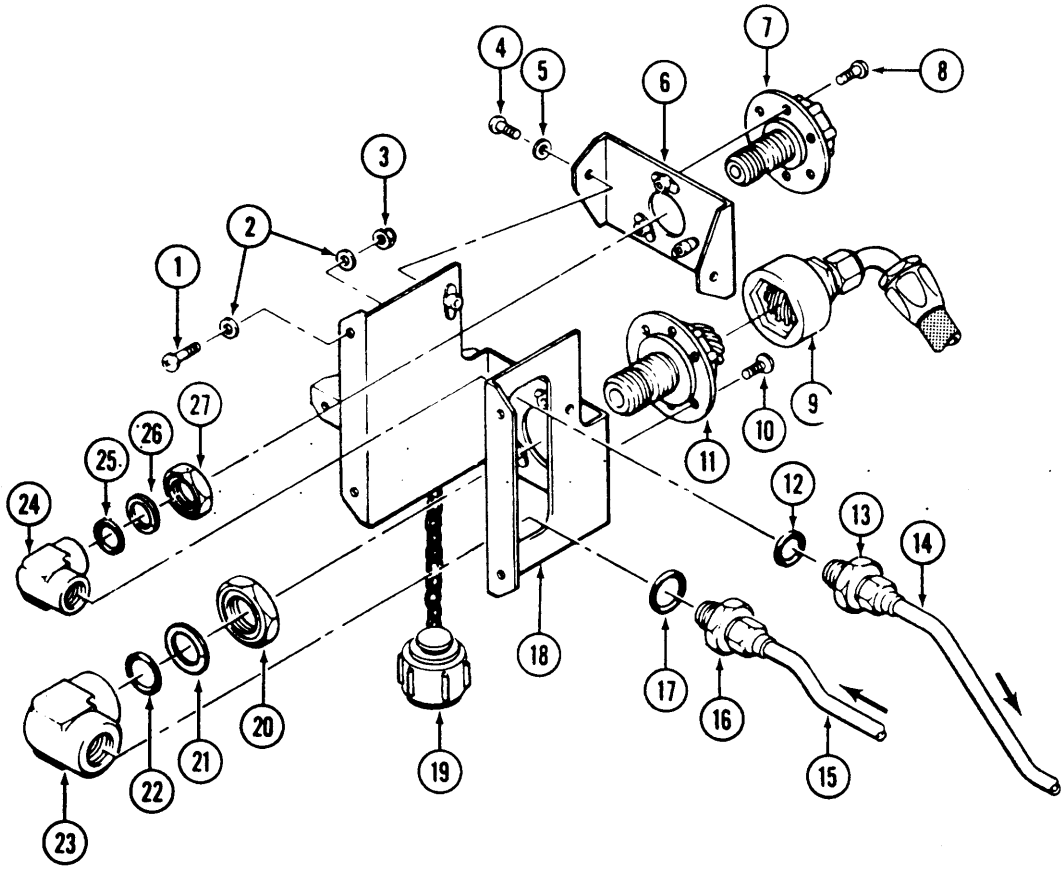

1. Screw
2. Washer
3. Nut
4. Screw
5. Washer
6. Bracket
7. Coupling half
8. Screw
9. Coupling half
10. Screw
11. Coupling half
12. Preformed packing
13. Fitting
14. Tube assembly
15. Tube assembly
16. Fitting
17. Preformed packing
18. Bracket
19. Cap assembly
20. Nut
21. Ring
22. Preformed packing
23. Fitting
24. Fitting
25. Preformed packing
26. Ring
27. Nut

Figure 7-5. Hydraulic Test Connections — Removed and Installed

Premaintenance Requirements for Ground Test Connections

Conditions	Requirements
Model	All
Part No. or Serial No.	All
Special Tools	None
Test Equipment	Fluorescent Penetrant Method
Support Equipment	None
Minimum Personnel Required	Two
Consumable Materials	None
Special Environmental Conditions	None
References	TM 1-1520-256-23

7-36. Inspection — Ground Test Connections.

a. Visually inspect coupling halves (7, 9 and 11, figure 7-5), cap assembly (19) and brackets (6 and 18) for cracks. No cracks allowed. If a crack in any of the Coupling Halves, Cap Assembly, or Brackets of the Ground Test Connections is suspected, refer to TM 1-1520-256-23, Technical Manual Aviation Unit Maintenance (AVUM) and Aviation Intermediate Maintenance (AVIM) manual nondestructive inspection procedures for UH-1 helicopter series.

b. Inspect fittings (13, 16, 23 and 24), coupling half (7, 9 and 11) and cap assembly (19) internally and externally for evidence of corrosion.

c. Inspect brackets (6 and 18) for damage in accordance with the following limits:

(1) No cracks allowed.

(2) Surface imperfections: (Nicks, scratches, corrosion, etc.) shall be blended into the surrounding surface. Minimum acceptable wall thickness after cleanup is **0.032** inch. Cleanup area not critical.

(3) Edge chamfer or dent: **0.060** maximum depth.

d. Inspect coupling halves (7, 9 and 11) and connections of attaching tube assemblies (14 and 15) for evidence of leakage.

7-37. Repair or Replacement — Ground Test Connections.

a. Any cracks or damaged threads to test couplings or attaching components requires replacement of part.

b. No corrosion allowed to interior areas of coupling half, fittings or tube assemblies. Replace corroded parts. No corrosion allowed on threaded area of parts.

WARNING

Use spray paint and chemical film material in a well ventilated area. Avoid contact and breathing spray mist.

c. Minor corrosion on exterior surfaces of tube assemblies, fittings, brackets or coupling halves is allowed, provided damaged areas are polished out with 600 grit sandpaper (C234), treated with chemical film material (C62), followed with a light coat of primer (C312) or primer (C206).

d. Any evidence of leaks to coupling halves requires replacement of part.

e. Replace all preformed packings.

7-38. Installation — Ground Test Connections.

a. Install coupling half (9, figure 7-5) to hose assembly.

b. Position coupling half (11) to bracket (18) and install screws (10).

c. Install nut (20), ring (21), packing (22) and fitting (23) to coupling half (11).

d. Position coupling half (7) to bracket (6) and install screws (8).

e. Install nut (27), ring (26), packing (25) and fitting (24) to coupling half (7).

f. Position bracket (6) to bracket (18) and install screws (4) and washers (5).

g. Install packing (12) on fitting (13). Install fitting (13) to fitting (24).

h. Install packing (17) on fitting (16). Install fitting (16) to fitting (23).

i. Position bracket (18) and install screws (1), washers (2) and nuts (3).

j. Connect tube assembly (14) to fitting (13).

k. Connect tube assembly (15) to fitting (16).

l. Disconnect hydraulic test stand from test connections. Connect coupling half (9) to coupling half (11) and ensure that both coupling halves are locked securely.

m. Connect cap assembly (19) to coupling half (7) and ensure that cap assembly is locked.

n. Bleed hydraulic system (paragraph 7-6).

o. Check ground test connectors and attaching components for leakage.

p. Close right lower engine cowl (7, figure 2-18).

7-39. RELIEF VALVE.

7-40. Description — Relief Valve. A relief valve, located on forward side of cargo hook lift beam (figure 7-6) relieves system pressure in excess of 1175 psi into the return circuit to prevent damage to the system or components. This relief valve acts as a safety device that monitors system pressure and must not be used to adjust system pressure.

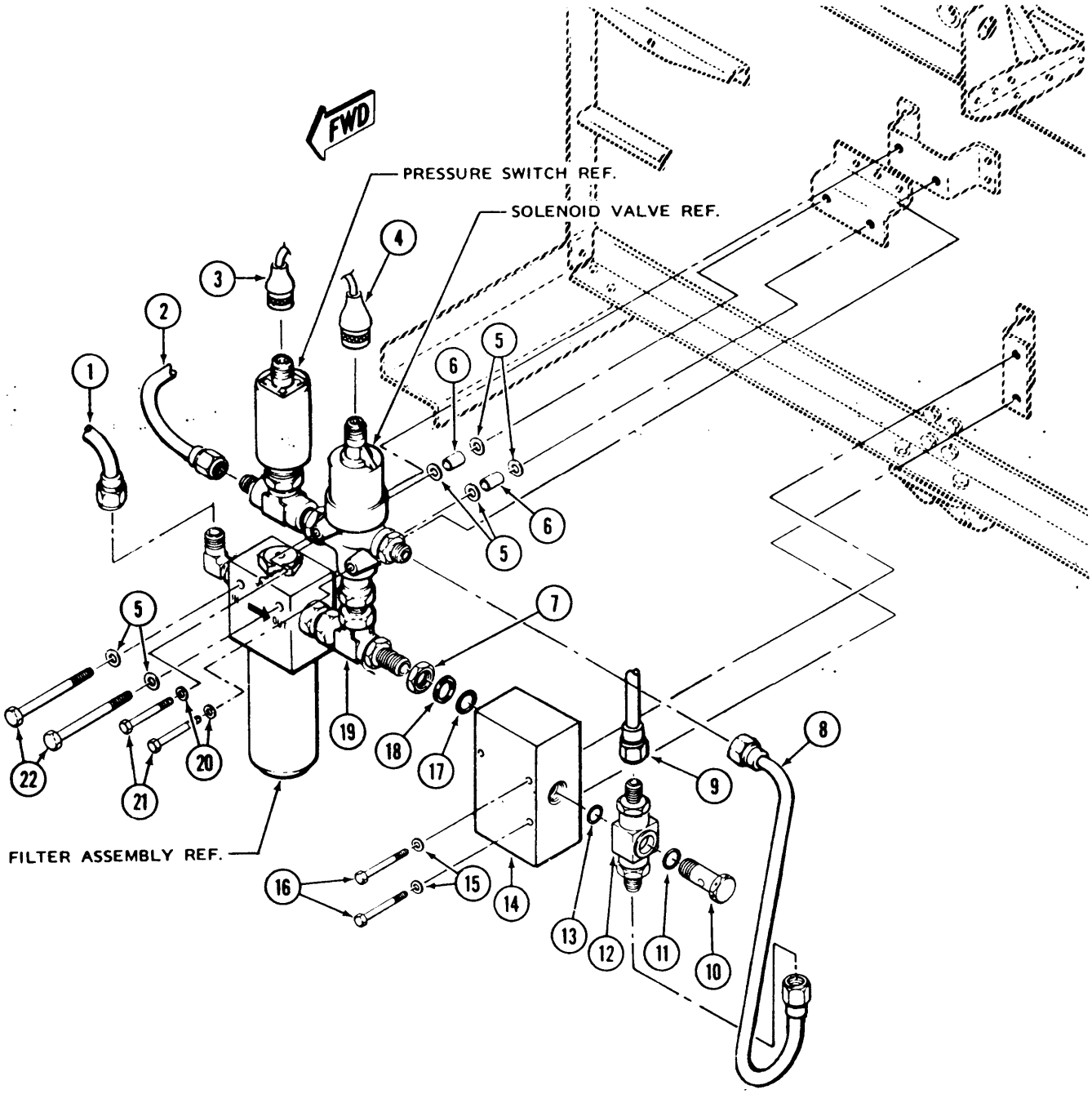

1. Tube assembly
2. Tube assembly
3. Electrical connector
4. Electrical connector
5. Washer
6. Spacer
7. Nut
8. Tube assembly
9. Tube assembly
10. Bolt
11. Preformed packing
12. Fitting
13. Preformed packing
14. Relief valve
15. Washer
16. Bolt
17. Preformed packing
18. Ring
19. Fitting
20. Washer
21. Bolt
22. Bolt

Figure 7-6. Hydraulic Relief Valve — Removal and Installation

7-41. Removal — Relief Valve.

a. Remove access door (81, figure 2-18).

a.1. Disconnect electrical connections (3 and 4) from pressure switch and solenoid valve.

b. Disconnect tube assemblies (1, 2, 8 and 9, figure 7-6) from hydraulic unit and cap all openings.

c. Remove bolts (16) and washers (15).

d. Remove bolts (21) and washers (20).

e. Remove bolts (22), washers (5), and spacers (6) attaching filter assembly to lift beam and remove filter assembly.

f. Place hydraulic unit on work bench. Remove lockwire from bolt (10). Remove bolt (10), preformed packing (11), fitting (12) and preformed packing (13) from relief valve (14).

g. Remove preformed packing (13) from bolt (10) and remove bolt from fitting (12). Remove preformed packing (11) from bolt (10).

h. Break torque on nut (7) and remove relief valve (14) from hydraulic unit.

i. Remove preformed packing (17) and ring (18) from fitting (19).

j. Cap open ports of valve (14).

Premaintenance Requirements for Relief Valve

Conditions	Requirements
Model	All
Part No. or Serial No.	All
Special Tools	None
Test Equipment	Fluorescent Penetrant Method
Support Equipment	None
Minimum Personnel Required	Two
Consumable Materials	None
Special Environmental Conditions	None
References	TM 1-1520-256-23

7-42. Inspection — Relief Valve.

a. Visually inspect relief valve (14, figure 7-6), bolt (10) and fitting (12) for cracks, deep gouges or scratches. No cracks allowed. If a crack in the Relief Valve, Bolt, or Fitting is suspected, refer to TM 1-1520-256-23, Technical Manual Aviation Unit Maintenance (AVUM) and Aviation Intermediate Maintenance (AVIM) manual nondestructive inspection procedures for UH-1 helicopter series.

b. Visually inspect relief valve (14) and bolt (10) for thread damage or corrosion.

c. Visually inspect tube assemblies for nicks, scratches, thread damage, dents or corrosion.

d. Visually inspect relief valve for evidence of leakage.

7-43. Repair or Replacement — Relief Valve.

a. Replace packings (11, 13 and 17, figure 7-6) and ring (18).

b. Replace relief valve (14) when malfunction occurs.

c. Any cracks to relief valve (14), bolt (10), fitting (12) requires replacement of part.

WARNING

Use paint and chemical film material in a well ventilated area. Avoid skin contact and breathing spray mist.

d. Minor corrosion, scratches or gouges to the external surface of relief valve are allowed, provided damaged areas are polished out with 600 grit sandpaper (C234) to original finish and treated with chemical film material (C62) followed with a light application (by brush) of primer (C312) or primer (C206).

e. Replace bolt (10), fitting (12) or relief valve (14) when corrosion exists in internal area of components.

f. Any corrosion damage to threaded areas of parts requires replacement of part.

g. Any evidence of leakage to the relief valve (14) requires replacement of part.

7-44. Test Procedures — Relief Valve. (paragraph 7-4).

7-45. Installation — Relief Valve.

a. Install ring (18, figure 7-6) and packing (17) to fitting (19).

b. Remove protective covers from ports of relief valve (14) and thread relief valve onto fitting (19). Tighten nut (7) against relief valve.

c. Install packing (11), fitting (12) and packing (13) on bolt (10), and install bolt and assembled parts to ports of relief valve (14). Secure bolt (10) with lockwire (C155).

d. Position hydraulic unit to forward side of cargo hook lift beam and install bolts (21) and washers (20).

e. Install bolts (16) and washers (15) to relief valve (14) and bracket on cargo lift beam.

f. Install bolts (22), washers (5) and spacers (6) to filter assembly and bracket on cargo lift beam.

g. Remove protective dust covers and connect tube assemblies (1, 2, 8 and 9).

h. Connect electrical connector (3) to pressure switch and secure with lockwire (C154).

i. Connect electrical connector (4) to solenoid valve and secure with lockwire (C154).

j. Install upper access panel and soundproofing blanket.

7-46. HYDRAULIC FILTER ASSEMBLY.

7-47. Description — Hydraulic Filter Assembly. The hydraulic filter assembly is a non bypass assembly (21, figure 7-7) that has a filter element with a filtering capability of at least 15 micron absolute. A red indicator is provided, to raise, when differential pressure across the element exceeds 70 plus or minus 10 psi and the indicator button is visible through a window on the pylon island in the cabin areas. The filter assembly is located on forward side of cargo. hook lift beam. An additional filter. assembly without red indicator (17, figure 7-1) Is installed in helicopters that have armament provisions.

7-48. Removal — Hydraulic Filter Assembly. a. Remove filter assembly (21, figure 7-7) as follows:

(1) Remove access door (81, figure 2-18).

CAUTION

Ensure protective covers are installed on all open ports to prevent entry of foreign material.

(2) Disconnect tube (1 and 2, figure 7-7)

(3) Disconnect tube assembly (10) Cover all open ports.

(4) Remove lockwire from electrical connectors (3 and 7) and remove electrical connectors

(5) Remove bolts (13) and washers (12) attaching relief valve to bracket on lift beam.

(6) Remove bolts (22), washers (4), and spacers (5) attaching filter assembly (21) to bracket on lift beam.

(7) Remove bolts (17) and washers (16) attaching solenoid valve to bracket and remove filter assembly (21) and attached components.

(8) Place assembly on workbench. Break torque on nut (8) and remove fitting (6) and pressure switch from solenoid valve, Remove preformed packing (9), ring (19) and nut (8) from fitting (6)

(9) Break torque on nut (15) and remove filter assembly (21) from fitting (14).

(10) Remove preformed packing (20), ring (18) and nut (15) from fitting (14).

(11) Break torque on nut (25) and remove fitting (26) from filter assembly (21) Remove preformed packing (23), ring (24) and nut (25) from fitting (26).

NOTE

Filter element replacement procedures are typical for both P/N MS28720-6 and 205-076-03-4-6 filter, assemblies, 205-076-034-7 filter element may be used in lieu of 206-076 -034-3 filter element,

(12) When replacement of filter element is required, disassemble filter assembly as follows:

NOTE

Three different filter assemblies are available for use. Refer to figure 7-7, sheet 2 differences and determine which filter is installed.

(a) Remove lockwire from bowl (30, figure 7-7)

(b) Place a container under filter assembly to catch fluid seepage. Remove bowl/element from head assembly (35).

(c) Drain fluid from bowl (30) and remove retainer (27) and element (29) from bowl.

(d) Remove preformed packing (28) from element (29).

(e) Remove two backup rings (36) and preformed packing (37) from head assembly (35).

(13) If indicator assembly (31) is being replaced, remove indicator assembly as follows:

(a) Remove lockwire, from indicator assembly (31) and remove indicator from head assembly (35).

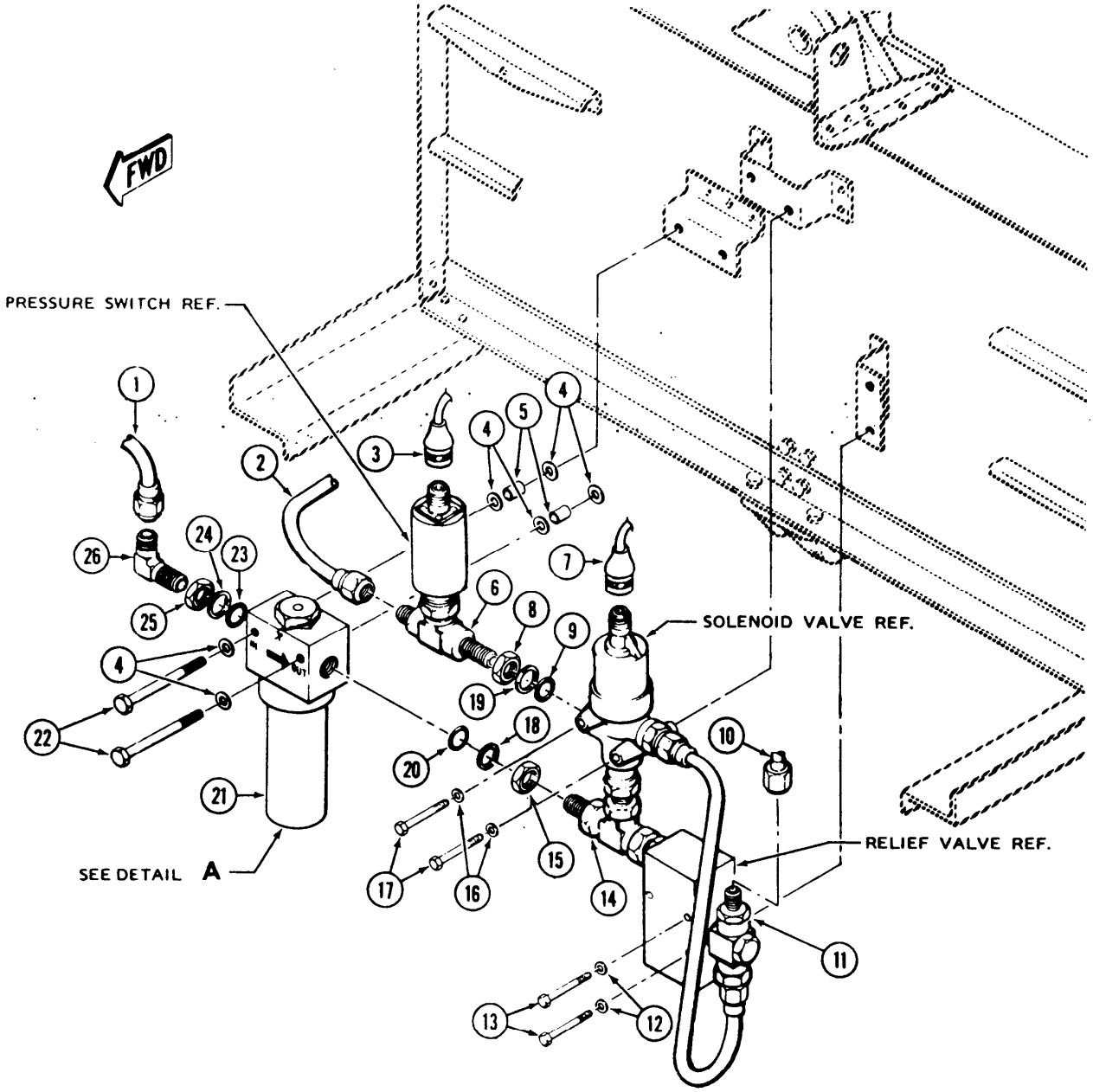

1. Tube assembly
2. Tube assembly
3. Electrical connector
4. Washers
5. Spacers
6. Fitting
7. Electrical connector
8. Nut
9. Preformed packing
10. Tube assembly
11. Fitting
12. Washers
13. Bolts
14. Fitting
15. Nut
16. Washers
17. Bolts
18. Preformed packing
19. Ring
20. Preformed packing
21. Filter assembly
22. Bolts
23. Preformed packing
24. Ring
25. Nut
26. Fitting

Figure 7-7. Hydraulic Filter Assembly – Removal and Installation (Sheet 1 of 2)

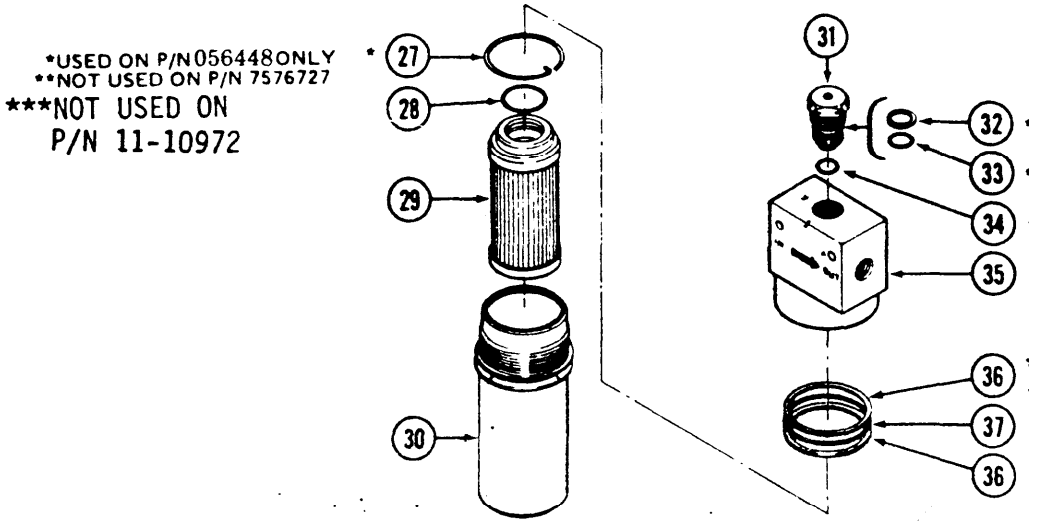

DETAIL A

(Bendix Part No. 056448 Shown)

27. Retainer
28. Preformed packing
29. Element assembly
30. Bowl
31. Indicator assembly
32. Back up ring
33. Preformed packing
34. Preformed packing
35. Head assembly
36. Back up ring
37. Preformed packing.

Figure 7-7. Hydraulic Filter Assembly – Removal and Installation (Sheet 2 of 2)

(b) Remove preformed packings (33 and 34) and backup ring (32) from indicator assembly (31).

NOTE

The following removal procedures apply to helicopters that have armament provisions.

b. Remove filter assembly (6, figure 7-8) as follows:

(1) Remove access door (73, figure 2-18).

(2) Place a container under fiter assembly (6, figure 7-8) to catch fluid seepage. Disconnect tube assemblies (3 and 13). Cover all open ports.

(3) Remove nuts (1), washers (2 and 8). and bolts (7) from filter assembly (6), and remove filter assembly.

(4) Remove fitting (4). Remove preformed packing (5) from fitting.

(5) Break torque on nut (11) and remove fitting (12) from filter assembly (6).

(6) Remove preformed packing (8), ring (10) and nut (11) from fitting (12).

(7) When replacement of filter element is required, disassemble filter assembly in accordance with paragraph 7-48, step a. (12).

NOTE

When ambient temperatures are below +20 degrees F (-6.7 degrees C) the indicator buttons may extend. Reset button after fluid warms up.

7-49. Inspection — Hydraulic Filter Assembly. a. Inspect filter assembly for internal or external corrosion damage.

b. Inspect filter assembly for security.

c. Inspect filter assembly for cracks. Maximum depth of nicks, scratches, dents and corrosion: 0.015 inch after cleanup. Thread damage: one-third of thread. Length: one-quarter inch cumulative.

d. Inspect ports of filter assembly for thread damage.

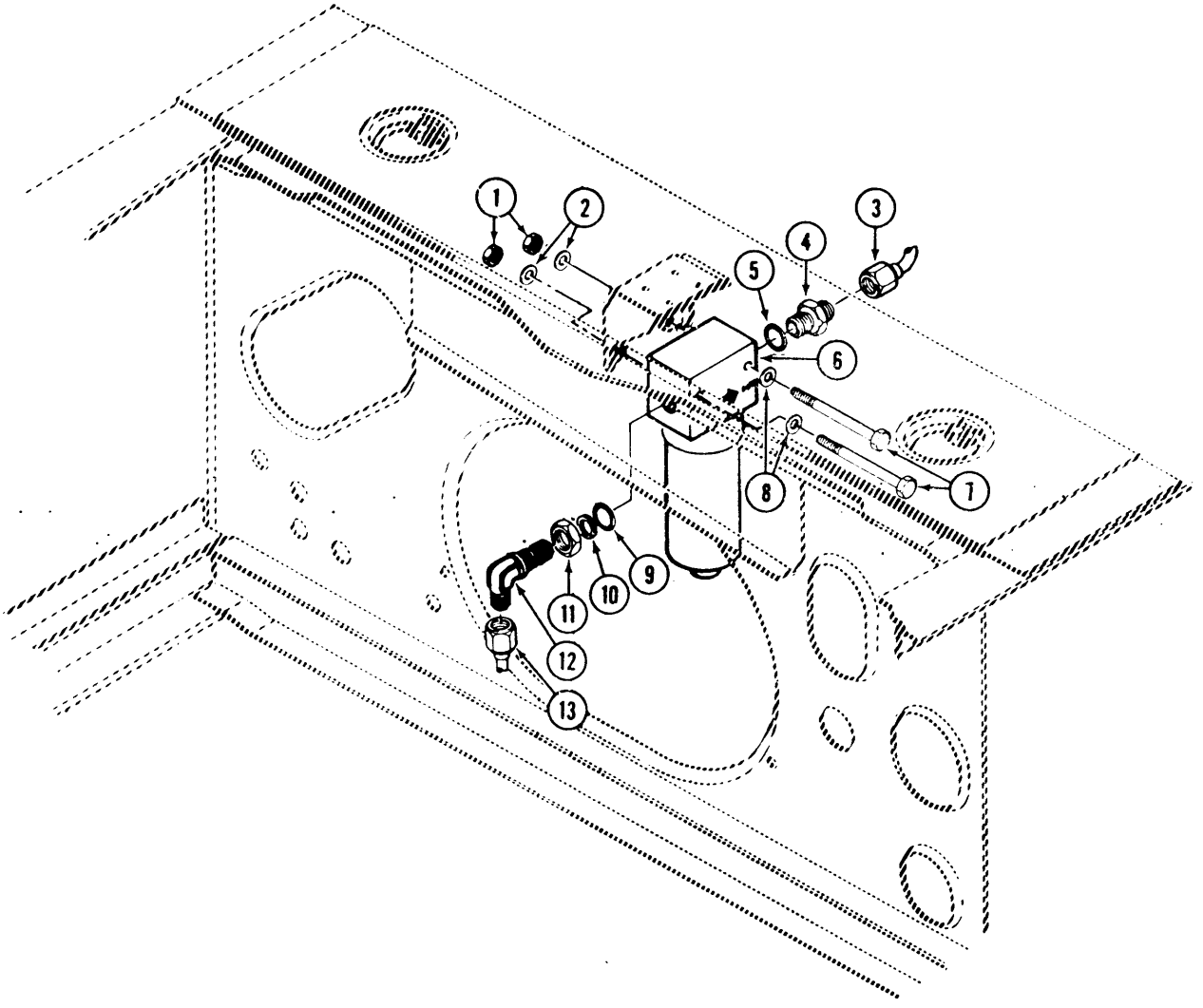

1. Nut
2. Washers
3. Tube assembly
4. Fitting
5. Preformed packing
6. Filter assembly
7. Bolts
8. Washers
9. Preformed packing
10. Ring
11. Nut
12. Fitting
13. Tube assembly

Figure 7-8. Hydraulic Filter Assembly (Helicopter Serial Numbers (63-12956 through 65-12895) – Removal and Installation

e. Disassemble and inspect filter assembly internally for contamination.

f. Inspect attaching components for damage.

WARNING

Cleaning materials are flammable and toxic. Avoid skin contact and breathing of solvent vapors.

7-50. Cleaning — Hydraulic Filter Assembly. Wipe exterior surface of filiter assembly with a soft cloth dampened with solvent (C261).

NOTE

When ambient temperature is below 20 degrees F (-6.7 degrees C) the indicator buttons may extend. Reset button after fluid warms.

7-51. Repair of Replacement — Hydraulic Filter Assembly. a. All UH-1 helicopters use filter elements (29, figure 7-7) rated at 15 micron. These filter elements need to be changed only if the indicator button on the module is tripped or every 3rd and 6th phase inspection, whichever occurs first.

b. If the red indicator button extends remove and replace filter element. Reset the button; operate the hydraulic system until normal operation temperature is obtained.

c. Replace all performed packings and (if required) backup rings.

d. Replace filter assembly when evidence of corrosion exists in internal area of filter.

e. Check for proper security of filter assembly.

f. Any cracks to the filter assembly requires replacement of part. Replace without repair.

g. Contamination: Flush hydraulic system and replace all filter elements.

7-52. Installation — Hydraulic Filter Assembly. a. Install Part No. MS28720-6 or Part No. 205-076-034-5 filter assembly (6, figure 7-8) as follows:

(1) If replacement of filter element (29, figure 7-7, detail A) or replacement of indicator assembly (31) was required, assemble filter assembly (6) as follows:

NOTE

Three different filter assemblies are available for use. Refer to figure 7-7 for differences and determining which filter is installed.

(a) Install backup ring (32, figure 7-7) and packing (33) on indicator assembly (31).

(b) Install packing (34) on indicator assembly (31) and install indicator assembly to head assembly (35).

(c) Install two backup rings (36) and packing (37) into grooves in head assembly (35).

NOTE

Filter elements shall be considered unserviceable if cracked, torn, separated, deteriorated, corroded, crushed, or collapsed.

(d) Install packing (28) in element assembly (29). Place element assembly in bowl (30) and install retainer (27) into groove in bowl (30).

(e) Install bowl (30) on head assembly (35) and secure with lockwire (C155).

(2) Install packing (5, figure 7-8) on fitting (4) and install fitting at IN port of filter assembly (6).

(3) Install nut (11), ring (10) and packing (9) on fitting (12), position fitting (12) (pointing down) and install fitting at OUT port of filter assembly (6).

(4) Position filter assembly (6) to bracket and install bolts (7), washers (8 and 2), and nuts (1).

(5) Remove covers from tube assemblies (3 and 13).

(6) Connect tube assembly (3) to fitting (4).

(7) Connect tube assembly (13) to fitting (12).

(8) Service and bleed hydraulic system (paragraph 7-6).

(9) Install access door (73, figure 2-18).

(10) Lower and secure center troop seats.

b. Install Part No. MS28720-6 or Part No. 205-076-034-5 filter (21, figure 7-7) as follows:

(1) If replacement of filter element (29, figure 7-7) or replacement of indicator assembly (31) was required, assemble filter assembly (21) in accordance with preceding step a.(1).

(2) Install nut (25), ring (24) and packing (23) on fitting (26) and install fitting to IN port of filter assembly (21).

(3) Install nut (15), and packing (18) and (20) on fitting (14).

(4) Thread fitting (14) in OUT port of filter assembly (21) and tighten nut (15) against filter assembly.

(5) Install nut (8), ring (19), and packing (9) on fitting (6). Remove cover from port of solenoid valve and install fitting (6) in solenoid valve. Tighten nut (8) against solenoid valve.

(6) Install bolts (22), washers (4) and spacers (5) to filter assembly (21). Position assembled hydraulic unit to forward side of cargo lift beam and temporarily secure (finger tight) two bolts (22).

(7) Temporarily install (finger tight) bolts (17) and washers (16) to solenoid valve.

(8) Temporarily install (finger tight) bolts (13) and washers (12) to relief valve.

(9) Secure bolts (13, 17 and 22).

(10) Remove covers from connectors of tube assemblies (1, 2, and 10).

(11) Install tube assembly (1) to fitting (26).

(12) Install tube assembly (2) to fitting (6).

(13) Install tube assembly (10) to fitting (11).

(14) Install electrical connector (3) to pressure switch and secure electrical connector with lockwire (C154)

(15) Install electrical connector (7) to solenoid valve and secure electrical connector with lockwire (C155).

(16) Install access door (81, figure 2-18).

7-53. PRESSURE SWITCH.

7-54. Description — Pressure Switch. A pressure switch is provided in the hydraulic system pressure line to sense the system pressure. The pressure switch closes a circuit to the caution panel when pressure is at 500 plus or minus 100 psig decreasing pressure, and the HYD PRESSURE caution light and master caution light will then be illuminated. The pressure switch should open at 800 plus or minus 100 psig increasing pressure.

7-55. Removal — Pressure Switch.

a. Remove access door (81, figure 2-18).

b. Ensure that all electrical power is OFF.

c. Remove lockwire and electrical connector (1, figure 7-9) from pressure switch (2).

d. Position a small container under pressure switch (2) to catch fluid seepage and remove pressure switch from fitting.

e. Remove packing (3) from pressure switch (2).

f. Install protective dust cover to open ports of pressure switch and fitting.

Premaintenance Requirements for Pressure Switch

Conditions	Requirements
Model	All
Part No. or Serial No.	All
Special Tools	None
Test Equipment	Fluorescent Penetrant Method
Support Equipment	None
Minimum Personnel Required	Two
Consumable Materials	None
Special Environmental Conditions	None
References	TM 1-1520-256-23

7-56. Inspection — Pressure Switch.

a. Inspect pressure switch (2, figure 7-9) for evidence of fluid leakage.

b. Inspect pressure switch (2) for corrosion (internally and externally). No internal corrosion allowed. Maximum depth of external corrosion after cleanup: **0.010** inch.

c. Inspect pressure switch (2) for cracks or thread damage. No cracks allowed. Maximum thread damage: Depth — one third of thread, Length — one quarter inch cumulative. If a crack in the Pressure Switch is suspected, refer to TM 1-1520-256-23, Technical Manual Aviation Unit Maintenance (AVUM) and Aviation Intermediate Maintenance (AVIM) manual nondestructive inspection procedures for UH-1 helicopter series.

d. Maximum depth of nicks and scratches, **0.010** inch after cleanup. No dents allowed.

e. Inspect pressure switch (2) for security.

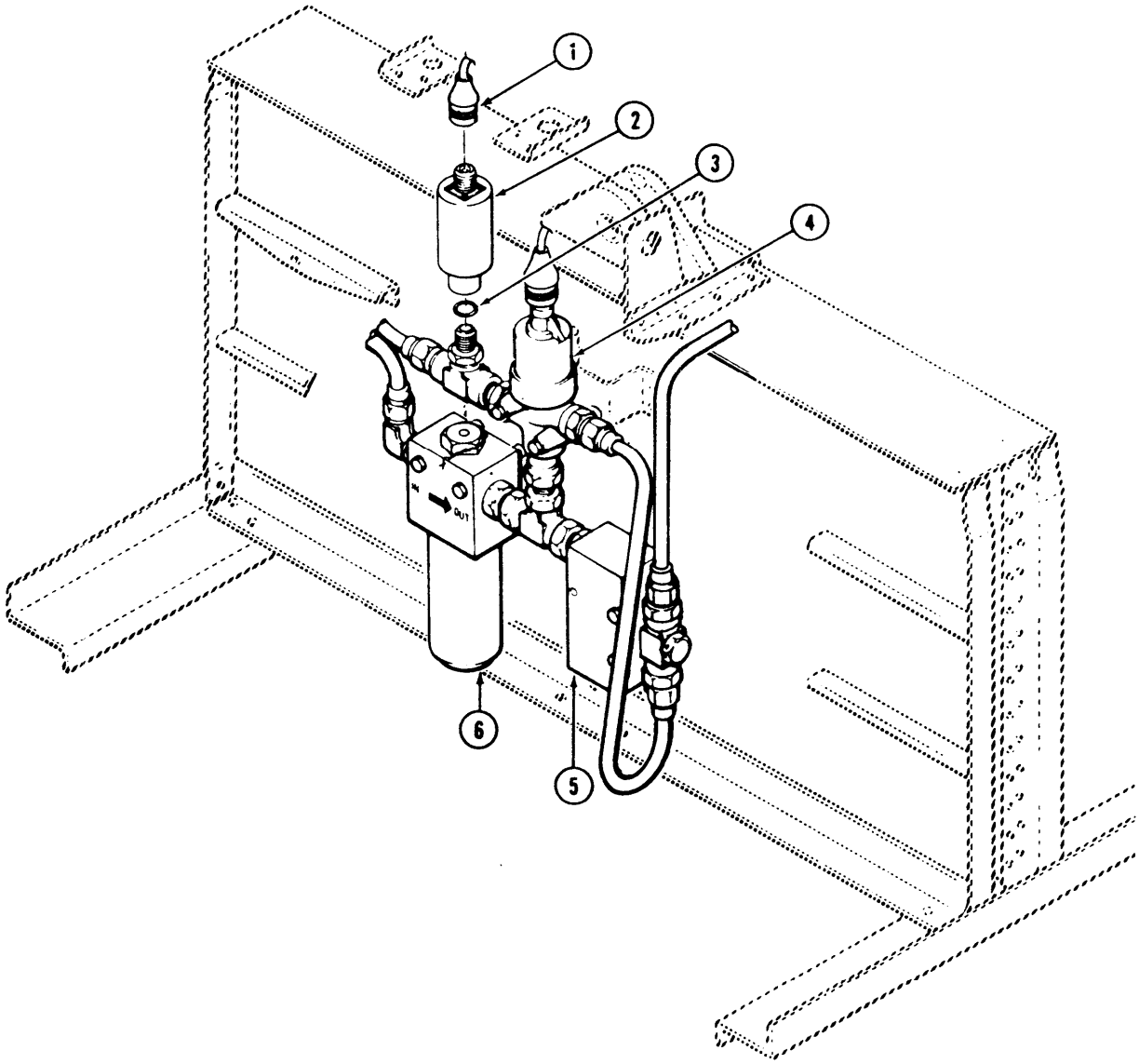

1. Electrical connector
2. Pressure switch
3. Preformed packing
4. Solenoid valve
5. Relief valve
6. Filter assembly

Figure 7-9. Hydraulic Pressure Switch — Removal and Installation

7-57. Repair or Replacement —Pressure Switch. a. Any evidence of leakage to body of pressure switch (2, figure 7-9) requires replacement of part.

b. Replace packing (3).

c. Any corrosion to internal area, or threads of pressure switch (2), requires replacement of part. No repairs allowed.

WARNING

Use spray paint and chemical film material in a well ventilated area. Avoid skin contact and breathing of spray mist.

d. Polish corrosion, nicks or scratches to external area of pressure switch (2) in accordance with limits in paragraph 7-56 with 600 grit sandpaper (C234) to original finish and touched-up with chemical film material (C62) followed with a light application of primer (C312) or primer (C206).

e. Cracks, or malfunction to the pressure switch (2) requires replacement of part. No repairs allowed.

f. Any dents to pressure switch (2) requires replacement of part. No repair allowed.

g. When replacing pressure switch, ensure proper security.

7-58. Test Procedures — Pressure Switch. Perform operational check of pressure switch (2) (paragraphs 7-3 and 7-4).

7-59. Installation — Pressure Switch. a. Remove covers from ports of pressure switch (2, figure 7-9) and fitting.

b. Install packing (3) to fitting.

c. Install pressure switch (2) to fitting.

d. Install electrical connector (1) to pressure switch (2) and secure with lockwire (C154).

e. Apply hydraulic pressure to system. Check pressure switch for proper operation and leakage.

f. Install access door (81, figure 2-18).

7-60. SOLENOID VALVES.

7-61. Description — Solenoid Valves. Two solenoid valves (3 and 18, figure 7-10) are used. One is located on forward side of cargo lift beam and the other (on helicopters with armament provisions) is located on aft side of cargo lift beam.

7-62. Removal — Solenoid Valves. a. Remove access door (81, figure 2-18).

b. Remove left and right soundproofing blankets and left and right pylon doors (23 and 24).

c. Remove hydraulic unit from helicopter (paragraph 7-41, steps b. through j).

d. Disconnect tube assembly (10, figure 7-10) from fitting (7) and install protective cover on tube assembly connector.

e. Break torque on nut (11) and remove solenoid valve (3) from fitting (12).

f. Remove packing (8) and ring (9) from fitting (12).

g. Break torque on nut (14) and remove solenoid valve (3) from fitting (13).

h. Remove packing (5) and ring (4) from fitting (13).

i. Remove fitting (7) and packing (6) from solenoid valve (3).

j. Install protective covers on open ports of solenoid valve (3).

NOTE

Cargo hook may have to be removed prior to performing the following procedures (paragraph 14-151).

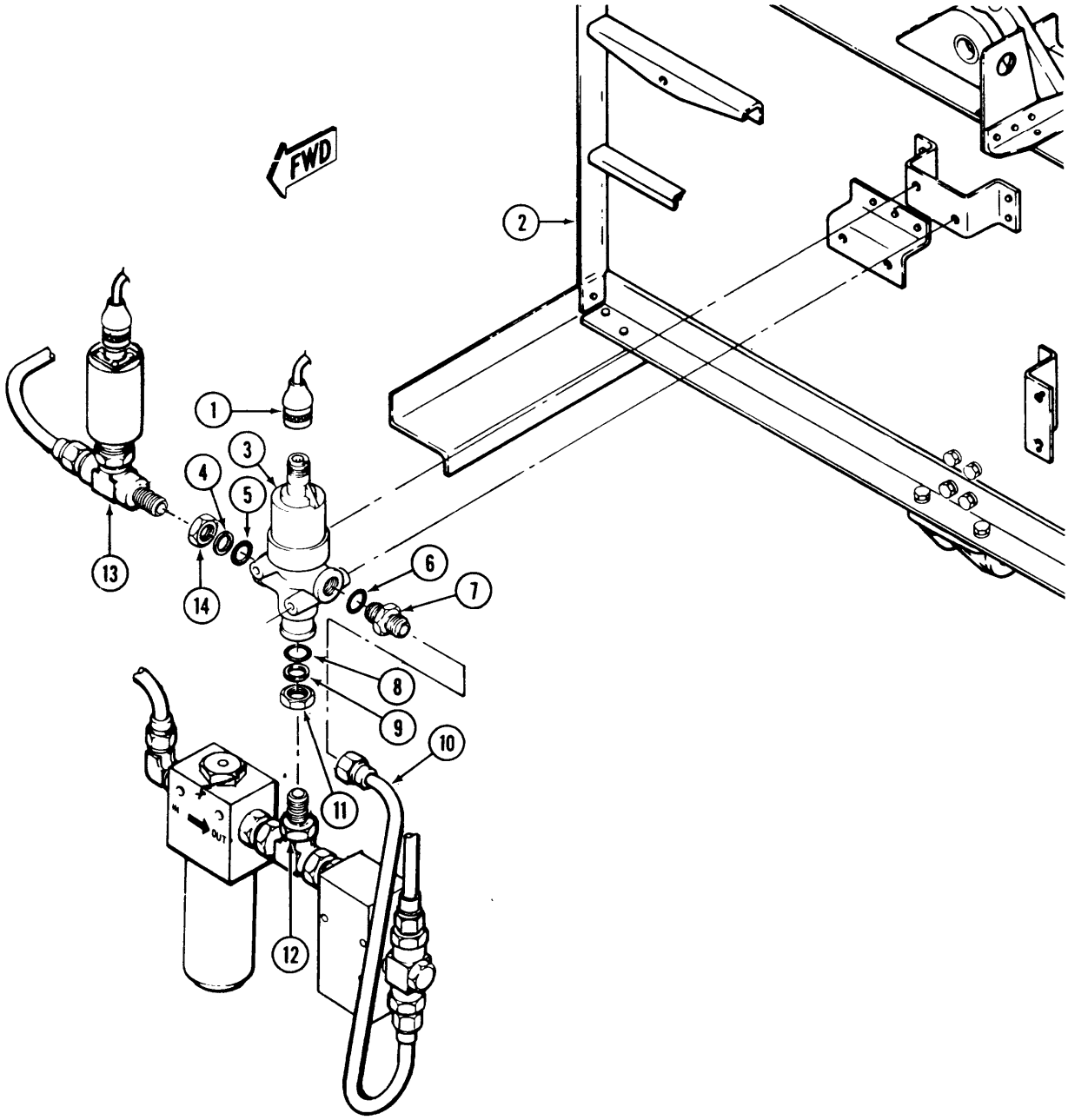

1. Electrical connector
2. Lift beam
3. Solenoid valve
4. Ring
5. Preformed packing
6. Preformed packing
7. Fitting
8. Preformed packing
9. Ring
10. Tube assembly
11. Nut
12. Fitting
13. Fitting
14. Nut

Figure 7-10. Hydraulic Solenoid Valves — Removal and Installation (Sheet 1 of 2)

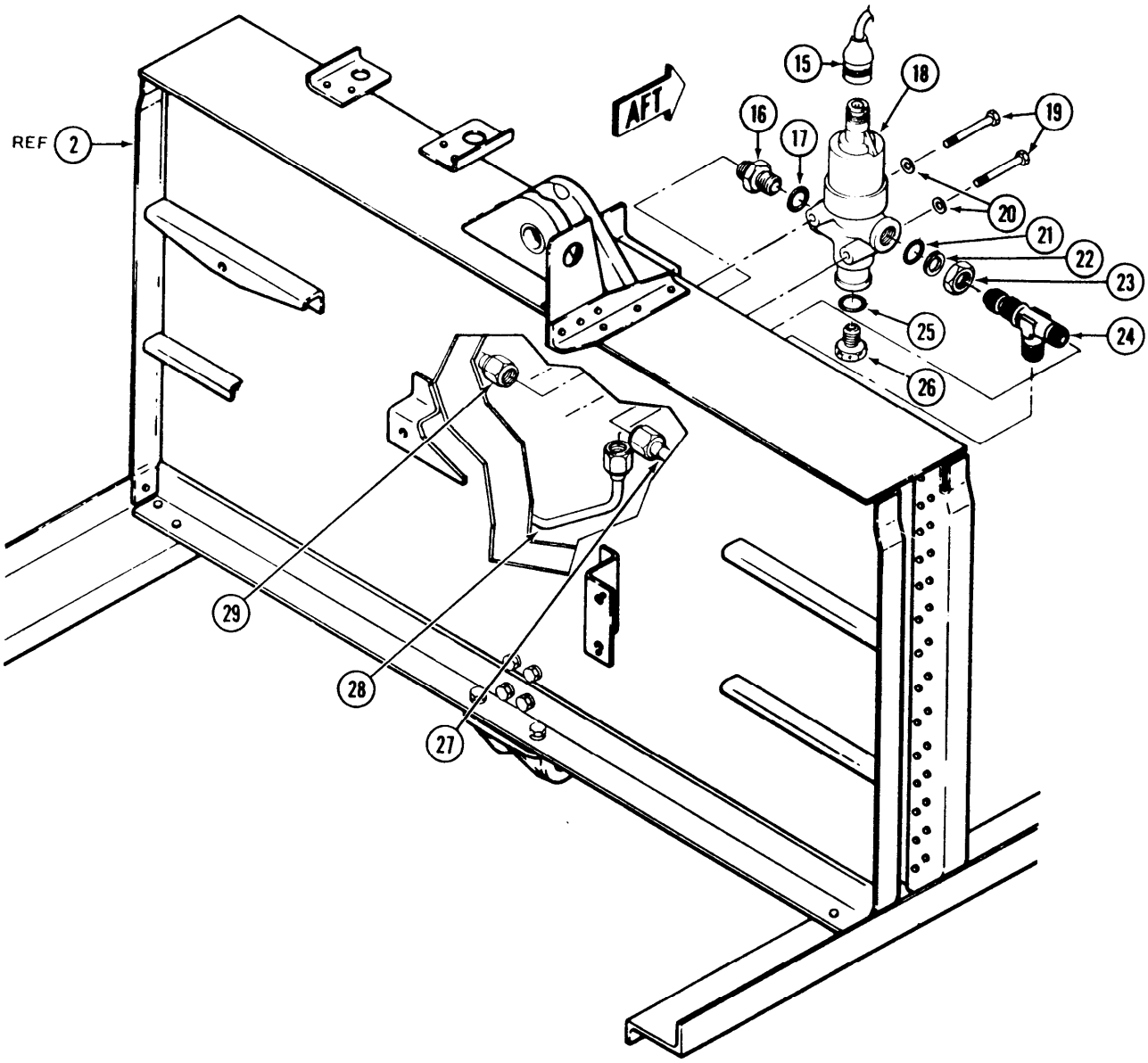

15. Electrical connector
16. Fitting
17. Preformed packing
18. Solenoid valve
19. Bolt
20. Washer
21. Preformed packing
22. Ring
23. Nut
24. Fitting
25. Preformed packing
26. Plug
27. Tube assembly
28. Tubs assembly
29. Tube assembly

Figure 7-10. Hydraulic Solenoid Valves — Removal and Installation (Sheet 2 of 2)

k. If helicopter has armament provisions installed, remove solenoid valve (18) as follows:

(1) Position a small container under solenoid valve (18) to catch fluid seepage and disconnect tube assemblies (27, 28 and 29).

(2) Remove bolts (19) and washers (20) attaching solenoid valve (18) to lift beam and remove solenoid valve.

(3) Install protective covers to connectors of tube assemblies (27, 28 and 29).

(4) Break torque on nut (23) and remove fitting (24) from solenoid valve (18).

(5) Remove packing (21) and ring (22) from fitting (24).

(6) Remove fitting (16) from solenoid valve (18).

(7) Remove packing (17) from fitting (16).

(8) Remove plug (26) from bottom part of solenoid valve (18).

(9) Remove packing (25) from plug (26).

(10) Install protective covers on all open ports of solenoid valve (18).

Premaintenance Requirements for Solenoid Valves

Conditions	Requirements
Model	All
Part No. or Serial No.	All
Special Tools	None
Test Equipment	Fluorescent Penetrant Method
Support Equipment	None
Minimum Personnel Required	Two
Consumable Materials	None
Special Environmental Conditions	None
References	TM 1-1520-256-23

7-63. Inspection—Solenoid Valves.

a. Inspect solenoid valve (3 or 18, figure 7-10) for cracks. No cracks allowed. If a crack in the solenoid valves is suspected, refer to TM 1-1520-256-23, Technical Manual Aviation Unit Maintenance (AVUM) and Aviation Intermediate Maintenance (AVIM) manual nondestructive inspection procedures for UH-1 helicopter series.

b. Inspect internal and external areas of solenoid valve for corrosion damage.

c. Inspect solenoid valve for nicks, scratches, or thread damage.

d. Inspect solenoid valve for security.

7-64. Repair or Replacement—Solenoid Valves.

a. Any cracks to solenoid valves (3 or 18, figure 7-10) requires replacement of part.

WARNING

Use spray paint and chemical film material in a well ventilated area. Avoid skin contact and breathing of spray mist.

b. Corrosion damage to internal area or threads of solenoid valve (3 or 18) requires replacement of part. Minor corrosion, scratches or nicks, to external area of solenoid valve is acceptable, provided damage is completely polished to original finish with 600 grit sandpaper (C234), touched-up with chemical film material (C62), followed with a coat of primer (C312) or primer (C206).

c. Replace solenoid valve (3 or 18) when malfunction exists.

7-65. Test Procedures — Solenoid Valves. Perform operational check of solenoid valve (3 or 18, figure 7-10). (TM 55-1520-210-10).

7-66. Installation—Solenoid Valves.

NOTE

If armament provisions are not installed in hydraulic system, proceed to following step m.

Cargo hook will have to be removed prior to performing the following procedures (paragraph 14-142).

a. Remove protective covers from ports of solenoid valve (18, figure 7-10).

b. Install packing (25) to plug (26).

c. Install plug (26) in bottom port (number 3) of solenoid valve (18).

d. Install packing (17) to fitting (16).

e. Install fitting (16) port (number 2) of solenoid valve (18).

f. Install nut (23), ring (22) and packing (21) to fitting (24).

g. Install and position fitting (24) (with tee down) and secure nut (23).

h. Remove protective covers from tube assemblies (27, 28 and 29).

i. Position solenoid valve (18) (with fitting (24) pointing toward left side) to aft side of cargo lift beam and install bolts (19) and washers (20).

j. Connect tube assemblies (27, 28 and 29) to solenoid valve. (Refer to table 1-5 for proper torque on fluid connectors.)

k. Install electrical connector (15) to top of solenoid valve (18) and secure electrical connector with lockwire (C155).

l. If solenoid valve (3) was not removed, bleed and perform operational test of hydraulic system (paragraphs 7-6 and 7-4).

m. Install solenoid valve (3) as follows:

(1) Install packing (6) on fitting (7) and install fitting (with pressure switch) to port (number 1) of solenoid valve (3).

(2) Install nut (14), ring (4) and packing (5) to fitting (13). Position fitting (with pressure switch up) and install fitting to port (number 2) of solenoid valve (3) and secure nut (14).

(3) Install nut (11) ring (9) and packing (8) to fitting (12).

(4) Install solenoid valve to fitting (12) and secure nut (11) against bottom of solenoid valve (3).

(5) Connect tube assembly (10) to fitting (7).

(6) Install hydraulic unit to forward side of lift beam (paragraph 7-45, steps d. through i).

7-67. HYDRAULIC SERVO CYLINDER ASSEMBLY (CYCLIC CONTROL).

NOTE

An improved servo cylinder (PN 205-076-056-107) has been developed to replace the current servo cylinder and irreversible valve.

The servos are functionally interchangeable and may be used in mixed installations with the current servos.

7-68. Description—Hydraulic Servo Cylinder Assembly (Cyclic Control). Two hydraulic cylinder assemblies (6 and 33, figure 7-11) are incorporated to reduce effort required for fore and aft and lateral control and to reduce feedback or forces from main rotor. The pilot-operated linkage terminates at the servo valve (figures 7-12 and 7-13) when hydraulic power is ON. There are two types of hydraulic cylinder assemblies that may be installed on the aircraft. One is the type which incorporates a servo cylinder and irreversible valve combination and the other is a servo cylinder in itself that functions identically to the servo/irreversible valve unit. These two assemblies may be used either in pairs or mixed. Due to the complexity of the newer servo cylinder, PN 205-076-056-107, few repairs are authorized below depot level. For this reason procedures for inspecting both types of servo cylinders differ and are identified where required. Installation instructions differ between the two assemblies due to the geometry of the newer single valve assembly. Separate instructions are given for installation.

7-68.1 Removal and Replacement—Hydraulic Servo Cylinder Assembly. Hydraulic servo cylinder assemblies (cyclic and collective) may be replaced without a rigging check, using the following procedures, providing there are no other discrepancies in the flight control system which require a rigging check.

a. Remove the hydraulic servo cylinder assembly from the helicopter. (Refer to paragraph 7-72 or 7-84.)

b. Measure and record dimension “A”, (refer to figure 7-12) of removed cylinder assembly.

c. Remove tube assembly (5, figure 7-14), from servo cylinder assembly, reference paragraph 7-72a (5) thru (8).

d. Install tube (5) on new servo cylinder assembly, refer to paragraph 7-76d.

e. Adjust hydraulic servo cylinder assembly to previously recorded dimension “A” (see step b above).

f. Insure that clevis (1) is properly aligned. Do not loosen nut (3).

g. Torque nut (6) (refer to figure 7-12).

h. Install boot (33) (refer to paragraph 7-76f and 7-89a).

i. Install hydraulic servo cylinder assembly (refer to paragraph 7-78 or 7-91).

j. If during test flight a discrepancy is experienced, perform a rigging check.

7-69. Adjustment—Hydraulic Servo Cylinder Assembly (Cyclic Control).

a. Check clevis adjustment of 2.53 inches as shown in figure 7-12.

b. Check overall dimension A adjustment of hydraulic cylinder assembly as shown in figure 7-12.

c. After final adjustment of length has been accomplished, seal thread area, witness hole and area where tube body meets upper end fitting with sealant (C244) or equivalent. See NOTE B, figure 7-12. Insure that no weep holes exist after applying sealant. Check slot for position sealing.

Premaintenance Requirements for Hydraulic Servo Cylinder (cyclic control) Assembly

Conditions	Requirements
Model	All
Part No. or Serial No.	All
Special Tools	None
Test Equipment	Fluorescent Penetrant Method
Support Equipment	None
Minimum Personnel Required	Two
Consumable Materials	None
References	TM 1-1520-256-23

7-70. Inspection — Hydraulic Servo Cylinder (Cyclic Control) Assembly (Installed). Perform the following inspection functions with hydraulic cylinder assembly installed.

a. Inspect all parts of hydraulic cylinder assemblies (6 and 33, figure 7-11) for damage, corrosion or pitting, and distorted threads (paragraph 7-73 and table 7-5).

b. Inspect housing (11, figure 7-14) for looseness, wear and proper installation. There must be no indication of binding.

c. Inspect hydraulic cylinder assemblies (6 and 33, figure 7-11) for security.

d. Inspect hydraulic cylinder assemblies (6 and 33) for evidence of leakage. Any evidence of leakage to cylinders requires replacement of seals.

e. Inspect protective boots (9 and 33, figure 7-14) for cuts, holes, tears and deterioration. Replace boot if any of the above are evident. If boot (9 or 33) is dirty or oil soaked, remove boot (paragraph 7-72) and wash inside and outside of boot with a mild detergent and warm water. Check bearing for friction.

f. Disconnect hydraulic cylinders (6 or 33, figure 7-11) from the control tubes (13 or 27) and swashplate (paragraph 7-71).

NOTE

Presence of KSP9046 shield and plastic plug in the grease zerk port is the only indication, other than physical teardown, of the presence of KSP6099 bearing.

This bearing does not require the spring scale torque check. The required friction has been built into this bearing during manufacture and it requires no additional adjustment. The bearing is designed to gimbal freely, thus does not have the characteristic tightness of the uniball bearing which requires the spring scale torque test. The rotational freedom of the KSP 6099-1 bearing should not be interpreted as wear and the axial vertical movement should not be considered as excessive unless feedback is felt in the controls. The bearing requires no lubrication and plugs should be installed in the grease fitting (12) holes. Installation of the KSP 6099-1 bearing requires that the bearing housing retaining nut be torqued 1100 to 1180 inch-pounds to secure it to the servo cylinder. This torque does not affect the friction on the housing. When the KSP 6099-1 bearing is installed, the KSP 9046-1 shield must also be installed. Do not use (rubber) boot (9) when installing shield on P/N 205-076-099 cylinder assembly.

g. Remove hoses (19 and 20) from fittings (18) and place suitable container under irreversible valve (22). Bottom (retract) hydraulic cylinder (6 and 33) and attach a pound reading scale to clevis (on top of hydraulic cylinders). Check for smooth operation during extension (paragraph 7-73); a friction drag of 25 pounds or less is acceptable. If the friction drag is greater than 25 pounds, the hydraulic cylinder should be allowed to warm up to 65˚F - 90˚F and be rechecked. If friction drag is greater than 25 pounds after warm up, replace hydraulic servo cylinder assembly.

h. Extend hydraulic cylinder in the full up position. Attach a pound reading spring scale to clevis (on top of hydraulic cylinders). Check the force required to move the cylinder through full fore/aft and lateral travel as shown in view B, figure 7-14. If force is not within 1 TO 2.5 pounds, retorque nut (10, figure 7-14) as follows:

NOTE

Spring scale drag check per view B will not be required for 205-076-099 hydraulic cylinder assembly. Refer to NOTE preceding step g above.

(1) Lubricate fitting (12). Using spanner wrench (T2), torque nut (10) 400 TO 450 inch-pounds. Rotate cylinder assembly through full travel (see View B) several times to ensure proper seating of bearing surfaces to bushing set (see View A).

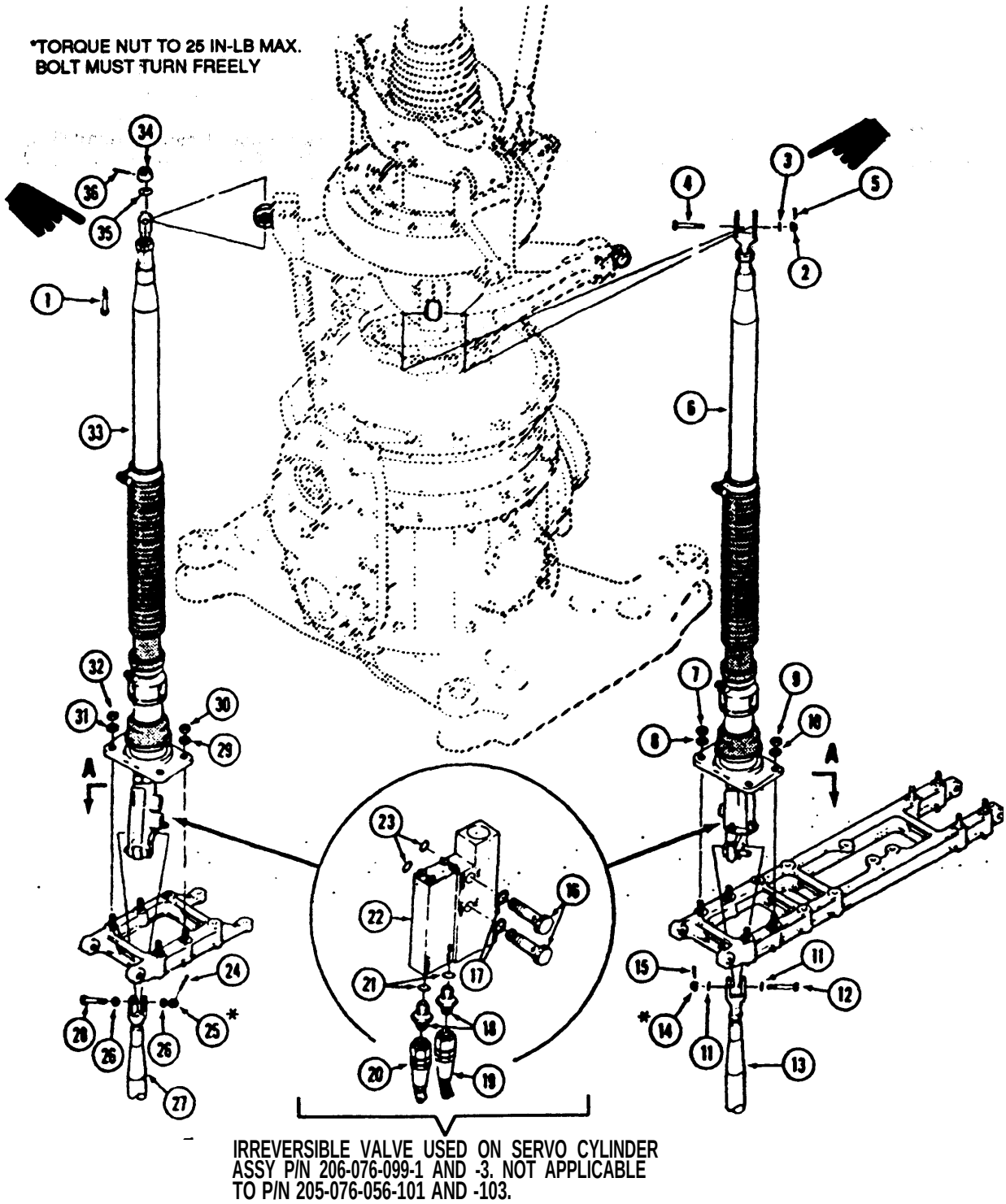

Figure 7-11. Hydraulic Cylinder Assemblies Fore and Aft and Lateral Cyclic Controls-Removal and Installation (Sheet 1 of 4)

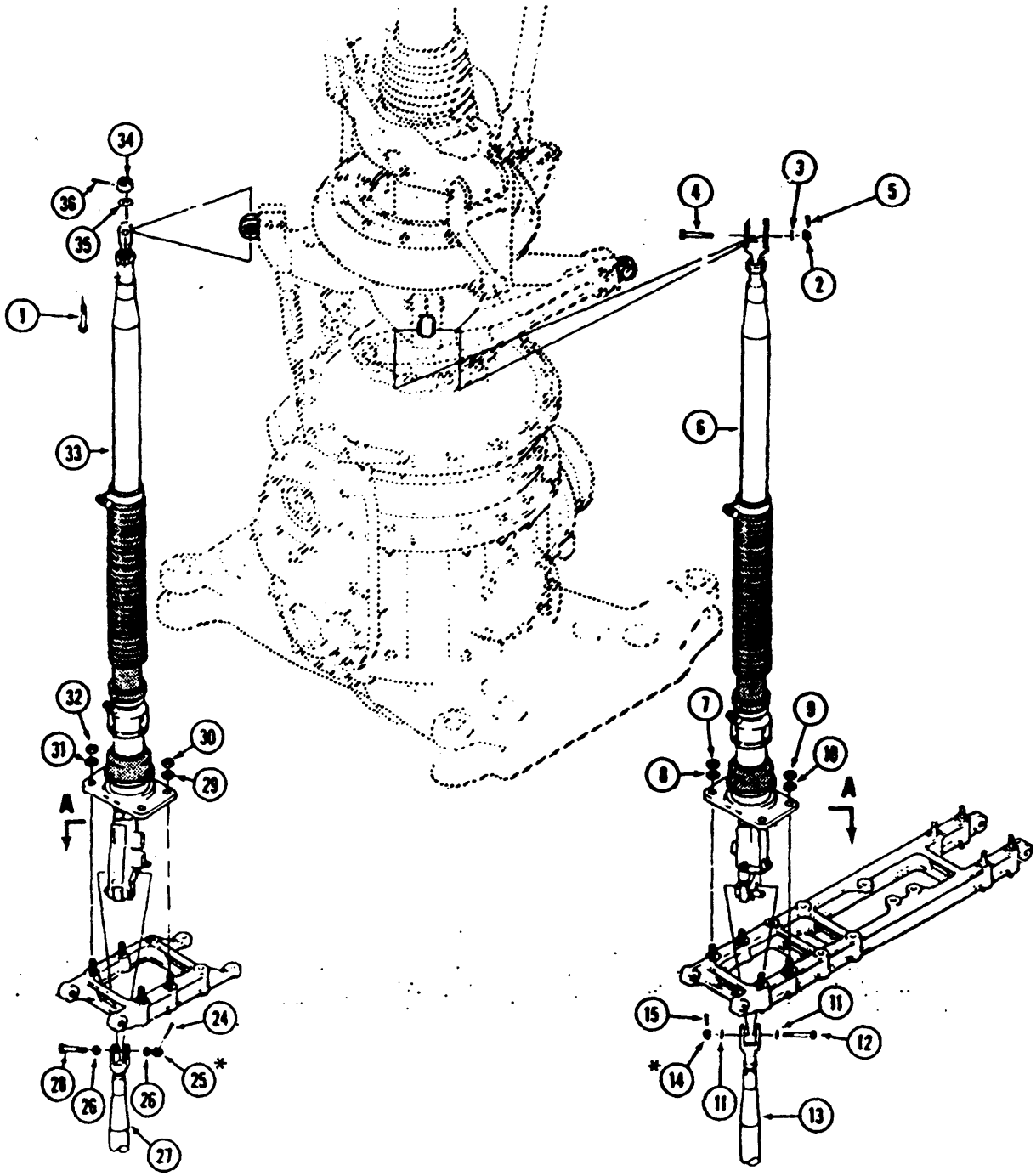

P/N 205-076-056-103

P/N 205-076-056-101

Figure 7-11. Hydraulic Cylinder Assembles Fore and Aft and Lateral Cyclic Controls-Removal and Installation (Sheet 2 of 4)

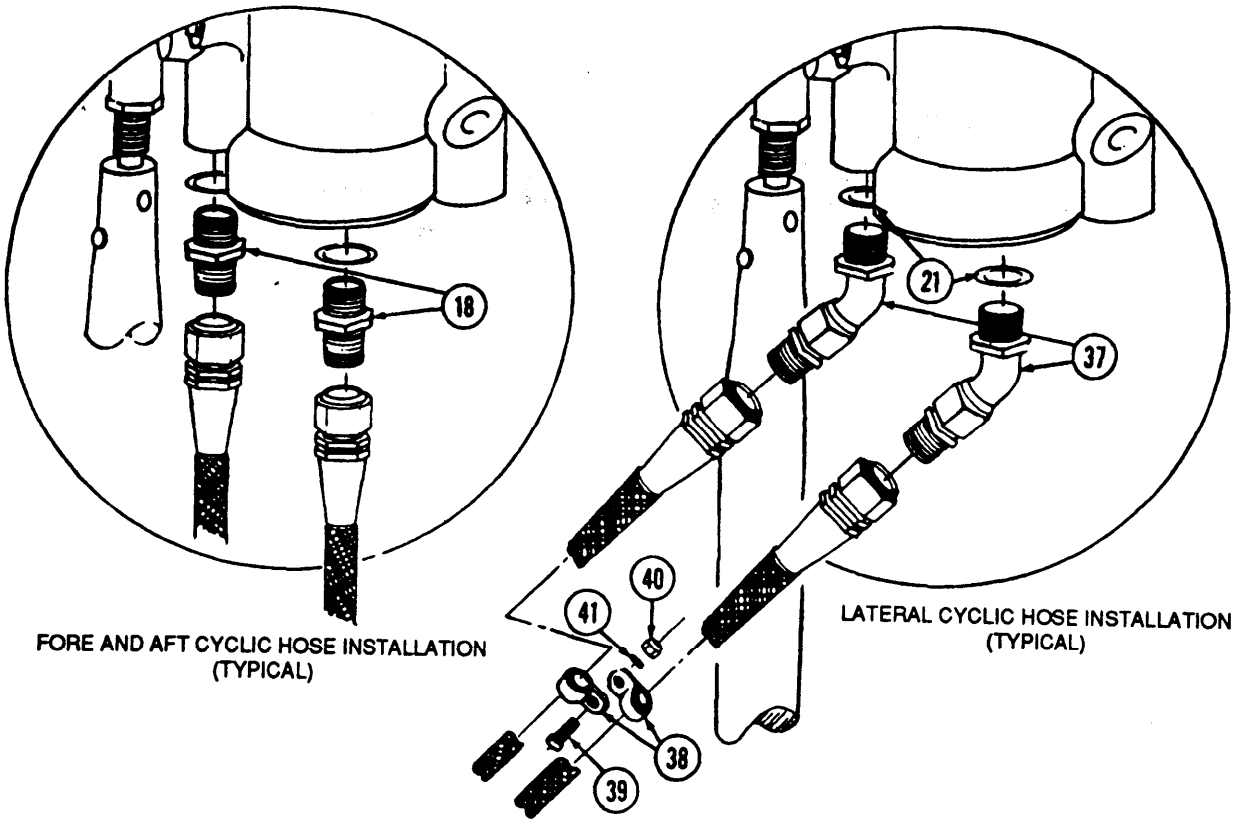

Figure 7-11. Hydraulic Cylinder Assembles Fore and Aft and Lateral Cyclic Controls-Removal and installation (Sheet 3 of 4)

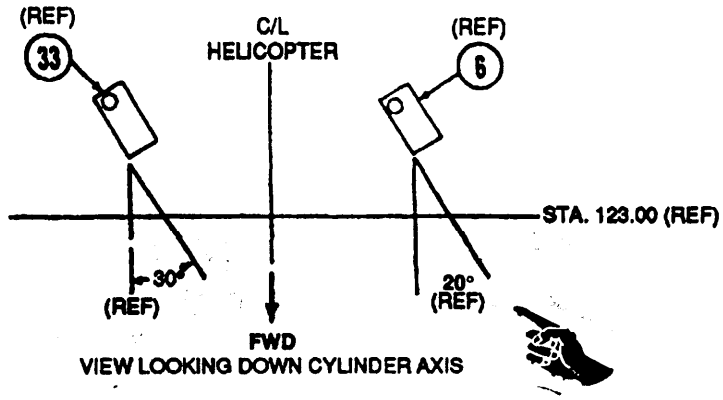

SERVO CYLINDER ASSEMBLY P/N 205-076-056-101 AND -103

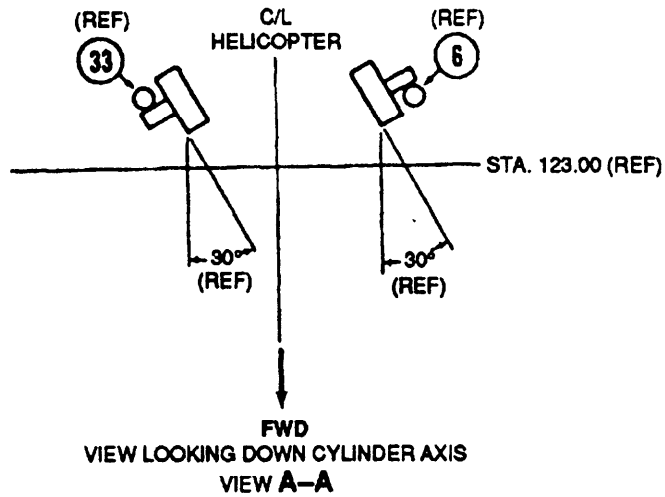

SERVO CYLINDER ASSEMBLY P/N 205-076-099-1 AND -3

1. Bolt.
2. Nut
3. Washer
4. Bolt
5. Cotter pin
6. Hydraulic cylinder
7. Nut
8. Washer
9. Nut
10. Washer
11. Washer
12. Bolt
13. Control tube
14. Nut
15. Cotter pin
16. Bolt
17. Preformed packing
18. Fittings
19. Hose assembly
20. Hose assembly
21. Preformed packing
22. Irreversible valve
23. Preformed packing
24. Cotter pin
25. Nut
26. Washer
27. Control tube
28. Bolt
29. Washer
30. Nut
31. Washer
32. Nut
33. Hydraulic cylinder
34. Nut
35. Washer
36. Cotter pin
37. Fittings
38. Hose Clamp
39. Machine Screw
40. Nut
41. Washer

Figure 7-11. Hydraulic Cylinder Assemblies Fore and Aft and Lateral Cyclic Controls-Removal and Installation (Sheet 4 of 4)

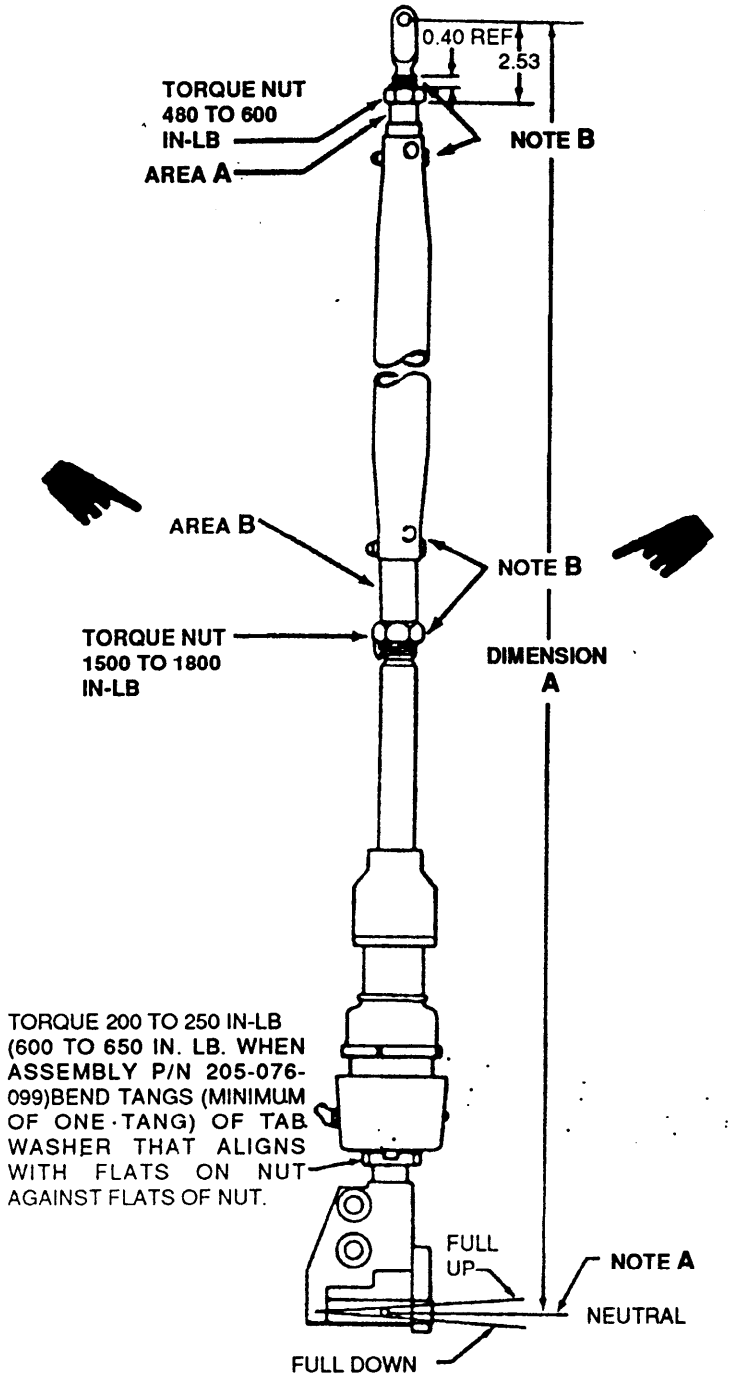

ASSEMBLY	DIMENSION A (INCHES)
Right Cylinder (Cyclic)	53.72
Left Cylinder (Cyclic)	53.47
Left/Aft Cylinder (Collective)	
204-076-070	48.10
204-076-038	48.10
204-076-099	48.10
204-076-056	48.10

NOTE A

Dimension A is obtained with valve in neutral position.

NOTE B

After final adjustment, use sealing compound (C244) or equivalent. to completely. seal the tube assembly threaded areas, slots,and witness holes make sure no voids exist after drying.

Figure 7-12. Hydraulic Servo Cylinder Adjustment Dimensions

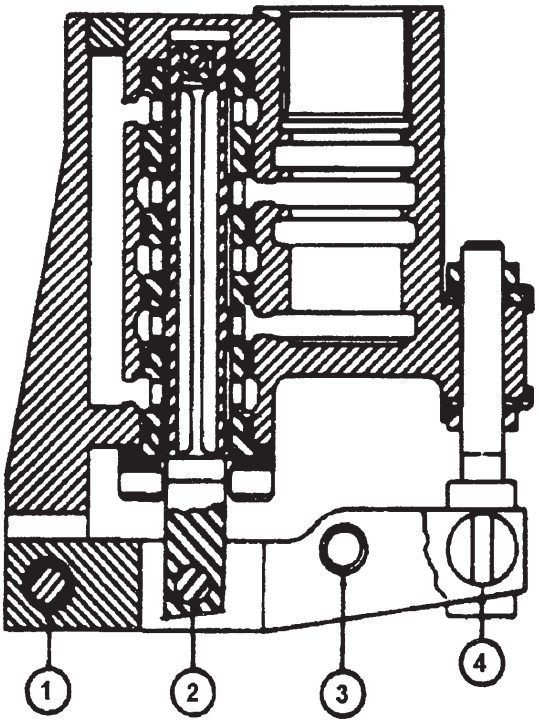

1.	Screw	3.	Bolt
2.	Screw	4.	Bolt

Figure 7-13. Hydraulic Cylinder Servo Valve (Wire Drive Type)

(2) Loosen nut (10) and retorque to obtain **1 TO 2.5** pounds drag (see view B), by spring scale, on bearing. On part number 205-076-099 cylinder assembly, torque nut (10) **1100 TO 1180** inch-pounds.

NOTE

Locknut assembly used on cylinder assembly, P/N 205-076-099, requires one positive safety only.

(3) After proper drag on bearing has been accomplished, secure nut (10) to housing (11) with lockwire (C155) in two places, one positive safety to prevent loosening and one negative safety to prevent further tightening. (See detail D, figure 7-14).

(4) Apply slippage marks (C141) from nut (10) to housing (11).

(5) Connect control tube at bottom of the cylinder assembly and connect the cylinder assembly to the collective lever or swashplate assembly. When vertical movement is detected at the uni-ball, retorque nut (10), perform spring drag check and re-lube.

NOTE

It is permissible for the cylinder barrel to turn within the housing assembly, provided there is no vertical movement of the barrel. When vertical movement is detected at the uniball, and the uniball is other than the KSP6099, the servo must be removed from aircraft and returned to AVIM for retorque and re-lube. If after retorquing per paragraph 7-70h(5) vertical movement is detected, replace Hydraulic Servo Cylinder Assembly.

(6) Install hoses (19 and 20, figure 7-11) to fittings (22). Remove container.

i. Inspect linkage part for wear, elongated bolt holes, cracks, nicks, and surface damage.

j. Inspect hydraulic cylinder servo valve for serviceability.

(1) Inspect servo valve assembly (paragraph 7-73). Inspect servo valve for leakage.

(2) Inspect servo valve for nicks, scratches or thread damage (paragraph 7-73).

(3) Inspect servo valve for cracks. No cracks allowed.

(4) Inspect for deformity.

(5) Visually inspect internal area of ports and external surfaces of servo valve for corrosion damage.

(6) Inspect servo valve and attaching components for security.

(7) Inspect chamfered end of piston rod for sharp edges.

(8) Check linkage set for sticking or binding.

(9) Inspect housing for cracks. No cracks allowed. If a crack in the housing is suspected, refer to TM 1-1520-256-23, Technical Manual Aviation Unit Maintenance (AVUM) and Aviation Intermediate Maintenance (AVIM) manual nondestructive inspection procedures for UH-1 helicopter series.

(10) Inspect bolts through arm lever for wear and distortion, bolt to be fingertight only.

k. Check cotter pins for security.

l. Inspect bearing housing and flange for elongation of holes.

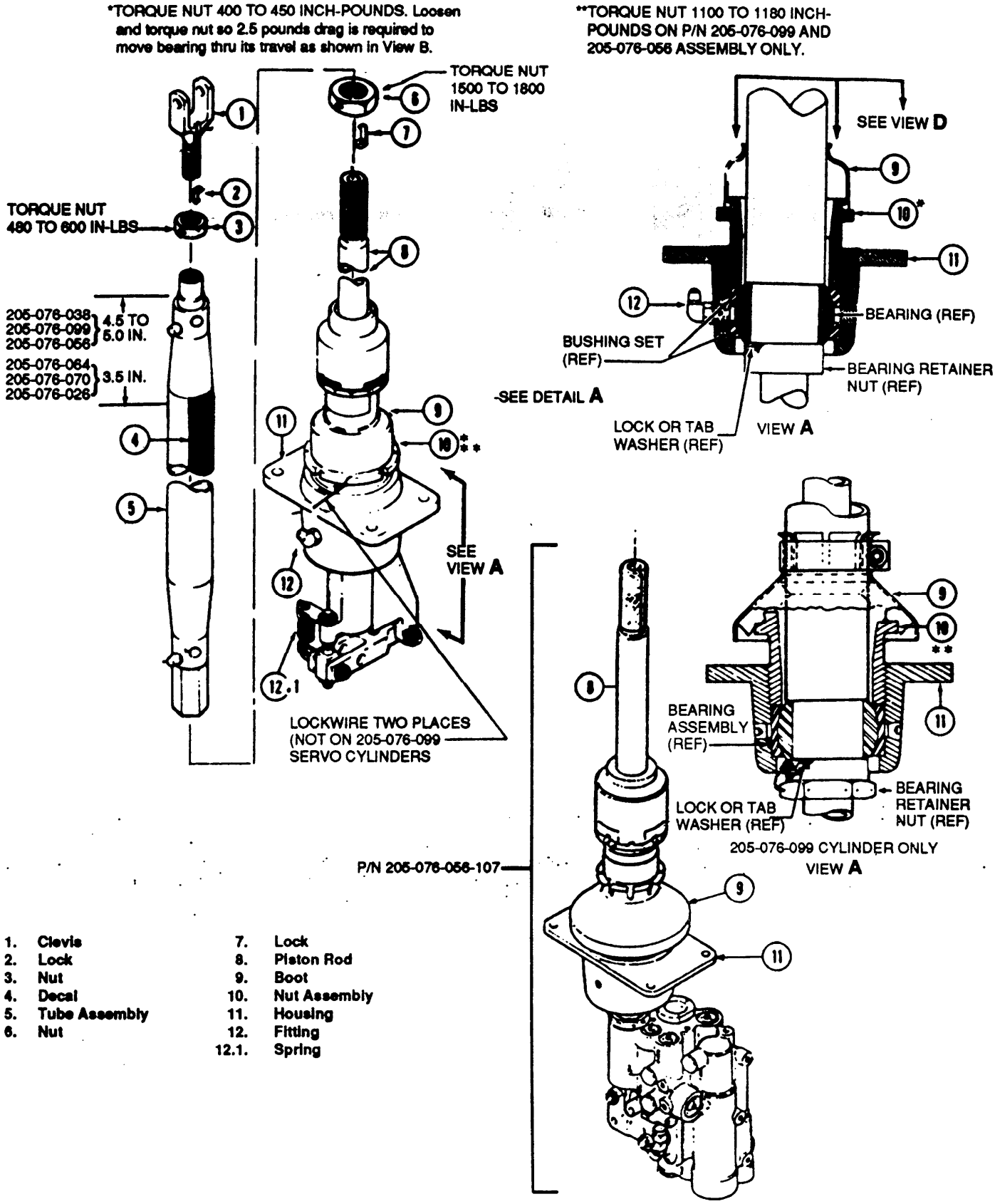

1. Clevis
2. Lock
3. Nut
4. Decal
5. Tube Assembly
6. Nut
7. Lock
8. Piston Rod
9. Boot
10. Nut Assembly
11. Housing
12. Fitting
12.1. Spring

Figure 7-14. Hydraulic Cylinder Assembly - Disassembly and Assembly (Sheet 1 of 3)

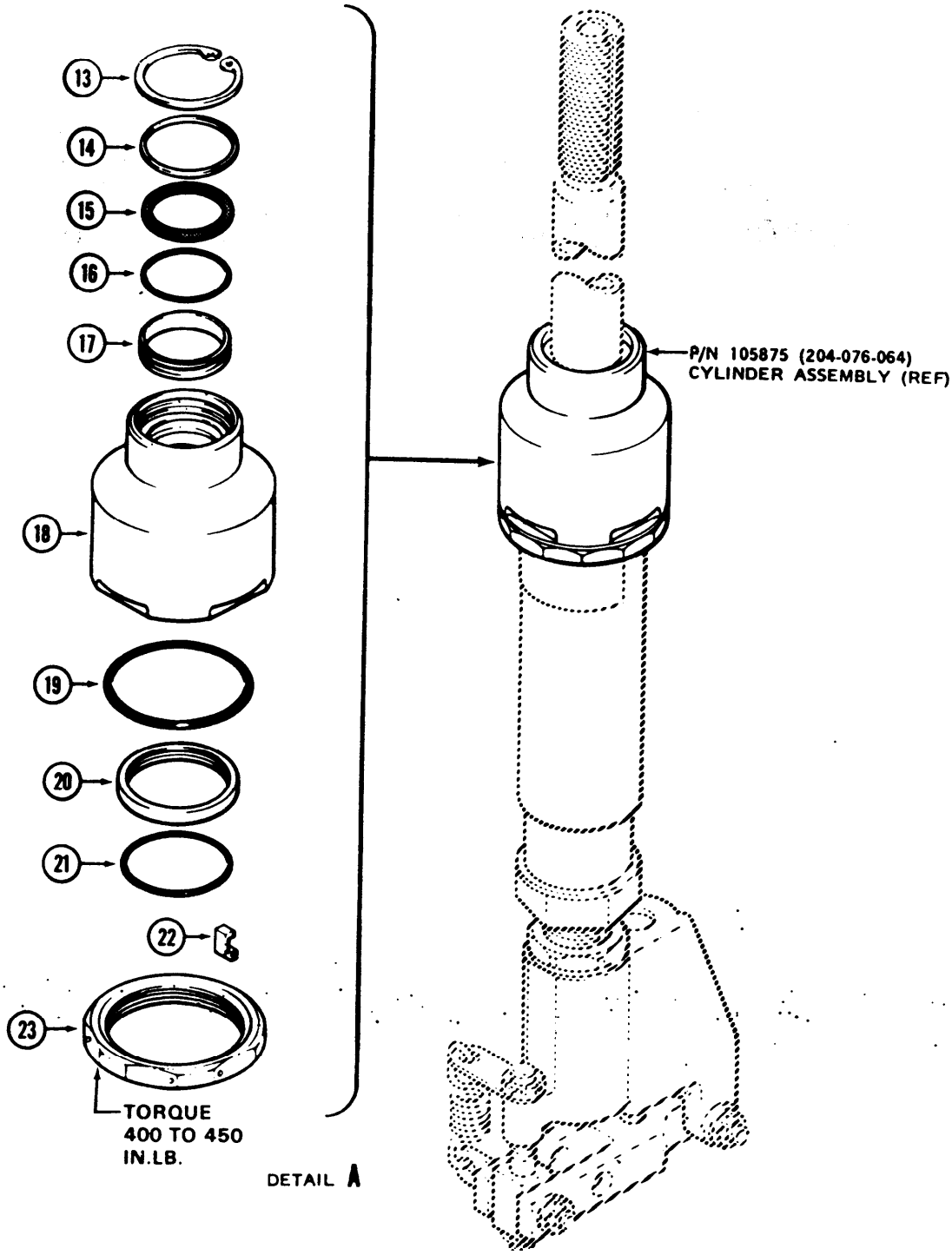

13. Retaining ring
14. Retainer
15. Wiper ring
16. Preformed packing
17. Packing strip
18. Cylinder cap
19. Preformed packing
20. Cap seal
21. Preformed packing
22. Key
23. Nut

Figure 7-14. Hydraulic Cylinder Assembly — Disassembly and Assembly (Sheet 2 of 3)

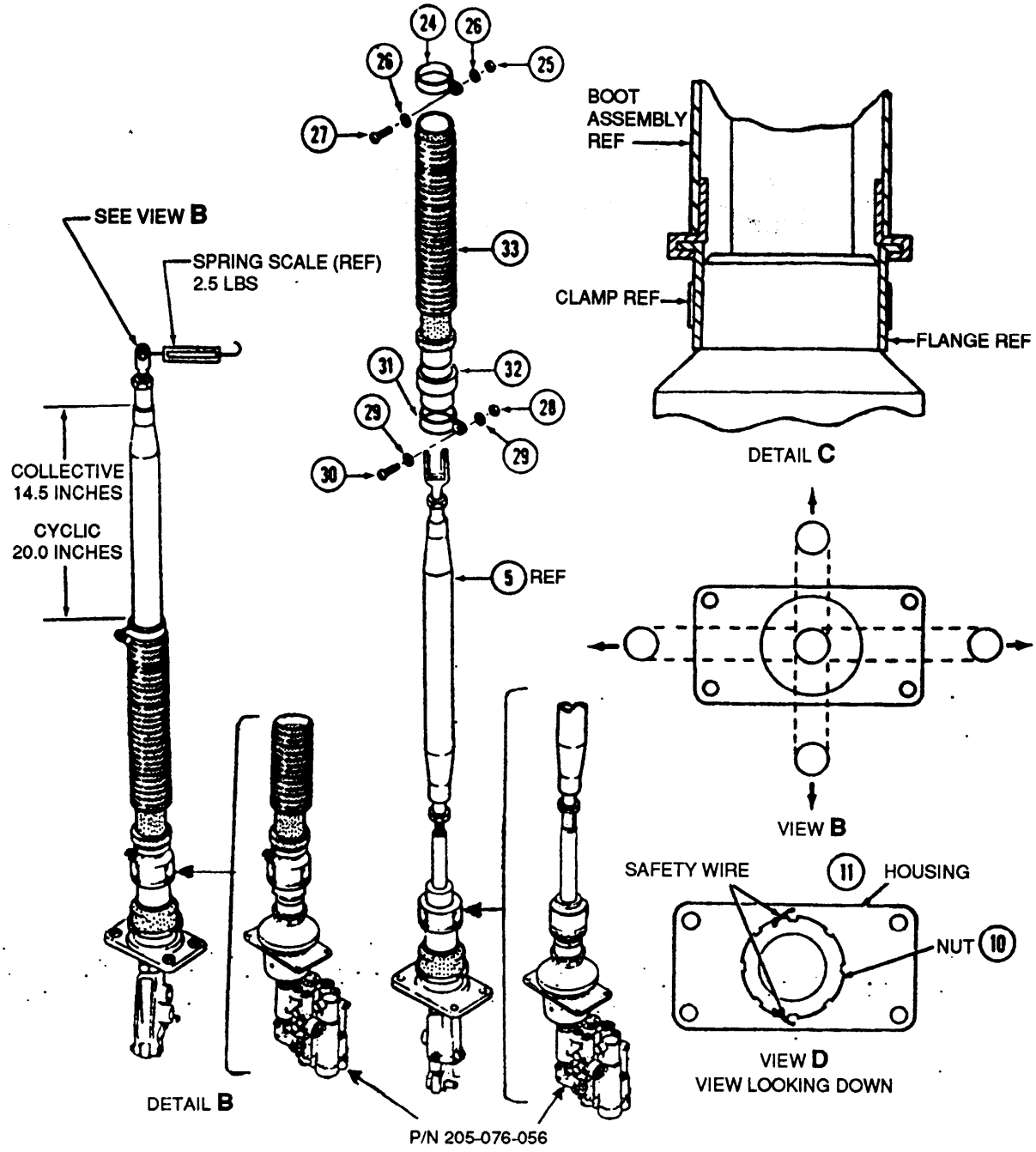

24. Clamp (upper)
25. Nut
26. Washers
27. Screw
28. Nut
29. Washers
30. Screw
31. Clamp (lower)
32. Swivel joint flange
33. Boot

Figure 7-14. Hydraulic Cylinder Assembly - Disassembly and Assembly (Sheet 3 of 3)

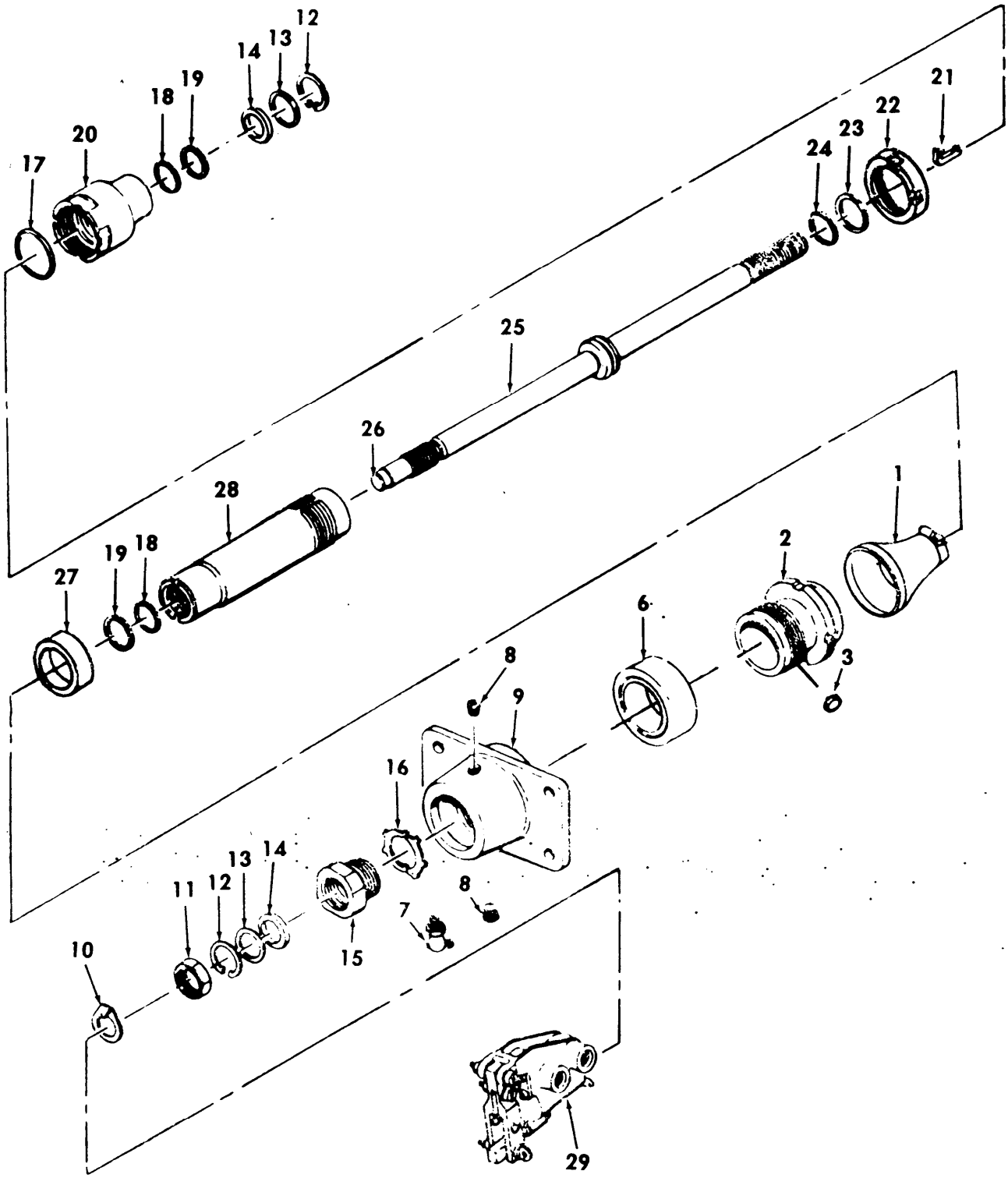

Figure 7-14.1 Hydraulic Cylinder Assembly P/N 205-076-099
Disassembly and Assembly (Sheet 1 of 2)

1. Shield Assembly
2. Nut
3. Nylon Stop
4. Bushing Set (not shown)
5. Bearing (not shown)
6. Bearing KSP 6099-1
7. Fitting
8. Plug
9. Housing
10. Washer
11. Nut
12. Ring
13. Retainer
14. Scraper
15. Retainer
16. Washer
17. Packing
18. Packing
19. Seal
20. Cap
21. Key
22. Nut
23. Seal
24. Seal
25. Rod Assy
26. Plug
27. Plate
28. Cylinder
29. Head Assy

7-14.1 Hydraulic Cylinder Assembly P/N 205-076-099
Disassembly and Assembly (Sheet 2 of 2)

m. Inspect hydraulic cylinder assembly for leaks at all connections and fittings. With power on, seepage around piston rod seals is permissible but not to exceed one drop for every 25 cycles. A cycle is defined as valve position neutral, to full up, to full down, to neutral (figure 7-12 and 7-13).

n. Inspect upper cylinder tube (5, figure 7-14), at time of replacement of cyclic control hydraulic cylinder (paragraph 7-76).

o. Inspect moisture seal (sealant) on clevis on top of control tube (5) for looseness or cracking (Note B, figure 7-12). If the adhesive bond is broken, remove tub assembly and inspect tube for corrosion and thread damage.

p. Inspect for play between Hydraulic Servo Lever Assembly (Sloppy Link) and Drive Rod (Wire Drive) per steps below.

NOTE

This procedure is not applicable to servo cylinder PN 205-076-056-107.

(1) Disconnect control tubes (.13 and 27, figure 7-11 and 11, figure 7-23) from the lever assembly of all three (fore/aft, lateral and collective) servo cylinders. Remove spring (12. 1, figure 7-14) on collective servo.

NOTE

Check for play must be done on hydraulic levers of all three servo cylinders.

(2) Clamp a dial indicator to the flat surface of the irreversible valve. Place stylus of the reaction arm . at the bottom of lever at position two (2, figure 7-13), directly under the attaching point of the drive rod. Hold a pencil eraser against the drive rod to help in detecting movement. Move lever up and down and measure for play at the drive rod to servo lever attach point. Reinstall spring (12.1, figure 7-14) on collective servo.

NOTE

Drive rod must not move up and down while lever is being moved during measurement for play.

(3) Limitations and Corrective Action.

(a) Measured play must not exceed 0.015 inch.

(b) if measured play exceeds 0.015 inch, either or both the shoulder screw and bearing at position two (2, figure 7-13) in the servo lever need to be replaced to bring play below the 0.015 inch limit.

(c) If measured play is within limits, reconnect spring (12.1, figure 7-14) on servo cylinder.

q. Check bearing retainer nut (view A, figure 7-14) for looseness. If looseness is felt, torque bearing retainer nut in accordance with figure 7-12.

7-71. Removal-Hydraulic Servo Cylinder Assembly (Cyclic Control).

NOTE

Ensure protective cover are installed on all open ports to prevent entry of foreign material.

Premaintenance requirements for removal of hydraulic cylinder assembly (cyclic control)

Condition	Requirements
Model	All
Part No. or Serial No.	204-076-026, 205-076-038, 205-076-099
Special Tools	None
Test Equipment	None
Support Equipment	Maintenance Work Stands
Minimum Personnel Required	Two
Consumable Materials	None
Special Environmental Conditions	Dust Free/Well Ventilated Area.

a. Hydraulic Servo Cylinder (6, figure 7-11.)Remove hydraulic cylinder assembly in accordance with the following procedures:

(1) Open transmission cowling (2, figure 2-18) and left side engine cowls (6 and 7).

(2) Remove soundproofing blankets and left side access doors (3 and 24) from pylon island in cabin area.

(3) Remove soundproofing blanket and access door (81) from pylon island in cabin area.

(4) Remove cotter pin (15, figure 7-11), nut (1 4), washers (11), and bolt (12) from control tube (13) and disconnect control tube from bottom of servo valve.

TM 55-1520-210-23-2

NOTE

When disconnecting hydraulic hose assemblies (19 or 20), a small amount of fluid seepage may occur and will require placing a container under fittings of irreversible valve. Disconnection of hose assemblies not required if irreversible valve is not being removed.

(5) Place a container under hose assemblies (19 and 20) to catch fluid seepage and disconnect hose assemblies from fittings of irreversible valve. Install covers to connectors of hose assemblies and fittings.

(6) Remove irreversible valve from hydraulic servo valve (paragraph 7-94).

(7) Install covers on open ports of irreversible valve and hydraulic servo valve.

(8) Remove cotter pin (5), nut (2), washer (3) and bolt (4) from clevis of hydraulic cylinder assembly (6).

(9) Remove nuts (9), washers (10), nut (7) and washer (8) attaching hydraulic cylinder (6) to support and remove hydraulic cylinder (6).

a.1. Hydraulic Servo Cylinder P/N 205-076-056-103 (6, figure 7-11)

Remove hydraulic cylinder assembly in accordance with the following procedures:

(1) Open transmission cowling (2, figure 2-18) and left side engine cowls (6 and 7).

(2) Remove soundproofing blankets and left side access doors (3 and 24) from pylon island in cabin area.

(3) Remove soundproofing blanket and access door (81) from pylon island in cabin area.

(4) Remove cotter pin (15, figure 7-11), nut (14), washers (11), and bolt (12) from control tube (13) and disconnect control tube from bottom of servo valve.

NOTE

When disconnecting hydraulic hose assemblies (19 or 20), a small amount of fluid seepage may occur and will require placing a container under fittings of servo valve.

(5) Place a container under hose assemblies (19 and 20) to catch fluid seepage and disconnect hose assemblies from fittings of

Install covers to connectors of hose assemblies and fittings.

(6) Remove cotter pin (5), nut (2), washer (3) and bolt (4) from clevis of hydraulic cylinder assembly (6).

(7) Remove nuts (9), washers (10), nut (7) and washer (8) attaching hydraulic cylinder (6) to support and remove hydraulic cylinder (6).

b. Hydraulic Servo Cylinder (33, figure 7-11). Remove hydraulic servo cylinder assembly in accordance with the following procedures:

(1) Open transmission fairing (2, figure 2-18) and open right side engine cowls (6 and 7).

(2) Remove soundproofing blankets and right side access doors (3 and 24) from pylon island in cabin area.

(3) Remove soundproofing blanket and access door (81) from pylon island in cabin area.

(4) Remove cotter pin (24, figure 7-11), nut (25), washers (26) and bolt (28) from control tube and disconnect control tube from bottom of servo valve.

NOTE

When disconnecting hydraulic hose assemblies (19 or 20), a small amount of fluid seepage may occur and will require placing a small container under fittings of irreversible valve.

(5). Place container under hose assemblies (19 and 20) to catch fluid seepage and disconnect hose assemblies from irreversible valve. Install protective dust covers to connectors of hose assemblies and fittings.

(6) Remove irreversible valve (paragraph 7-94).

(7) Remove cotter pin (36), nut (34), washer (35) and bolt (1) from clevis of hydraulic cylinder assembly (33).

(8) Remove three nuts (32), three washers (31), nut (30) and washer (29) attaching hydraulic cylinder (33) to support and remove hydraulic cylinder (33).

b.1 Hydraulic Servo Cylinder PN 205-076-056-101 (33, figure 7-11).

Remove hydraulic servo cylinder assembly in accordance with the following procedures:

(1) Open transmission fairing (2, figure 2-18) and open right side engine cowls (6 and 7).

(2) Remove soundproofing blankets and right side access doors (3 and 24) from pylon island in cabin area.

(3) Remove soundproofing blanket and access door (81) from pylon island in cabin area.

(4) Remove cotter pin (24, figure 7-11), nut (25), washers (26) and bolt (28) from control tube (27) and disconnect control tube from bottom of servo valve.

NOTE

When disconnecting hydraulic hose assemblies (19 or 20), a small amount of fluid seepage may occur and will require placing a small container under fittings of servo valve.

(5) Place a container under hose assemblies (19 and 20) to catch fluid seepage and disconnect assemblies from servo valve. Install protective dust covers to connectors of hose assemblies and fittings.

(6) Remove cotter pin (36), nut (34), washer (35) and bolt (1) from clevis of hydraulic cylinder assembly (33).

(7) Remove three nuts (32), three washers (31), nut (30) and washer (29) attaching hydraulic cylinder (33) to support and remove hydraulic cylinder (33).

NOTE

Servo cylinder PN 205-076-056-101 and 103. Due to increased physical size of servo, maneuvering the servo into position may seem harder than the old servo and may require extending, contracting, and turning the servo in relation to mount. Do not attempt to pry using a screwdriver or any hard object to position servo. In some aircraft interference may exist between the cylinder shield (P/N KSP9064-5) and a wire bundle directly below the angle structure that runs along right hand beam assembly and the top of opening for access cover. Wire bundle may be relocated to top side of angle by re-using and relocating existing clamps. Care should be taken to allow for adequate clearance between any structure and wire bundle to prevent chafing. The 45 degree fittings provided for 205-076-056-107 hydraulic connections should be discarded and not used in this application.

7-72. Disassembly—Hydraulic servo Cylinder Assembly (Cyclic Control) (AVIM). a. Remove components from hydraulic cylinder (figure 7-14) as follows:

Premaintenance requirements for disassembly of hydraulic servo cylinder assembly

Condition	Requirements
Model	All
Part No. or Serial No.	204-076-026, 205-076-038, 204-076-064 and 205-076-099
Special Tools	(T25 or T62.1)
Test Equipment	None
Support Equipment	None
Consumable Materiels	None
Special Environmental Conditions	Dust Free/Well Ventilated Area

(1) Place hydraulic servo cylinder assembly on a clean workbench in dust free area.

(2) Remove lockwire from nuts (3 and 10, figure 7-14).

(3) Using a plastic scraper, so as not to damage the threads on clevis (1), clean sealant from top of nut (3) and threads of clevis (1).

(4) Break torque on nut (3) and remove clevis (1), lock (2) and nut (3) from tube assembly (5).

(5) Remove nut (25), washers (26) and screw (27) from upper clamp (24). Remove upper clamp (24) from boot assembly (33).

(6) Remove nut (28), two washers (29) and screw (30) from lower clamp (31). Remove lower clamp (31) from flange (32).

(7) Remove boot assembly (33) and swivel joint flange (32) from tube assembly (5).

(8) Remove nut (6), lock (7), and tube assembly (5) from piston rod (8).

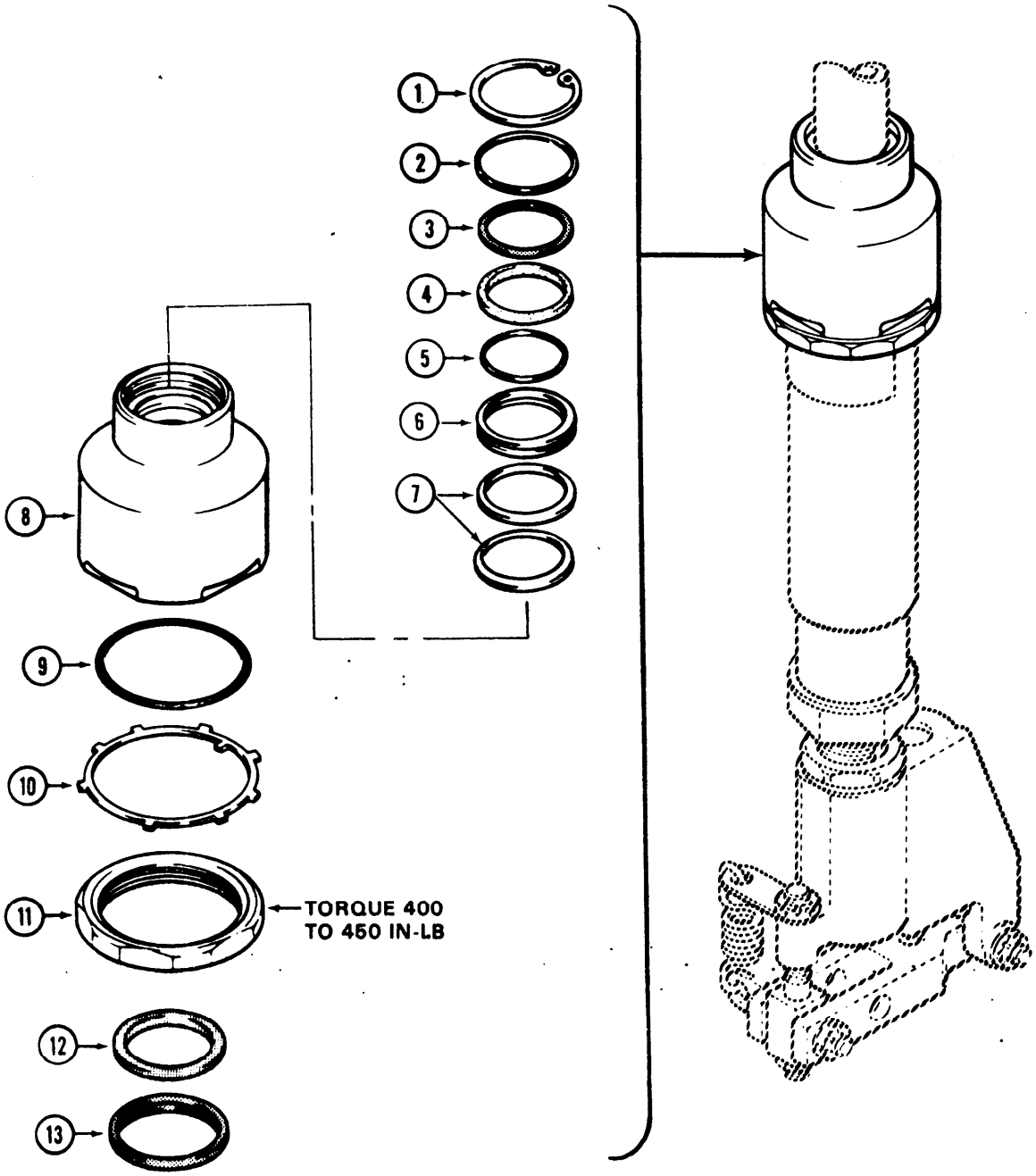

1. Retainer ring
2. Retainer
3. Scraper ring
4. Felt strip
5. Preformed packing
6. Glide ring
7. Backup
8. Cap
9. Preformed packing
10. Tab washer
11. Locknut
12. Ring seal
13. Cap seal

Figure 7-15. Hydraulic Cylinder Assembly P/N 100585-1 – Disassembly and Assembly

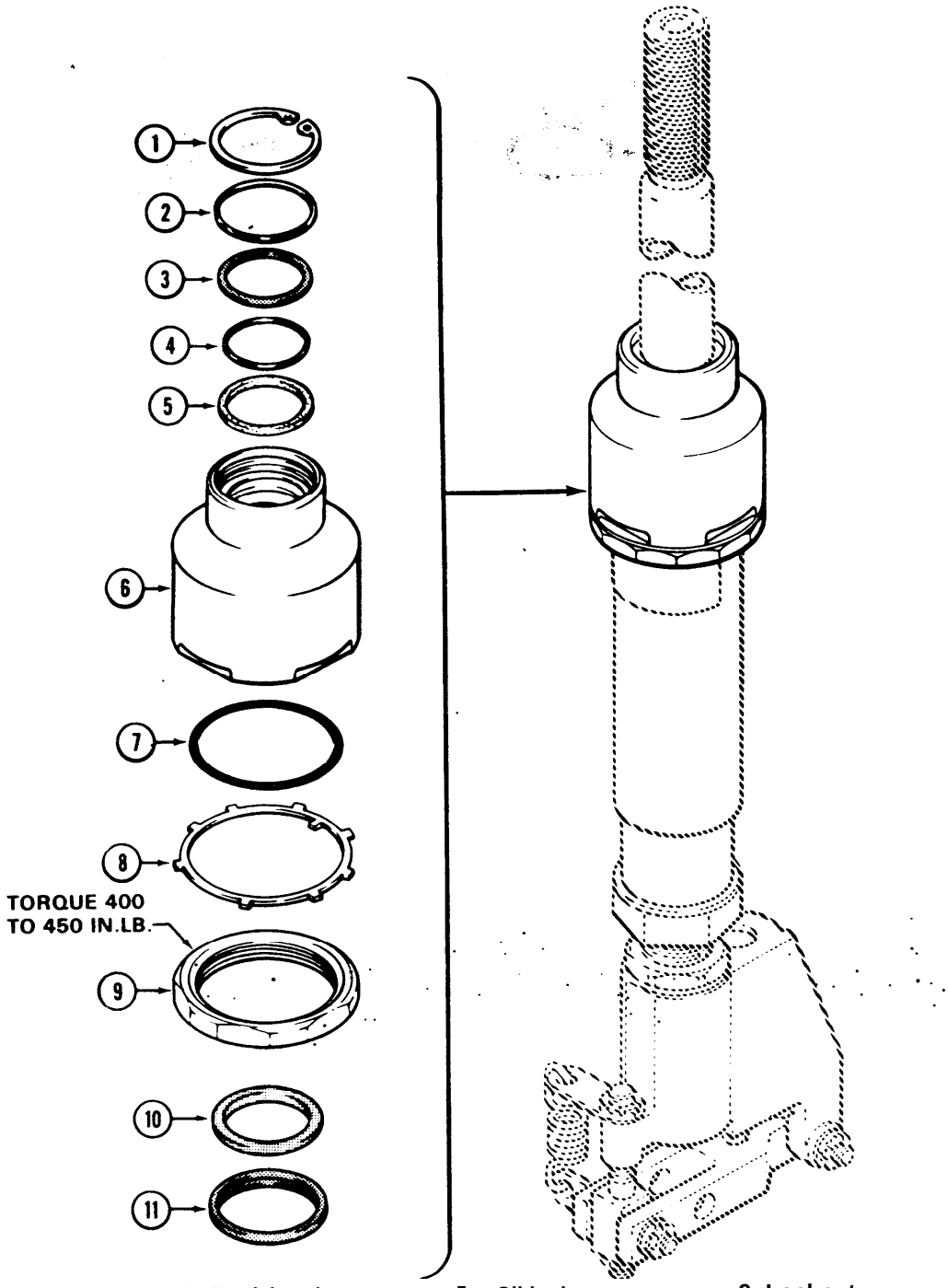

1. Retaining ring
2. Scraper retainer
3. Scraper
4. Preformed packing
5. Glide ring
6. Cap
7. Preformed packing
8. Tab washer
9. Locknut
10. Cap seal
11. Ring seal

Figure 7-16. Hydraulic Cylinder Assembly P/N 100585-7 — Disassembly and Assembly

NOTE

Disassembly of servo cylinder, PN 205-076-056, beyond this point is not authorized below depot level maintenance.

NOTE

Exercise piston rod to discharge residual fluid.

(9) Mount cylinder assembly in torque fixture (T25 or T62.1) (figure 7-17).

NOTE

Perform the following procedure only if tab lockwasher (10, figure 7-15) or (8, figure 7-16) is installed. If nut (23, figure 7-14) is installed, proceed to following step (12).

(10) Carefully straighten tangs of tab washer (10, figure 7-15) or (8, figure 7-16).

(11) Remove lockwire from nut (23, figure 7-14) and break torque on nut.

(12) Remove cylinder cap from upper end of cylinder assembly in accordance with applicable cylinder assembly. Refer to steps (13), (14), and (15) as applicable.

(13) Hydraulic servo cylinder assembly P/N 100585-1. Remove components and disassemble cap (8, figure 7-15) as follows:

(a) Break torque on locknut (11), back locknut away from cap (8).

(b) Unscrew cap (8) and remove cap from cylinder assembly.

(c) Remove retainer ring (1), retainer (2) and scraper (3) from cap (8).

(d) Remove felt strip (4) from cap (8).

(e) Remove packing (5) and two backups (7) from cap (8).

(f) Remove packing (9) from cap (8).

(g) Remove cap seal (13) and ring seal (12) from piston rod.

(h) Remove tab washer (10) and locknut (11) from cylinder assembly.

(14) Hydraulic servo cylinder assembly P/N 100585-7. Remove components and disassemble cap (6, figure 7-16) as follows:

(a) Break torque on locknut (9), back locknut away from cap (6).

(b) Remove cap (6) from cylinder assembly.

(c) Remove retaining ring (1), scraper retainer (2), scraper (3), packing (4) and glide ring (5) from cap (6).

(d) Remove packing (7) from cap (6).

(e) Remove cap seal (10) and ring seal (11) from piston rod.

(f) Remove tab washer (8) and locknut (9) from cylinder assembly.

(15) Hydraulic servo cylinder assembly P/N 105875. Remove component and disassemble cylinder cap (18, figure 7-14) as follows:

(a) Remove lockwire from key (22) and nut (23), break torque on nut (23), back nut away from cylinder cap (18).

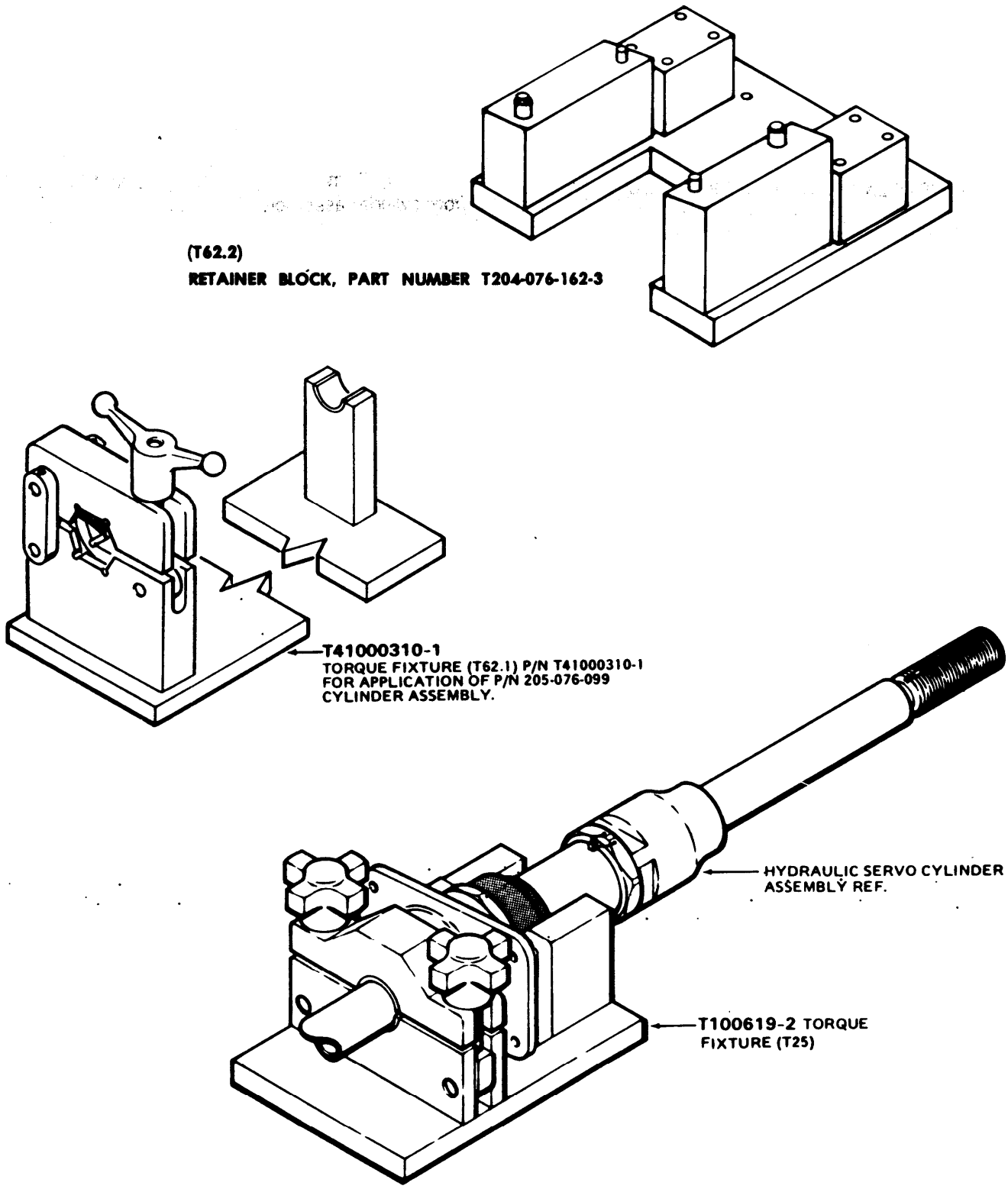

Figure 7-17. Tool Application Hydraulic Cylinder Assembly Supported in T100619-2 or T41000310-1 or T204-076-162-3 Torque Fixture

(b) Remove cylinder cap (18) from cylinder assembly.

(c) Remove retaining ring (13), retainer (14), wiper ring (15), packings (16 and 17) from cylinder cap (18).

(d) Remove packing (19) from cylinder cap (18).

(e) Remove cap seal (20), packing (21), key (22) and nut (23) from cylinder assembly.

(16) Hydraulic servo cylinder assembly. PN 20576-099. Remove KSP 6099-1 bearing (figure 7-14.1) as follows:

a. Remove lockwire, loosen nut (11) and remove servohead (29). Set servo assembly aside.

b. Mount cylinder assembly in torque fixture (T-62.1, figure 7-17).

c. Unbend tabs of washer (16) and remove retainer (15). Discard washer (16).

NOTE

Perform step d only if retainer (15) is to be overhauled.

d. Remove ring (12), retainer (13), and scraper (14) from the retainer (15).

e. Remove assembled parts consisting of shield assembly (1), nut (2), bearing (6), and housing (9) from servo cylinder (28).

f. Mount housing (9) in retainer (T-62.2). Cut lockwire on nut (2) and remove nut (2) using spanner wrench (T-2).

g. Remove bearing (6) from housing (9).

Premaintenance Requirements for Hydraulic Servo Cylinder (cyclic control) Assembly

Conditions	Requirements
Model	All
Part No. or Serial No.	All
Special Tools	None
Test Equipment	Fluorescent Penetrant Method Magnetic Particle Method
Support Equipment	None
Minimum Personnel Required	One
Consumable Materials	None
Special Environmental Conditions	None
References	TM 1-1520-256-23

7-73. Inspection—Hydraulic Cylinder Assembly (Cyclic Control). (Table 7-5 and Figures 7-18 through 7-21.)

a. Tube assembly (5, figure 7-14). Inspect tube assembly in accordance with the following inspection requirements and limits outlined in figure 7-18 and table 7-5.

(1) Inspect tube assembly (5) for thread damage, abrasions and dents (figure 7-18).

(2) Inspect tube assembly (5) for cracks. No cracks allowed. If a crack in the Hydraulic Servo Cylinder Tube Assembly is suspected, refer to TM 1-1520-256-23, Technical Manual Aviation Unit Maintenance (AVUM) and Aviation Intermediate Maintenance (AVIM) manual nondestructive inspection procedures for UH-1 helicopter series.

(3) Check security of rivets and bonded seams.

(4) Inspect the internal threaded area of upper and lower tube assembly (5) for corrosion damage.

b. Hydraulic Cylinder Assembly (AVIM).

(1) Inspect hydraulic cylinder assembly for cracks. No cracks allowed. If a crack in the Hydraulic Servo Cylinder Assembly is suspected, refer to TM 1-1520-256-23, Technical Manual Aviation Unit Maintenance (AVUM) and Aviation Intermediate Maintenance (AVIM) manual nondestructive inspection procedures for UH-1 helicopter series.

(2) Inspect upper and lower end of hydraulic cylinder assembly for evidence of leakage.

(3) Inspect external surfaces of hydraulic cylinder assembly and piston rod (8, figure 7-14) for nicks or scratches (figure 7-19 and table 7-5).

(4) Inspect external surfaces of hydraulic cylinder assembly and piston rod (8) for corrosion (figure 7-21 and table 7-5). Maximum diameter of damage, after repair, **0.0996** inch. Thread damage limits to piston rod are as follows: (a) Depth—**one-third** thread. (b) Length—**one-quarter** inch circumlative each segment.

c. Clevis.

(1) Inspect clevis (1, figure 7-14) for corrosion.

(2) Inspect clevis (1) for cracks. No cracks allowed.

(3) Inspect clevis (1) in accordance with limits outlined in figure 7-20 and table 7-5.

(4) Inspect clevis (1) for security.

d. Bearing Housing (AVIM).

(1) Inspect bearing housing (11, figure 7-14) for nicks, scratches, corrosion and sharp dents in accordance with limits outlined in figure 7-21.

(1.1) Inspect exterior surfaces only of bearing housing (11, figure 7-14) installed on servo cylinder 205-076-056.

e. Nut Assembly (AVIM).

NOTE

For nuts installed on servo cylinder P/N 205-076-056 only external surfaces can be inspected.

(1) Inspect nut assembly (10, figure 7-14) for corrosion and thread damage.

(2) Inspect nut assembly (10) for cracks. No cracks allowed.

(3) Inspect nut assembly (10) for security.

(4) Inspect nuts (3) and (6) for maximum thread damage as follows: (a) Depth: One-third of thread, (b) Length: 1.0 inch cumulative.

f. Boots.

(1) Inspect boot assembly (33, figure 7-14) for deterioration and tears.

(2) Inspect swivel joint flange (32) for tears.

(3) Inspect boot assembly (33) for security.

g. Attaching Hardware.

(1) Inspect hydraulic cylinder assembly and attaching components for missing or loose hardware.

(2) Inspect all attaching hardware to hydraulic cylinder assembly for cracks or corrosion. No cracks allowed. If a crack in any of the Hydraulic Cylinder Assembly Components is suspected, refer to TM 1-1520-256-23, Technical Manual Aviation Unit Maintenance (AVUM) and Aviation Intermediate Maintenance (AVIM) manual nondestructive inspection procedures for UH–1 helicopter series.

(3) Inspect the Hydraulic Servo Cylinder caps for cracks. No cracks allowed. If a crack in the cylinder cap is suspected, refer to TM 1-1520-256-23, Technical Manual Aviation Unit Maintenance (AVUM) and Aviation Intermediate Maintenance (AVIM) manual nondestructive inspection procedures for UH-1 helicopter series.

Table 7-5. Inspection Requirements for Hydraulic Cylinder Assembly (AVIM)

FIGURE 7- AND INDEX NO.		NOMENCLATURE	METHOD OF INSPECTION			TYPICAL DEFECTS	REFERENCE PARAGRAPH		REMARKS
			VISUAL	*MAGNETIC PARTICLE	**PENETRANT		INSPECTION	REPAIR	
14	1	Clevis	X	X		Cracks, nicks, scratches, corrosion, thread damage and security.	7-73	7-75	See figure 7-20.
14	2	Lock	X		X	Cracks, corrosion or deformed.	7-73	7-75	
14	3	Nut	X	X		Cracks, corrosion and thread damage.	7-73	7-75	
14	4	Decal	X			Torn or cracked.	7-73	Replace if damaged.	See figure 7-14.
14	5	Tube Assembly	X		X	Cracks, corrosion, bent, thread damage, loose or missing rivets and deformed.	7-73 and figure 7-18	7-75	See figure 7-18.
14	6	Nut	X	X		Cracks, corrosion and thread damage.	7-73	Replace if damaged.	
14	7	Lock	X			Cracks, corrosion or bent.	7-73	Replace if damaged.	
14	8	Piston Rod	X			Cracks, corrosion, bent, scratches and thread damage.	7-73		See figure 7-19.
14	9	Boot	X			Cracks, tears and deterioration.	7-73	7-75	
14	10	Nut	X		X	Cracks, corrosion, scratches and thread damage	7-73	7-75	
14	11	Housing	X		X	Cracks, corrosion, scratches and thread damage.	7-73	7-75 Replace if damaged.	See figure 7-21
14	12	Fitting	X			Corrosion, plugged up and thread damage.	7-73	Replace if damaged.	
14	13	Retaining Ring	X		X	Cracks, corrosion and bent.	7-73	Replace if damaged.	

Table 7-5. Inspection Requirments for Hydraulic Cylinder Assembly (AVIM) (Cont)

FIGURE 7- AND INDEX NO.		NOMENCLATURE	METHOD OF INSPECTION			TYPICAL DEFECTS	REFERENCE PARAGRAPH		REMARKS
			VISUAL	*MAGNETIC PARTICLE	**PENETRANT		INSPECTION	REPAIR	
14	14	Flat Washer	X			Cracks, corrosion, bent and wear.	7-73	Replace if worn or damaged.	
14	15	Wiper Ring	X			Cracks, corrosion, bent and wear.	7-73	Replace if worn or damaged.	
14	18	Cylinder Cap	X		X	Cracks, corrosion, nicks and scratches.	7-73	7-75.	
14	22	Key	X			Cracks, corrosion and bent.	7-73	Replace if damaged.	
14	23	Nut	X		X	Cracks, corrosion and thread damage.	7-73	Replace if damaged.	
14	24	Clamp, Upper	X			Cracks, corrosion, scratches and bent.	7-73	Replace if damaged.	
14	31	Clamp, Lower	X			Cracks, corrosion, scratches and bent.	7-73	Replace if damaged.	
14	32	Swivel Joint Flange	X			Cracked.	7-73	Replace if damaged.	
14	33	Boot Assembly	X			Torn or deteriorated	7-73	Replace if damaged.	
15	1	Retaining Ring	X			Cracks, corrosion, or bent	7-73	Replace if damaged.	
15	2	Retainer	X			Cracks, corrosion, bent and wear.	7-73	Replace if worn or damaged.	
15	3	Scraper Ring	X			Cracks, corrosion, bent and wear.	7-73	Replace if worn or damaged.	
15	6	Glide Ring	X			Cracks, bent, or wear.	7-73	Replace if worn or damaged.	
15	7	Backup	X			Cracks, bent, or wear.	7-73	Replace if worn or damaged.	

Table 7-5. Inspection Requirements for Hydraulic Cylinder Assembly (AVIM) (Cont)

FIGURE 7- AND INDEX NO.		NOMENCLATURE	METHOD OF INSPECTION			TYPICAL DEFECTS	REFERENCE PARAGRAPH		REMARKS
			VISUAL	*MAGNETIC PARTICLE	**PENETRANT		INSPECTION	REPAIR	
15	8	Cap	X		X	Cracks, corrosion, nick or scratches.	7-73	7-75	
15	10	Tab Washer	X			Cracks, corrosion, or bent	7-73	Replace if damaged.	
15	11	Lock Nut	X	X		Cracks, thread damage and corrosion.	7-73	Replace if damaged.	
16	1	Retaining Ring	X			Cracks, corrosion, or bent.	7-73	Replace if damaged.	
16	2	Scraper Retainer	X			Cracks, corrosion, or wear.	7-73	Replace if worn or damaged.	
16	3	Scraper	X			Cracks or wear.	7-73	Replace if worn or damaged.	
16	5	Glide Ring	X			Cracks or wear.	7-73	Replace if worn or damaged.	
16	6	Cap	X		X	Cracks, corrosion, nick, and scratches.	7-73	Replace if damaged.	
16	8	Tab Washer	X			Cracks, corrosion or bent.	7-73	Replace if damaged.	
16	9	Lock Nut	X			Cracks, corrosion or thread damage.	7-73	Replace if damaged.	

* Magnetic particle per MIL-I-1949 and TM 1-1500-204-23 series.

** Fluorescent penetrant per MIL-I-1949 and TM 1-1520-256-23.

Table 7-5. Inspection Requirements for P/N 205-076-056 Cylinder Hydraulic Assembly (AVIM)

FIGURE 7- AND INDEX NO		NOMENCLATURE	METHOD OF INSPECTION			TYPICAL DEFECTS	REFERENCE PARAGRAPH		REMARKS
			VISUAL	'MAGNETIC PARTICLE	**PENETRANT		INSPECTION	REPAIR	
14	1	Clevis	X	X		Cracks, nicks, scratches corrosion, thread damage and security	7-73	7-75	See figure 7-73
14	2	Lock	X		X	Cracks, corrosion, or.	7-73	7-75	
14	3	Nut	X	X		Cracks, corrosion and	7-73	7-75	
14	4	Decal	X			Torn or cracked	7-73	Replace If damaged.	See figure 7-14
14	5	Tube Assembly	X		X	Cracks, corrosion, bent thread damage, loose or missing rivets and deformed.	7-73 and figure 7-18	7-75	See figure 7-18
14	6	Nut	X	X		Cracks, corrosion and thread damage.	7-73	Replace If damaged.	
14	7	Lock	X			Cracks, corrosion or bent	7-73	Replace If damaged.	
14	*	Piston Rod	X			Cracks, corrosion, bent scratches and thread damage	7-73		See figure 7-19
14	9	Boot	X			Cracks, tears and	7-73	7-75	
14	10	Nut	X			Cracks, corrosion scratches and thread damage	7-73	7-75	
14	11	Housing	X			Cracks, corrosion, scratches and thread damage	7-73	7-75 Replace If	See figure 7-21
14	12	Fitting	X			Fracture/cracks		Replace If damaged.	

Table 7-5. Inspection Requirements for PN 205-076-056 Cylinder Hydraulic Cylinder Assembly (AVIM) (cent)

FIGURE 7- AND INDEX No.	NOMENCLATURE	METHOD OF INSPECTION			TYPICAL DEFECTS	REFERENCE PARAGRAPH		REMARKS
		VISUAL	*MAGNETIC PARTICLE	** PENETRANT		INSPECTION	REPAIR	
14 24	Clamp, Upper	X			Cracks, corrosion, scratches and bent.	7-73	Replace if damaged.	
14 31	Clamp, Lower	x			Cracks, corrosion, scratches and bent.	7-73	Replace if damaged.	
14 32	Swivel Joint Flange	x			Cracked.	7-73	Replace if damaged	
14 33	Boot Assembly	x			Tom or deteriorated	7-73	Replace if damaged.	

(3) Inspect all attaching hardware to hydraulic cylinder assembly for security.

h. Inspect holes in pilot input lever of servo valve and clevis (1, figure 7-14) for elongation.

i. Inspect Part Number KSP 9046-1 bearing shield (on P/N 205-076-099 and PN 205-076-056 hydraulic cylinders only) in accordance with the following limits:

(1) No cracks allowed.

(2) Depth of repair for nicks, corrosion, and scratches is 0.010 inch maximum. Number of repairs, not critical.

(3) Dents: 0.040 inch, Number of repairs, not critical.

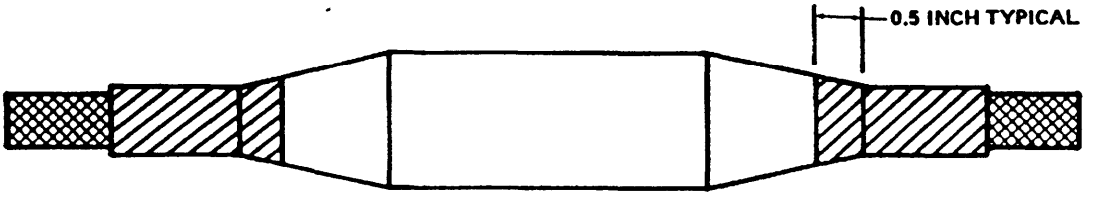

	DAMAGE AREA AND REPAIR ZONES		
TYPE OF DAMAGE			
NICKS, SCRATCHES AND DENTS	0.005 INCH	0.006 INCH	0.010 INCH
CORROSION	0.0025 INCH	0.005 INCH	0.005 INCH
MAXIMUM AREA PER FULL DEPTH REPAIR	0.25 SQ. IN.	0.10 SQ. IN.	NOT CRITICAL
MAXIMUM NUMBER OF REPAIRS	TWO PER SEGMENT		NOT CRITICAL
EDGE CHAMFER	0.020 INCH	0.020 INCH	NOT APPLICABLE

CRACKS — NONE ALLOWED

THREAD DAMAGE:

DEPTH: ONE-THIRD OF THREAD
LENGTH: ONE-QUARTER INCH
NUMBER: TWO PER SEGMENT

NOTES:

(1) The width of repair at any section shall not exceed one-third of the tube circumference.

(2) Material: 2024-T4 Al Aly, 1-1/2 OD X 0.083 wall thickness, per WW-T-785,Type 1, Temp-T3.

Figure 7-18. Tube Assembly Damage Limits — Hydraulic Cylinder Assembly, P/N 204-076-267

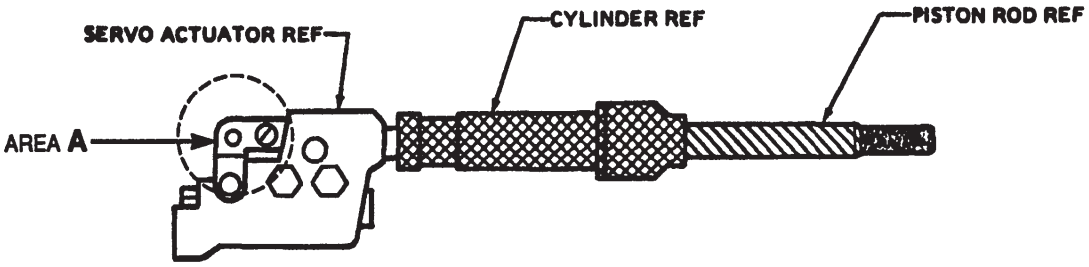

NICKS AND SCRATCHES — DEPTH: 0.025 INCH
DENTS — DEPTH: 0.003 INCH

THREAD DAMAGE —	DEPTH:	1/3 THREAD
	LENGTH:	1/4 INCH CUMULATIVE EACH SEGMENT

BLEND AND POLISH OUT ALL IMPERFECTIONS:

MINIMUM DIAMETER AFTER REPAIR IS 0.996 INCH.

AREA A	HOLE REPAIR:	DEPTH:	0.0005 INCH
		AREA:	1/4 CIRCLE (2 HOLES)

CRACKS — NONE ALLOWED

Blend and polish all nicks and scratches-depth 0.040 inch.

Figure 7-19. Hydraulic Cylinder Assembly (P/N 205-076-056) — Damage Limits (Sheet 1 of 2)

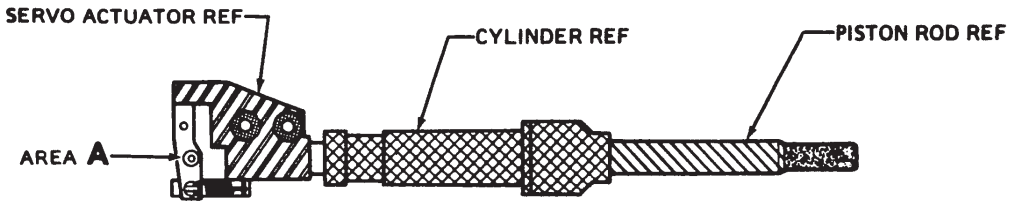

NICKS AND SCRATCHES — DEPTH: 0.040 INCH

DENTS — DEPTH: 0.003 INCH

NO DAMAGE ALLOWED THIS SURFACE.

NICKS AND SCRATCHES — DEPTH: 0.025 INCH

DENTS — DEPTH: 0.003 INCH

THREAD DAMAGE —	DEPTH:	1/3 THREAD
	LENGTH:	1/4 INCH CUMULATIVE EACH SEGMENT

BLEND AND POLISH OUT ALL IMPERFECTIONS:

MINIMUM DIAMETER AFTER REPAIR IS 0.996 INCH.

AREA A	HOLE REPAIR:	DEPTH:	0.0005 INCH
		AREA:	1/4 CIRCLE (2 HOLES)

CRACKS — NONE ALLOWED

Blend and polish all nicks and scratches-depth 0.040 inch.

Figure 7-19. Hydraulic Cylinder Assembly (P/N 204-076-052) — Damage Limits (Sheet 2 of 2)

NICKS, SCRATCHES, DENTS

DEPTH: 0.005 INCH
REPAIR AREA: 0.25 INCH
NUMBER OF REPAIRS: ONE PER EAR

DEPTH: 0.010 INCH
REPAIR AREA: 0.25 INCH
NUMBER OF REPAIRS: NOT CRITICAL

THREAD DAMAGE

DEPTH: 1/3 THREAD
LENGTH: 1/4 INCH CUMULATIVE

EDGE CHAMFER

0.030 INCH MAXIMUM

HOLE REPAIR

DEPTH: 0.002 INCH
REPAIR AREA: 1/4 CIRCLE (TWO HOLES)

Figure 7-20. Clevis, Hydraulic Cylinder Assembly (P/N 204-076-268) – Damage Limits

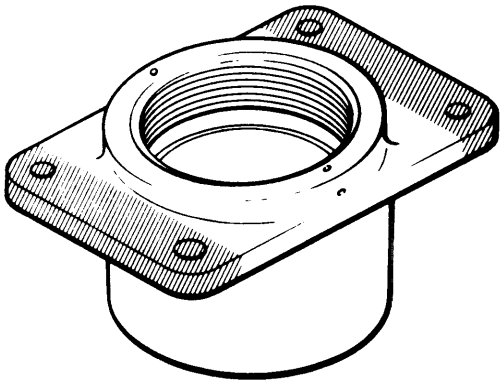

TYPE OF DAMAGE	DAMAGE AREA REPAIR SYMBOLS PARTICULAR	GENERAL
NICKS, SCRATCHES, AND SHARP DENTS	0.020 IN.	0.040 IN.
CORROSION	0.010 IN.	0.020 IN.
MAXIMUM AREA PER FULL DEPTH REPAIR	0.10 SQ. IN.	NOT CRITICAL
NUMBER OF REPAIRS	NOT CRITICAL	NOT CRITICAL
EDGE CHAMFER	0.040 IN.	0.060 IN.
BORE DAMAGE	0.002 INCH FOR 1/2 CIRCUMFERENCE	
THREAD DAMAGE:		
DEPTH:	ONE-THIRD OF THREAD	
LENGTH:	CUMULATIVE	
NUMBER:		
CRACKS	NO CRACKS ALLOWED	

Figure 7-21. Bearing Housing (P/N 204-076-201), Hydraulic Cylinder — Damage Limits

7-74. Cleaning—Hydraulic Cylinder Assembly (Cyclic Control).

WARNING

Cleaning materials are flammable and toxic. Avoid skin contact and breathing of solvent vapors.

a. Immerse and clean all metallic parts in solvent (C261). Pay particular attention to passages and threaded areas.

b. Use a stiff-bristled, non-metallic brush moistened with solvent (C261) to remove caked dirt from parts.

WARNING

Goggles will be worn when using compressed air. Do not allow more than 5 psi air pressure to come in contact with skin.

c. Dry all parts with compressed air at 15 psig (maximum) pressure.

d. If parts are not to be placed into immediate use after cleaning, flush parts with hydraulic fluid (C131), wrap with barrier material (C115) and place in a dust-free container.

e. Clean inner and outer areas of boot assembly (33, figure 7-14) with mild detergent soap (C101) and warm water. Rinse thoroughly and allow to air dry or wipe with clean cloth.

7-75. Repair or Replacement—Hydraulic Cylinder Assembly (Cyclic Control).

Premaintenance requirements for repair of hydraulic servo cylinder assembly (cyclic control)

Condition	Requirements
Model	All
Part No. or Serial No.	204-076-026, 205-076-038, 204-076-064 and 204-076-099
Special Tools	None
Test Equipment	None
Support Equipment	None
Minimum Personnel Required	One
Consumable Materials	(C1), (C62), (C68), (C312), (C234) (C261)
Special Environmental Conditions	Dust Free/Well Ventilated Area

a. Deleted.

b. Service and bleed hydraulic system after replacing hydraulic cylinder assembly (paragraphs 7-6 and 7-8).

c. Replace any lockwire and cotter pins removed.

d. Replace all packings and seals.

e. Replace tab washers (10, figure 7-15 and 8, figure 7-16) if unserviceable.

(1) Deleted.

(2) Deleted.

(3) Deleted.

(4) Apply sealant (C245) to threaded portions of clevis and control tube (5) to seal tube when installing clevis. Wipe away exposed sealant.

f. Cylinder Assembly.

(1) Any cracks or cylinder assembly requires replacement of part. Tag and send damaged cylinder assembly to depot maintenance for overhaul.

(2) Leakage from the cylinder assembly, in excess of that allowed in paragraph 7-70m., requires replacement of part.

(3) Minor corrosion to external surfaces of cylinder assembly may be repaired by sanding corroded area with 600 grit sandpaper (C68) to original finish.

(4) Minor nicks and scratches are acceptable, provided the damage area is sanded with 600 grit sandpaper (C68) to its original finish. Use polishing cloth (C1) or equivalent, to polish out minor scoring on aluminum parts. Thoroughly clean any polished parts with solvent (C261).

g. Clevis. Inspect clevis (1, figure 7-14) in accordance with limits outlined in figure 7-20 and table 7-5.

h. Bearing Housing—Inspect exterior surfaces only in accordance with limits outlined in figure 7-21 and table 7-5.

i. Nut Assembly—Inspect exterior surfaces only in accordance with limits outlined in paragraph 7-73 and table 7-5.

j. Boot. Any cracks, tears or deterioration to boot assembly (9 or 33, figure 7-14) requires replacement of part. No repairs allowed.

k. Flange. Any damage to swivel joint flange (32) requires replacement of part.

l. Attaching hardware.Replace any damaged hardware.

7-75.1 Repair or Replacement—Hydraulic Cylinder Assembly (Cyclic Control) PN 205-076-056.

Premaintenance requirements for repair of hydraulic servo cylinder assembly (cyclic control)

Condition	Requirements
Model	All
Part No. or Serial No.	205-076-056
Test Equipment	None
Support Equipment	None
Minimum Personnel Required	One
Consumable Materials	
Special Environmental Conditions	Dust Free/Well Ventilated Area

a. Service and bleed hydraulic system after replacing hydraulic cylinder assembly (paragraphs 7-6 and 7-8).

b. Replace any lockwire and cotter pins removed.

c. Repair or replace all parts which prove defective. Do not attempt to repair delicate parts or surfaces. Replace damaged parts rather than attempt difficult or extensive repairs.

d. Repair components of hydraulic cylinder assembly per steps below:

(1) Tube assembly (5, figure 7-14).

WARNING

Use paint and chemical film material in a well ventilated area. Avoid skin contact and breathing of spray mist.

(a) Remove clevis polish nicks, corrosion and scratches with 600 grit sandpaper (C241) and treat repair area with chemical film material (C62). Touch-up treated area with primer (C312) or primer (C206). See figure 7-18 for damage limits.

(b) Any cracks to tube assembly 5, figure 7-14 requires replacement of part.

(c) Deleted.

(d) Replace decal (4) when damaged.

(e) Inspect the internal threaded area of upper and lower tube assembly (5) fittings for corrosion damage (area A and B, figure 7-12). Replace tube assembly if corrosion is found. If no corrosion is noted at time of inspection, flush tube assembly (5, figure 7-14) with primer (C312) as follows:

NOTE

For new cylinder assemblies that have tubes attached, it is not necessary to remove the tube in order to accomplish the flushing procedure. Remove the rod end or clevis (1) from upper end of tube (5) and proceed with flushing operation as outlined in following sub-step. In the event a replacement tube is not available, the tube may be continued in service by applying primer (C312) to the inner circumference of the end fittings. By this application, the corrosion will be temporarily retarded until a replacement tube becomes available.

NOTE

Disassembly and Assembly of P/N 205-076-056-107 is not authorized at AVUM or AVIM. Paragraph 7-76 does not apply to this assembly.

7-76. Assembly-Hydraulic Servo Cylinder Assembly (Cyclic Control) (AVIM).

Premaintenance requirements for assembly of hydraulic servo cylinder assembly (cyclic control)

Conditions	Requirements
Model	All
Part No. or Serial No.	204-076-026, 204-076-038, 204-076-064 and 205-076-099
Special Tools	(T24), (T25), or (T62.1)
Test Equipment	None
Support Equipment	None
Minimum Personnel Required	One
Consumable Materials	(C130 or C131) (C155)
Special Environmental Conditions	Dust Free/Well Ventilated

a. Install KSP 6099-1 bearing (figure 7-14.1) on hydraulic cylinder assembly, P/N 205-076-099 as follows:

NOTE

Step (1) need not be completed unless retainer (15) was disassembled.

(1) Install scraper (14) in retainer (15) so that lip on scraper faces away from threaded end of retainer. Then install retainer (13) on top of scraper (14). Then install snap ring (12) in outermost groove of retainer with rounded side of ring facing scraper.

(2) Mount housing (9) in retainer (T-62.2, figure 7-17) and install bearing (6) into main bore of housing.

(3) Screw nut (2) into housing assembly (9) finger tight

(4) Torque nut (2) using spanner wrench (T-2) to 1100 to 1180 inch-pounds of torque.

(5) Install lockwire (C-155) on nut (2), only one positive safety required.

(6) Slide shield (1) with the clamp installed and nut and bolt partially tightened onto servo cylinder (28).

(7) Install bearing house (9) on servo cylinder (28).

(8) Install new tab washer (16) to fit into notches on end of servo cylinder. (28)

(9) Install assembled retainer (15) on piston and screw into cylinder tightened finger tight.

(10) Torque retainer (15) 600 to 650 inch-pounds. Bend tang of washer (16) that aligns with flat on retainer (15) against flat (See figure 7-12).

(11) Screw nut (11) onto piston rod (25) place washer (10) on piston rod with tab facing away from nut (11).

(12) With servo cylinder piston in the full extended position, carefully screw servohead (29) onto piston rod to bottom then back off 1/2 to 1-1/2 turns, then tighten nut (11) against washer (10) finger tight.

(13) Align groove in threads on piston with notch in servohead assembly. Tighten nut (11) on piston until it bottoms against servohead. Torque nut (11) 200 to 225 inch-pounds. Lockwire nut (11) with (C-155).

(14) Move shield (1) along the servo (28) until contact is made by shield rubber against nut (2). Tighten clamp and bolt on shield.

b. Assemble and install cap (6, figure 7-16) to hydraulic cylinder assembly PN 100585-7 as follows:

NOTE

All packings and ring seals will have hydraulic fluid (C130 or C131) applied to them prior to assembly.

(1) Install nut (9) and tab washer (8) on cylinder assembly

CAUTION

Concave surface of ring seal (11) must be against cap seal (10) (concave side up).

(2) Install ring seal (11) into groove in piston rod (8, figure 7-14).

(3) Install cap seal (10, figure 7-16) on top of ring seal (11) and within packing groove.

(4) Install packing (7) into groove in large end of cap (6).

CAUTION

Concave surface of glide ring (5) must be against packing (4) (concave side up).

(5) Install scraper (3) into cap (6) (with lip on scraper facing up) and secure with retaining ring (1) (placing retaining ring in outermost groove in cap with rounded side of retaining ring facing down).

(6) Install hydraulic cylinder assembly in torque fixture (T25) or torque fixture (T62.1).

CAUTION

Groove in threaded area on cylinder must align with notch in cap (6). If necessary, beck off cap (6) to first notch for alignment.

(7) Install cap (6) assembly to cylinder assembly.

NOTE

Actual torque requirements is 400 TO 450 inch-pounds. Using torque fixture (T25) or torque fixture (T62.1) and a 10 inch torque wrench will provide the required torque while indicating 304 TO 380 inch-pound.

(8) Using a 10 inch torque wrench and torque fixture (T25) or torque fixture (T62.1) torque locknut (9) 304 TO 380 inch-pounds to acquire 400 TO 450 inch-pounds. Bend tangs (minimum of two) of tab washer against nut.

(9) Remove hydraulic cylinder assembly from torque fixture (T25) or torque fixture (T62.1).

c. Assemble and install cap (8, figure 7-15) to hydraulic cylinder assembly P/N 100585-1 as follows:

NOTE

All internal parts of cylinder assembly will have hydraulic fluid (C130 or C131) applied to them prior to assembly.

(1) Install locknut (11) and tab washer (10) on cylinder assembly.

CAUTION

Concave surface of ring seal (12) must be against cap seal (13) (concave side up).

(2) Install ring seal (12) into groove on piston rod (8, figure 7-14).

(3) Install cap seal (13, figure 7-15) on top of ring seal (12) and within packing groove.

(4) Install packing (9) into groove in large end of cap (8).

CAUTION

Concave surface of glide ring (6) must be placed opposite of backup (7) (concave side up).

(5) Install two backups (7), glide ring (6) and packing (5) into small end of cap (8).

(6) Install scraper ring (3) into cap (8) (with lip on scraper facing up), retainer (2) and secure with retaining ring (1) (placing retaining ring in outermost groove in cap with rounded side of retaining ring facing down).

CAUTION

Groove in threaded area on cylinder must align with notch in cap (8). If necessary, back off cap (6) to first notch for alignment.

(7) Install hydraulic cylinder assembly in torque fixture (T25) or torque fixture (T62-1).

(8) Install assembled cap (8) to cylinder assembly.

NOTE

Actual torque requirement is 400 TO 450 inch-pound. Using torque fixture (T25) or torque fixture (T62.1) and a 10 inch torque wrench will provide the required torque while indicating 304 TO 380 inch-pounds.

(9) Using a 10 inch torque wrench and torque fixture (T25) or torque fixture (T62.1) torque locknut (11) 304 TO 380 inch-pounds to acquire 400 TO 450 inch-pounds torque. Bend tangs (minimum of two) of tab washer (10) against nut.

d. Assembly of servo cylinder assembly P/N 205-076-056-101 requires the modification of tube assembly P/N 204-076-267-1. This modification is only required on the left cyclic servo installation and permits proper clearance after installation between servo and surrounding airframe. Tube assemblies (204-076-267-1) are procured with both slots “1” and “2”, however tube assemblies procured before January 1994 have only one slot and will require the above modification. Modify tube (item 5, figure 7-14) as follows:

(1) Vibro Etch the number “1” as shown in figure 7-22.1 next to the present slot in the upper end of tube.

(2) Machine one additional slot as shown in figure 7-22.1. Being careful not to damage the threads. Break all sharp edges. Vibro etch the number “2” next to this new slot.

(3) Coat machined surface with epoxy polyamide primer and finish with black polyurethane paint.

(4) Continue with assembly by placing lock (7, figure 7-12), with lockwire hole down inside nut (6). Align lock with slot in piston rod (8) and thread nut (6) and tube assembly (5) on piston rod (8).

e. Adjust hydraulic cylinder assembly in accordance with dimension A, figure 7-12, and torque nut (6, figure 7-14) 1500 TO 1800 inch-pounds and secure with lockwire (C155). Refer to paragraph 7-89 for details regarding the collective assembly.

f. Install preventive boot (33) or P/N KSP9046-1 shield, on hydraulic cylinder assembly as follows (205-076-099 cylinder assemblies only, refer to following step g for installation procedures):

(1) Compress and insert swivel joint flange (32) into lower end of boot and engage flange lip in collar.

(2) Slip swivel joint flange (32) with boot (33) down over tube assembly (5) and cylinder.

(3) Position lower clamp (31) around swivel joint flange (32) and install screw (30), two washers (29) and nut (28).

(4) With piston rod (8) in full up position adjust boot assembly (33) 20 inches from top flange of tube assembly (5) as shown in detail B. Position upper clamp (24) around top of boot assembly (33) and install screw (27), two washers (26) and nut (25).

(5) Check for proper security of boot (9).

NOTE

The following step g. applies to P/N 205-076-099 cylinders only.

g. Install shield to top of cylinder as follows (view A, figure 7-14):

(1) Position shield to cylinder.

(2) Install clamp, screw, and nut.

h. Place lock (2) into nut (3). Align lock (2) with slot in clevis (1) and thread nut (3) on clevis.

CAUTION

When assembling servo cylinder assemblies care should be taken that correct slot is used in tube assembly depending on which servo cylinder is being installed.

i. Install and position clevis (1) as shown in figure 7-14, to tube assembly (5) and set adjustment of clevis at 2.53 inches as shown in figure 7-12. This is an initial dimension, which may be slightly changed during rigging. When assembling the left cyclic servo cylinder assembly the following is applicable:

(1) If P/N 205-076-099-5 servo cylinder is used, align slot in clevis with slot “1” in tube assembly.

(2) If PIN 205-076-056-107 servo cylinder is used, align slot in clevis with slot “2” in tube assembly. The adjustment of the clevis at 2.53 inches should be attempted as close as possible. The exact measurement may not be achieved.

NOTE

This is a mandatory inspection point.

j. Torque nut (3, figure 7-14) 480 TO 600 inch-pounds and secure with lockwire (C155).

k Deleted.

l. Remove hydraulic cylinder assembly from torque fixture (T25) or torque fixture (T62.1).

7-77. Lubrication - Hydraulic Servo Cylinder Assembly (Cyclic Control). Apply grease to hydraulic cylinder assembly (6 or 33, figure 7-11) in accordance with figure 1-6. (P/N 205-076-099 and 205-076-056 do not require lubrication).

7-78. Installation - Hydraulic Servo Cylinder Assembly (Cyclic Control).

NOTE

Servo units are preserved with MIL-H-6083. Assure all preservation hydraulic oil is flushed from the unit with MIL-H-83282 prior to installation.

a New Servocylinder Purge Procedure - Prior to installing a new (unused) servocylinder on an aircraft, it is necessary to purge the MIL-H-6083 preservation fluid from the assembly. Fluid purge can be accomplished using one of the following two methods:

(1) if a hydraulic mule, hydraulic test stand, or AGPU is available (must have MIL-H-83282 fluid):

(a) Connect pressure line from mule to the pressure port on the servo.

(b) Conned a hydraulic line from the servo return port to a waste container. Do not allow preservative fluid to contaminate mule or AGPU reservoir.

(c) Gradually apply pressure (approximately 1000 PSl) to the servo with the mule. Operate the input lever to stroke the cylinder to the fully extended end retracted positions. Repeat this process for 3 cycles (extend, retract equals one cycle,while collecting the return fluid in the waste container.)

(2) Manual purge (if equipment in (1), is not available):

(a) Locate test port number 2 (test 2) on servo housing.

CAUTION

Some residual pressure may exist in the internal accumulator. Therefore, remove the plug slowly.

(b) Cut lockwire on the test 2 port hexagonal plug and slowly remove the plug and packing.

(c) Manually pump the servocylinder through full range of motion for no less than 10 cycles. Attention must be directed to the relative phasing of the input lever and the cylinder movement in order to effect manual pumping. Pumping is accomplished by moving the valve head toward and away from the cylinder with the input lever held in the direction of movement in each case. Collect discharged fluid in a waste container. The total amount of fluid discharged will vary from servo to servo, but the majority of the fluid will be discharged during the first 5 to 6 actuations.

(d) Wipe area with a dean cloth, re-install the packing (if original packing is damaged, replace with MS28778-2, NSN 5330-00-803-7208) with plug. Torque plug to 40 TO 50 inch pounds.

(e) Lockwire (using 0.020 lockwire) plug and apply torque seal stripe.

b. Dispose of discharged fluid end proceed with installation in accordance with TM 55-1520-210-23.

c. Install hydraulic cylinder assembly (33, figure 7-11) in accordance with the following procedures:

NOTE

An improved servo cylinder (P/N 205-076-056-107) has bean developed to replace the current servo cylinder and irreversible valve. Servos are functionally interchangeable and maybe used in mixed installations with current servos.

(1) Position servo valve as shown on view A-A figure 7-11. Lower hydraulic cylinder assembly (33) onto studs of cylinder support.

(a) Fore and Aft (right) Cyclic control the right forward and left rear quadrant. Due to increased physical size of servo, maneuvering the servo into position may seem harder than the old servo and may require extending, contracting, and turning the servo in relation to mount. Do not attempt to pry using a screwdriver or any had object to position servo. In some aircraft interference may exist between the cylinder shield (P/N KSP9064-5) and a wire bundle directly below the angle structure that runs along right hand beam assembly and the top of opening for access cover. Wire bundle may be relocated to top side of angle by re-using and

relocating existing clamps. Care should be taken to allow for adequate clearance between any structure and wire bundle to prevent chafing. The 45 degree fittings provided for P/N 205-076-056-107 hydraulic connections should be discarded and not used in this application.

(b) Lateral (left) Cyclic controls the left forward and right rear quadrant. As with fore and aft cyclic, installation of servo in this application may seem harder and may require extending, contracting, and turning the servo in relation to mount. Servos should be position with control input lever facing aft. This 180 degrees out from the old servo installation. In lateral cyclic application the pressure port on servo should be relocated to alternate pressure port which is also located on the bottom of servo housing. Original pressure port should be plugged. Also, the 45 degree hydraulic fittings provided on servo should be positioned so that hydraulic lines are routed forward of tube assembly P/N 204-001-018-27 but not chafing the tube or structure. To prevent hydraulic lines from chafing each other, a standoff should be used and position 5 to 6 inches from the end of hydraulic line using two (2) loop clamps (MS21122-5), one machine screw (MS27039-1-08), one self locking nut (MS21042L3) and one flat washer (AN960PD10L).

(2) Install washer (29), nut (30), washers (31) and nuts (32). Tighten nuts (30 and 32) evenly using standard torque. Paint slippage marks.

(3) Install irreversible valve (22) to servo valve.

(4) Check position of clevis (view A-A, figure 7-11) on hydraulic cylinder assembly and connect clevis to swashplate assembly. Install bolt (1, figure 7-11), washer (35) and nut (34) and secure nut with cotter pin (36).

(5) Remove covers from fittings (19) and install hose assemblies (19 and 20) to fittings.

WARNING

Make sure bolt (28) can be rotated by hand after installation of washers (26), self-locking castellated nut (25), and cotter pin (24).

NOTE

Add washers (26) as necessary to achieve 1/32 inch or less sideplay between bolthead and hydraulic lever.

(6) Position control tube (27) to lever to servo valve and install bolt (28), two washers (26) and nut (25). Torque nut (25) to a maximum of 25 inch-pounds, bolt must turn freely. Secure nut (25) with cotter pin (24).

(7) Adjust servo cylinder assembly (paragraph 7-69).

(8) Rig hydraulic cylinder assembly (33, figure 7-1) to cyclic control system (paragraph 11-55).

(9) Torque nut (3, figure 7-14) **480 TO 600** inch-pounds and secure with lockwire (C 155)

(10) After final adjustment, completely seal tube assembly thread areas (Note B, figure 7-12).

(11) Perform operational check and check for leaks (paragraph 7-79) of hydraulic cylinder (6, figure 7-11).

(12) Install access door (81, figure 2-18) and soundproofing blanket to pylon island in cabin area.

(13) Install left side access doors (3 and 24) and soundproofing blanket to left side of pylon island in cabin area.

(14) Close and secure left engine cowls (6 and 7).

d. Install hydraulic cylinder assembly (P/N 205-076-056-103) (33, figure 7-11) in accordance with the following procedure:

(1) Position servo valve as shown on view A-A figure 7-11. Lower hydraulic cylinder assembly (33) onto studs of cylinder support. Due to the larger size of this servo assembly it may be necessary to extend or retract servo assembly and turn servo in relation to mount while installing to permit servo cylinder to fit through cylinder support on the aircraft.

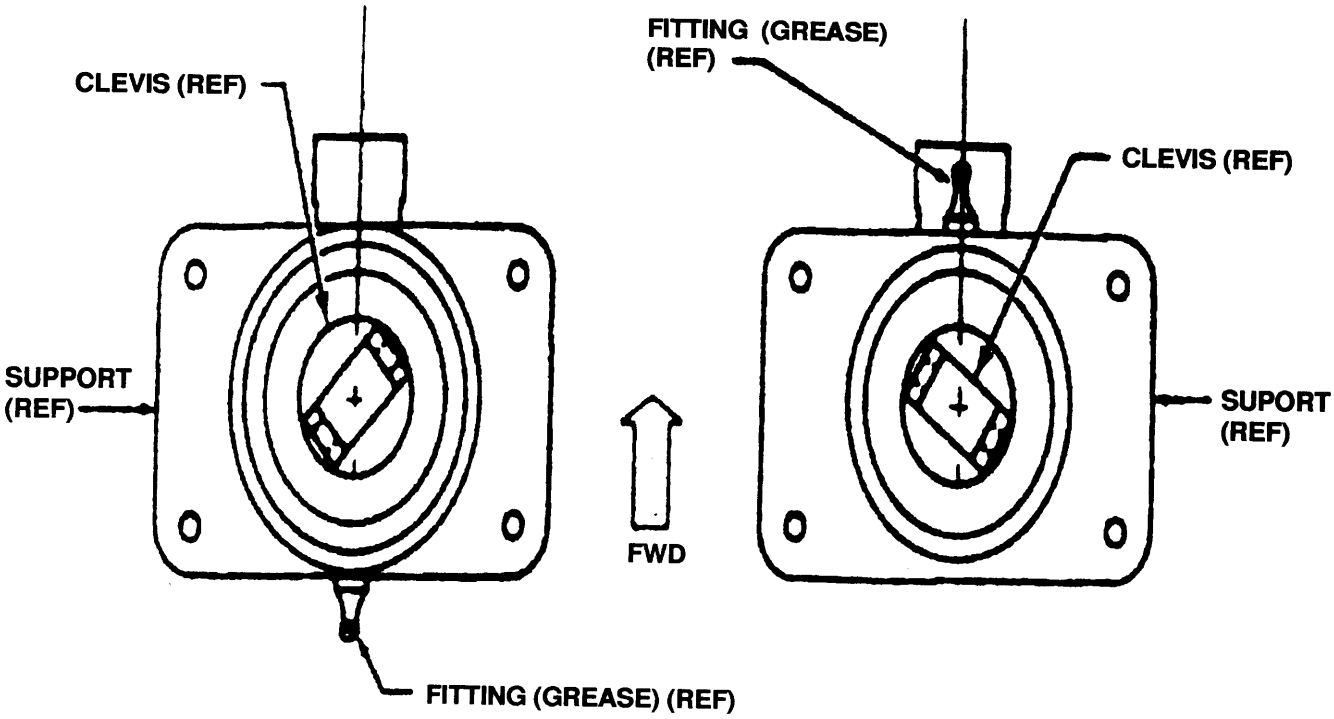

VIEW LOOKING DOWN

NOTE

The above clevis position is for the following hydraulic cylinder assemblies only.

PART NUMBER

204-076-026-19
204-076-026-21
204-076-064-9
204-076-064-11
204-076-070-3
205-076-070-5
205-076-038-3
205-076-038-5
205-076-099-3
205-076-099-5

NOTE

The above clevis position is for the following hydraulic cylinder assemblies only.

PART NUMBER

204-076-026-17
204-076-064-7
204-076-070-1
205-076-038-1
205-076-099-1

Figure 7-22. Positioning of Clevis to Servo Cylinder — Hydraulic Cylinder Assembly (Cyclic Control)

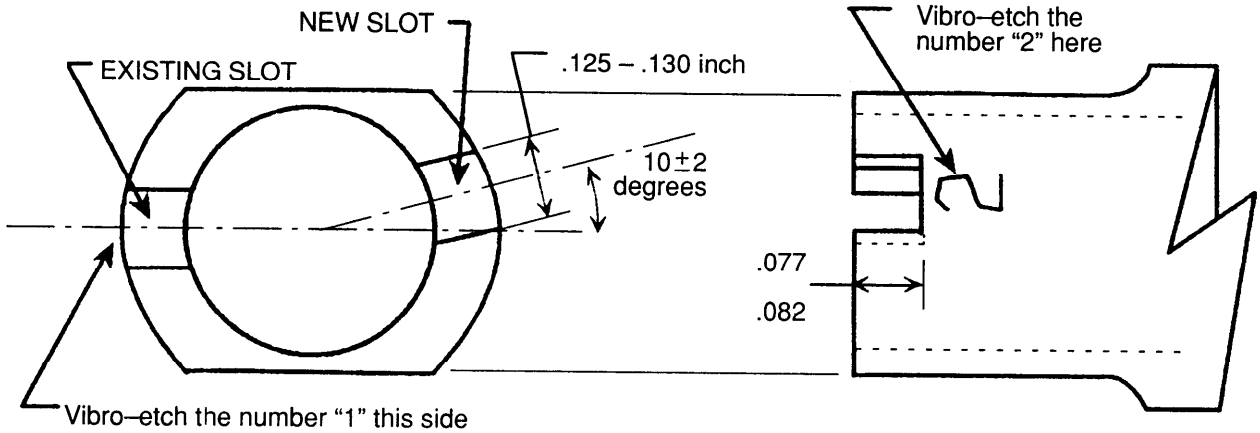

TUBE ASSEMBLY P/N 204-076-267-1
VIEW LOOKING DOWN FROM ABOVE.

SIDE VIEW

Figure 7-22.1. Modification of Tube Assembly, Left Cyclic

NOTE

On some aircraft interference may exist between the cylinder shield (P/N KSP9046-5) and a wire bundle which is located below and attached to an angle structure runnng fore and aft along the right hand beam assembly. This wire bundle may be relocated to topside of the angle using and relocating existing clamps Care should be taken to allow for adequate clearance between any structure and wire bundle to prevent chafing.

(2) Install washer (29), nut (30), washers (31) and nuts (32). Tighten nuts (30) and (32) evenly using standard torque. Paint slippage marks.

(3) Check position of clevis (view A-A, figure 7-11) on hydraulic cylinder assembly and connect clevis to swashplate assembly. Install bolt (1) figure 7-11 washer (35) and nut (34) and secure nut with cotter pin (36).

(4) Discard 45 degree fittings provided on servo cylinder and replace with straight fittings (18). Install hose assemblies (19 and 20) to fittings (18).

WARNING

Make sure bolt (28) can be rotated by hand after installation of washers (26), self-locking castellated nut (25), and cotter pin (24).

NOTE

Add washers (26) as necessary to achieve 1/32 inch or less sideplay between bolthead and hydraulic lever.

(5) Position control tube (27) to lever of servo valve and install bolt (28), two washers (26) and nut (25). Torque nut (25) to a maximum of 25 inch-pounds, bolt must turn freely. Secure nut (25) with cotter pin (24).

(6) Adjust servo cylinder assembly (paragraph 7-69).

(7) Rig hydraulic cylinder assembly (33, figure 7-11) to cyclic control system (paragraph 11-55).

(8) Torque nut (3, figure 7-14) 480 to 600 inch-pounds and secure with lockwire (C155).

(9) After final adjustment completely seal tube assembly thread areas (Note B, figure 7-12).

(10) Perform operational check (paragraph 7-79) and check hydraulic cylinder (33, figure 7-11) for leaks. (Table 7-1).

(11) Install access door (81, figure 2-18) and soundproofing blanket to pylon island in cabin area.

(12) Install right access doors (3 and 24) and soundproofing blanket to right side to pylon island in cabin area.

(13) Close and secure right side engine cowls (6 and 7).

d.1. Install hydraulic cylinder assembly (6, figure 7-11) in accordance with the following procedure:

(1) Position servo valve as shown in view A-A, figure 7-11 and lower hydraulic cylinder assembly (6) onto studs of cylinder support.

(2) Install washer (8), nut (7), washers (10) and nuts (9). Tighten nuts (7, and 9) evenly using standard torque. Paint slippage marks.

(3) Check position of clevis of hydraulic cylinder assembly (figure 7-22) and connect clevis to swashplate assembly and install bolt (4, figure 7-11), washer (3) and nut (2). Secure nut with cotter pin (5).

CAUTION

Care should be taken that hose assemblies are not chafing the control tube (13) or any structure after installation.

WARNING

Make sure bolt (2) can be rotated by hand after installation of washers (11), self-locking castellated nut (14), and cotter pin (15).

NOTE

Add washer (11) as necessary to achieve 1/32 inch or less sideplay between bolthead and hydraulic lever.

(4) Position control tube (13) to lever of servo valve and install bolt (12, figure 7-11), washers (11), and nut (14). Torque nut (14) to a maximum of 25 inch-pounds both (12) must turn freely. Secure nut (14) with cotter pin (15).

(5) Perform operational check and check for leaks (paragraph 7-79) of hydraulic cylinder (6, figure 7-11).

(6) Install access door (81, figure 2-18) and soundproofing blanket to pylon island in cabin area.

(7) Install left side access doors (3 and 24) and soundproofing blanket to left side of pylon island in cabin area.

(8) Close and secure left engine cowls (6 and 7).

e. Install hydraulic cylinder assembly (P/N 205-076-056-101) (6, figure 7-11) in accordance with the following procedure:

(1) Position servo valve as shown in view A-A, figure 7-11 and lower hydraulic cylinder assembly (6) onto studs of cylinder support. Due to the larger size of this servo assembly it may be necessary to extend or retract the servo assembly and turn servo in relation to the mount while installing to permit servo cylinder to fit through cylinder support on the aircraft.

(2) Install washer (8), nut (7), washers (10) and nuts (9). Tighten nuts (7, and 9) evenly using standard toque. Paint slippage marks.

(3) Check position of clevis of hydraulic cylinder assembly (figure 7-22) and connect clevis to swashplate assembly and install bolt (4, figure 7-11), washer (3) and nut (2). Secure nut with cotter pin (5).

(4) Relocate 45° fitting (37, figure 7-11) from pressure port on servo to alternate pressure port on servo cylinder. Cap original pressure port with cap fitting removed from the alternate pressure port. Remove protective dust covers from 45° fitting (37) and install hose assemblies (19 and 20) to fitting (37). Hose assemblies should be routed forward of the control tube (13). Install a standoff consisting of items (38), (39), (40), and (41), figure 7-11, 5 to 6 inches from the end of hose assemblies to prevent chafing.

WARNING

Make sure bolt (12) can be rotated by hand after installation of washers (11), self-locking castellated nut (14), and cotter pin (15).

CAUTION

Care should be taken that hose assemblies are not chafing the control tube (13) or any structure after installation.

CAUTION

When installing or removing 45 degree fittings. Make sure the screen does not fall out of the hydraulic servo pressure port.

NOTE

Add washer (11) as necessary to achieve 1/32 inch or less sideplay between bolthead and hydraulic lever.

(5) Position control tube (13) to lever of servo valve and install bolt (12), figure 7-11, washers (11), and nut (14). Torque nut (14) to a maximum of 25 inch-pounds bolt (12) must turn freely. Secure nut (14) with cotter pin (15).

(6) Perform operational check and check for leaks (paragraph 7-79) of hydraulic cylinder (6, figure 7-11).

(7) Install access door (81, figure 2-18) and soundproofing blanket to pylon island in cabin area.

(8) Install left side access doors (3 and 24) and soundproofing blanket to left side of pylon island in cabin area.

(9) Close and secure left engine cowls (6 and 7).

7-79. Operations Check — Hydraulic Cylinder Assembly(Cyclic Control). a. Perform operational check of hydraulic cylinder assembly (6 and 33, figure 7-11) (paragraph 7-3).

b. Check hydraulic cylinder assembly (6 and 33) for leaks (table 7-l).

7-80. HYDRAULIC SERVO CYLINDER ASSEMBLY (COLLECTIVE CONTROL).

7-81. Description — Hydraulic Servo Cylinder Assembly (Collective Control). There are two types of hydraulic servo cylinder assemblies that may be used in the collective control. Both reduce feedback forces and assist collective pitch control of the main rotor. One uses a hydraulic cylinder with an irreversible valve and the other incorporates the irreversible feature within the servo cylinder itself.

7-82. Adjustment — Hydraulic Servo Cylinder Assembly (Collective Control). a. Adjust collective hydraulic cylinder as shown in dimension A of figure 7-12 and paragraph 7-69.

b. Adjust clevis as shown in figure 7-12 and paragraph 7-69.

c. Rig collective hydraulic cylinder after installation procedures have been accomplished (paragraph 11-6).

d. When collective stick is creeping up during flight, bend tab (21, figure 7-23) down. Bend tab (21) up when collective stick is creeping down.

7-83. Inspection (Acceptance/Rejection Criteria) — Hydraulic Servo Cylinder Assembly (Collective Control). (Paragraph 7-70, 7-73, figures 7-18 through 7-21 and table 7-5).

7-84. Removal-Hydraulic Servo Cylinder Assembly (Collective Control). a. Gain access to cylinder as follows:

(1) Open transmission cowling (2, figure 2-18) and left engine cowls (6 and 7).

(2) Remove cargo hook assembly (paragraph 14-151).

(3) Remove soundproofing blanket and left access doors (23 and 24).

b. Disconnect and remove cylinder assembly (6, figure 7-23) as follows:

(1) While gaining access through cargo hook opening, remove cotter pin (12), nut (13), washers (9) and bolt (10) from lever of servo valve and remove tube assembly (11).

NOTE

When disconnecting hydraulic hose assemblies (16 and 17), a small amount of fluid seepage may occur and will require placing a small container under fittings of irreversible valve. (See detail A.)

(2) Disconnect hose assemblies (16 and 17) from irreversible valve.

(3) Remove irreversible valve from hydraulic servo valve (paragraph 7-102).

(4) Install protective covers to open ports of hydraulic servo and irreversible valves.

(5) If necessary, remove droop compensator jackshaft assembly and bracket on cylinder support (paragraph 4-129).

(6) Remove nuts (7) and washers (8).

(7) Remove nut (15) and washer (14).

(8) Remove cotter pin (3), nut (2), washer (4) and bolt (5) from clevis of hydraulic cylinder assembly and disconnect clevis from trunnion bearing (1) of lever assembly.

(9) Carefully rotating hydraulic cylinder assembly, lift hydraulic cylinder assembly from helicopter.

b.1. Hydraulic Servo Cylinder Assembly P/N 205-076-056-105.

(1) Open transmission cowling (2, figure 7-18) and left engine cowls (6 and 7).

(2) Remove cargo hook assembly (paragraph 14-285).

(3) Remove soundproofing blanket and left access doors (23 and 24).

7-85. Disassembly — Hydraulic Servo Cylinder Assembly (Collective Control) (AVIM).

NOTE

Disassembly procedures for collective hydraulic cylinder assembly are same as cyclic control hydraulic cylinder assembly, except for maintenance tasks outlined in the following steps.

a. Remove nuts (18, figure 7-23) and bolts (20) from stops (19).

b. Remove stops (19) from piston rod of collective hydraulic cylinder assembly (6).

b.1. Remove spring (22).

c. Disassemble hydraulic cylinder assembly (paragraph 7-72).

7-86. Inspection — Hydraulic Servo Cylinder Assembly (Collective Control) (AVIM). Inspect collective hydraulic cylinder assembly in accordance with inspection limits outlined in paragraphs 7-70 and 7-73, figures 7-18 through 7-21, and table 7-5.

7-87. Cleaning — Hydraulic Servo Cylinder Assembly (Collective Control). (Paragraph 7-74).

7-88. Repair — Hydraulic Servo Cylinder Assembly (Collective Control) (AVIM). For repairs or replacement to components of collective hydraulic cylinder assembly (paragraph 7-75).

7-89. Assembly — Hydraulic Servo Cylinder Assembly (Collective Control).

NOTE

Assembly procedures for collective hydraulic cylinder assembly are same as cyclic control hydraulic cylinder assembly (paragraph 7-76), except for maintenance tasks outlined in the following steps.

a. Assembly of servo cylinder assembly P/N 205-076-056-105 requires the modification of tube assembly P/N 204-076-267-5. This modification permits proper clearance after installation between servo and surrounding airframe. Modify tube (Item 5, figure 7-14) as follows:

(1) Vibro etch the letter “A” as shown in figure 7-23.1 next to the present slots in hex threaded end of tube.

(2) Machine two additional slots as shown in figure 7-23.1. Vibro etch the letter “B” next to these new slots.

(3) Cool machined surface with Epoxy Polyamide Primer and finish with Black Polyurethane Paint.

b. Tube assemblies (204-076-267-5) are procured with both slots “A” and “B”, however tube assemblies procured before November 1987 have only one set of slots and will require the above modifications.

CAUTION

When assembling servo cylinder assemblies care should be taken that correct slot is used in tube assembly depending on which servo cylinder is being installed.

c. When assembling servo cylinder assembly per para. 7-76 d. and e. the following is applicable to collective installation:

(1) If P/N 205-076-099-5 servo cylinder is used align slot in piston rod with slot “A” in tube assembly when final adjustment is made.

(2) If P/N 205-076-056-107 servo cylinder is used align slot in piston rod with “B” in tube assembly when final adjustment is made.

This is a mandatory inspection point.

d. Discard 45° fittings (37, figure 7-11) provided and replace with straight fittings (18, figure 7-11). Port A should have plug installed. Ports B and C should have hydraulic lines installed. (Figure 7-23.2).

e. Install irreversible valve to servo (not applicable for P/N 205-056-105) (Paragraph 7-98).

*TORQUE NUT TO 25 INCH POUNDS MAX.
BOLT MUST TURN FREELY

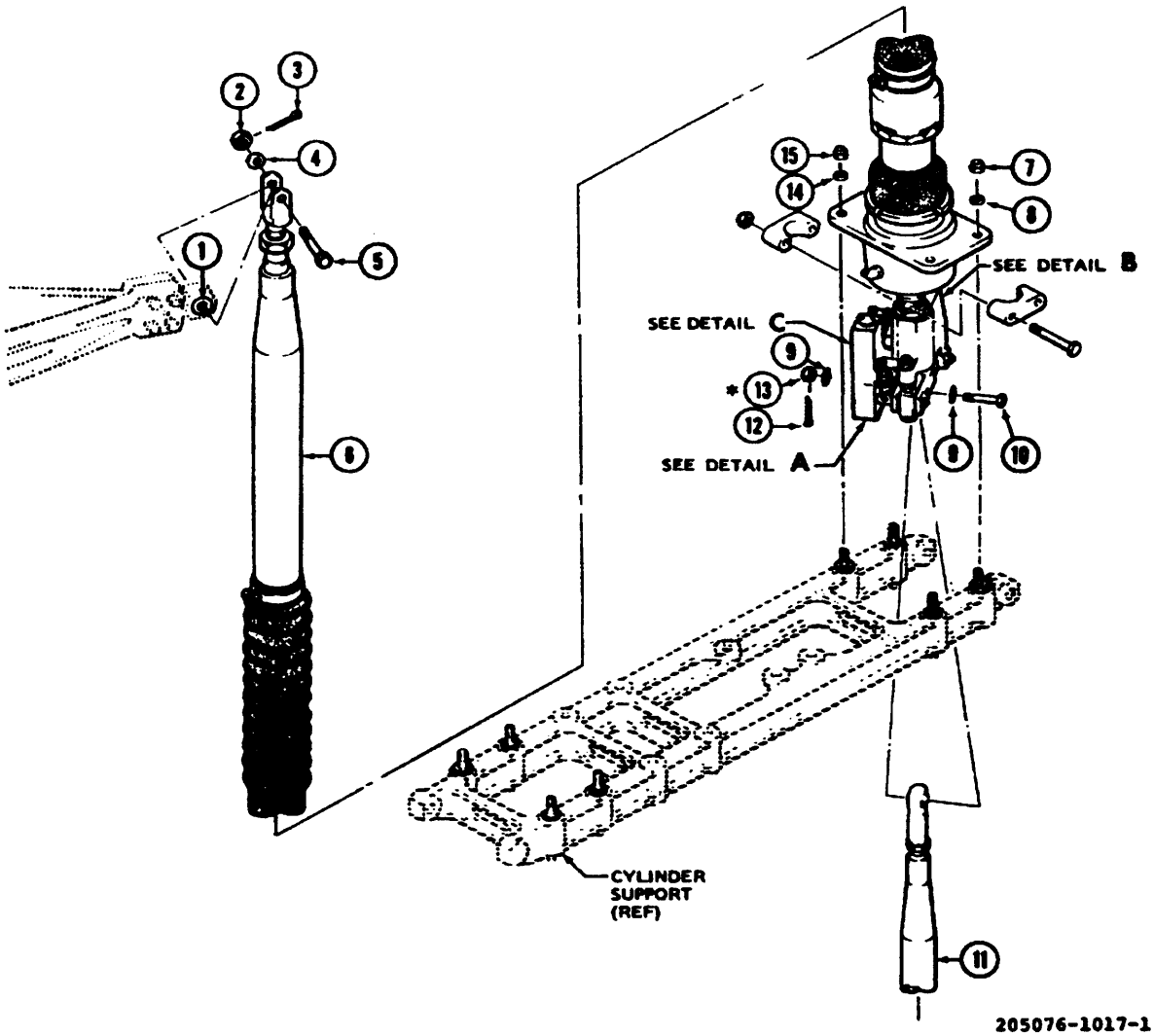

1. Trunnion bearing
2. Nut
3. Cotter pin
4. Washer
5. Bolt
6. Cylinder assembly
7. Nut
8. Washer
9. Washers
10. Bolt
11. Tube assembly
12. Cotter pin
13. Nut
14. Washer
15. Nut

Figure 7-23. Hydraulic Servo Cylinder Assembly (Collective Control) — Removal and Installation (Sheet 1 of 2)

ALL DATA ON PAGES 7-75 THRU 7-77 INCLUDING FIGURES 7-24 THRU 7-26 AND TABLE 7-6 ARE DELETED.

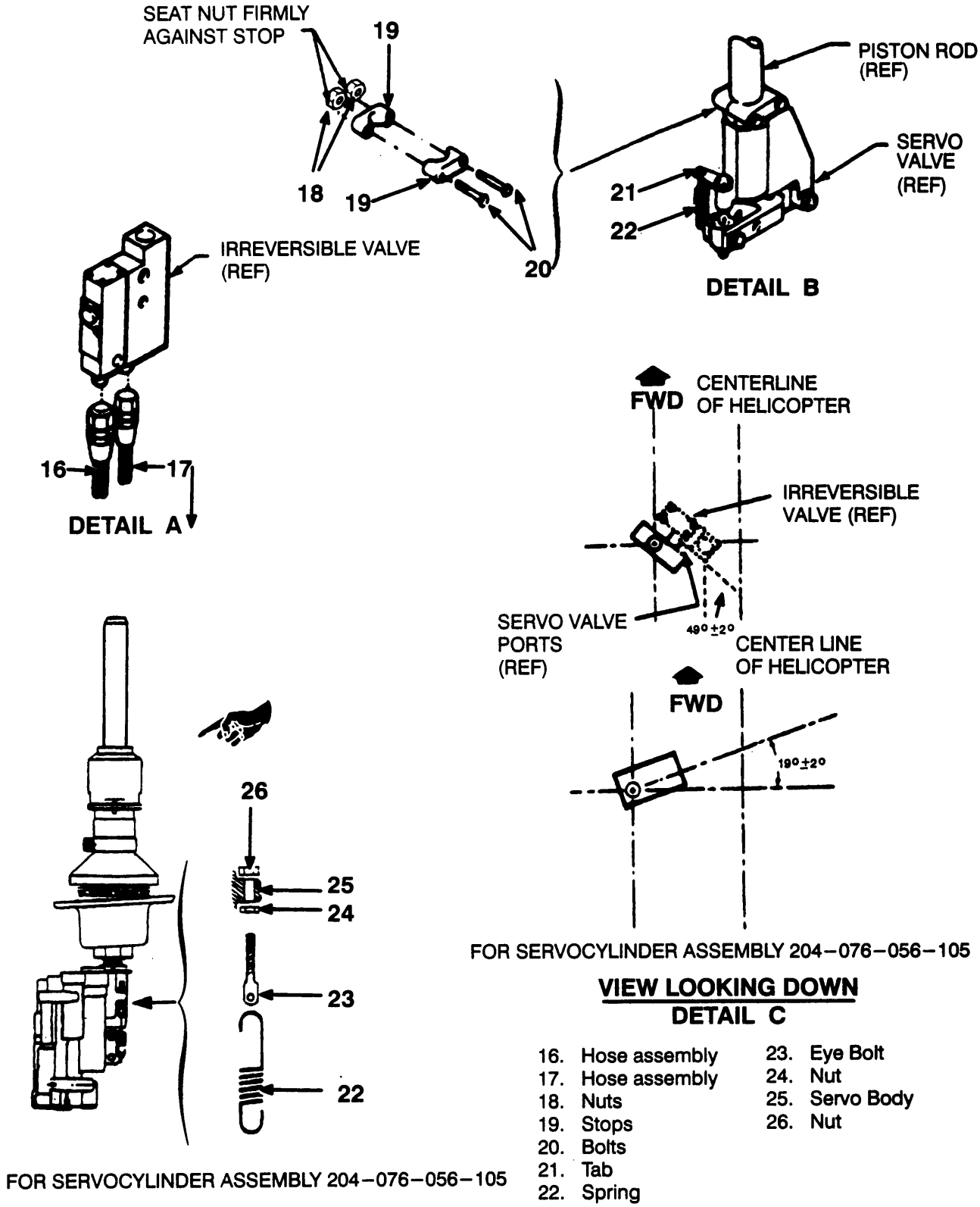

16. Hose assembly
17. Hose assembly
18. Nuts
19. Stops
20. Bolts
21. Tab
22. Spring
23. Eye Bolt
24. Nut
25. Servo Body
26. Nut

Figure 7-23. Hydraulic Servo Cylinder Assembly (Collective Control) Removal and Installation (Sheet 2 of 2).

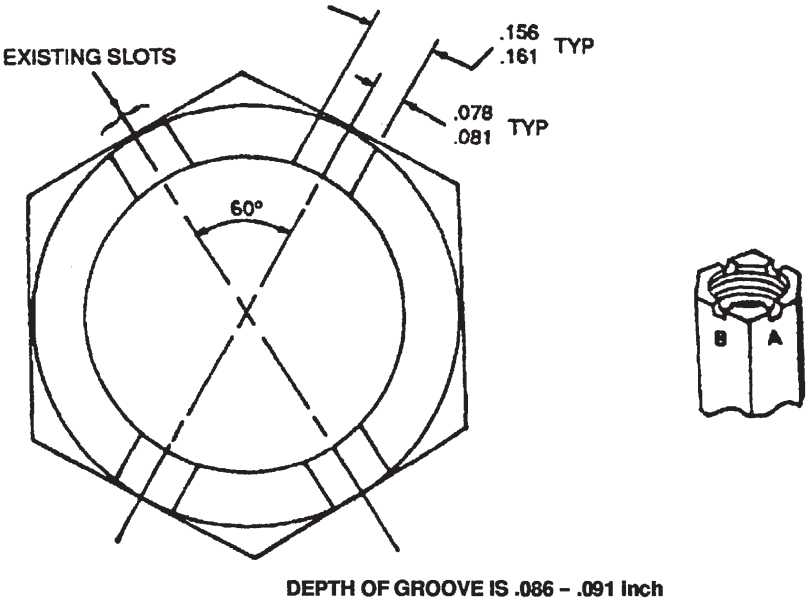

Figure 7-23.1. Additional Slots in Tube Assembly

NOTES:
1. General position of serve using slot "B" in Figure 7-23.1
2. Serve should clear adjacent structure for its full travel with hydraulics on.
3. Ensure part "A" has a plug installed. Part "B" and "C" have hydraulic lines installed.

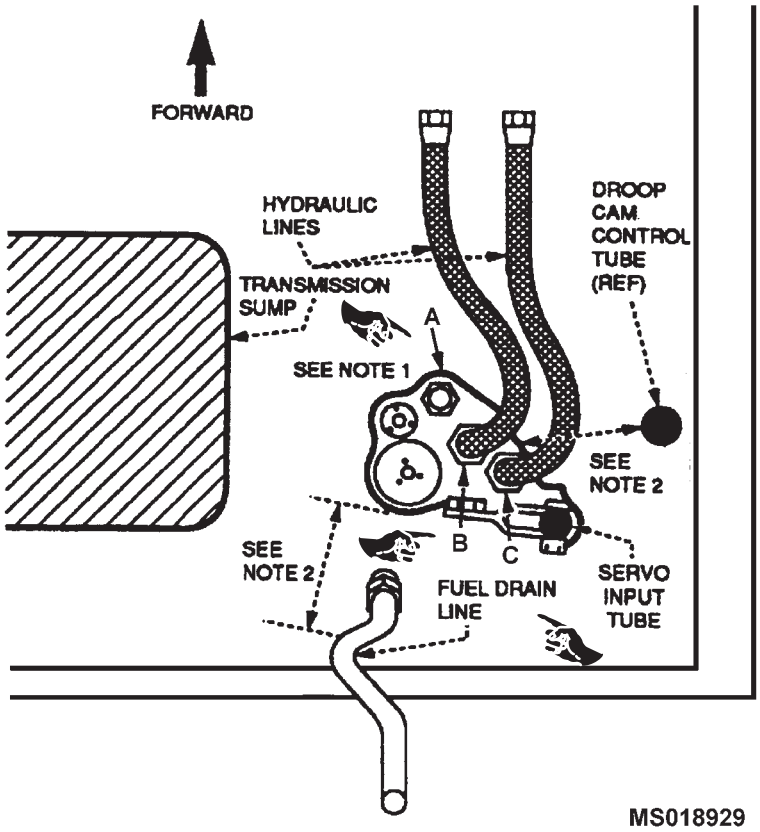

Figure 7-23.2. Position of servo, P/N 205-076-056-105, in collective position, looking up into hell hole

f. With piston rod (8, figure 7-14) in full up position, adjust boot assembly (33) **14.5** inches as shown in detail **B**.

g. Adjust and position clevis (1) **2.53** inches from center of hole in clevis to top of tube assembly (5) as shown in figure 7-12. Torque nut (3, figure 7-14) **480 to 600** inch-pounds and secure with lockwire (C155). Check dimension A measurement of collective hydraulic cylinder assembly as shown in figure 7-12.

CAUTION

Stops (19, figure 7-23) must be against nut.

h. Install bolts (20, figure 7-23), stops (19) and nuts (18) to piston rod and against nut.

i. Install spring (22).

7-90. Lubrication - Hydraulic Servo Cylinder Assembly (Collective Control). Apply grease to collective hydraulic cylinder assembly (6, figure 7-23) in accordance with figure 1-6. P/N 205-076-099 and 205-076-056 do not require lubrication.

7-91. Installation - Hydraulic Servo Cylinder Assembly (Collective Control). Install collective hydraulic cylinder assembly (6, figure 7-23) in accordance with the following procedures.

NOTE

Servo units are preserved with MIL-H-6083. Assure all preservative hydraulic oil is flushed from the unit with MIL-H-83282 prior to installation. Reference para 7-78a.

a. Position servo valve as shown in detail **C**, figure 7-23 and lower collective hydraulic assembly (6) onto studs of cylinder support.

NOTE

Figure 7-23.2 shows collective hydraulic cylinder assembly, P/N 205-076-056-105, in proper position and clearances with surrounding structure.

b. Install washers (8 and 14) and nuts (7 and 15) on studs of cylinder support. Using standard torque, tighten nuts evenly. Paint slippage marks.

NOTE

Protective dust covers in parts of servo valve will have to be removed prior to hookup of clevis to trunnion bearing (1, figure 7-23) for release of cylinder pressure while moving piston rod up or down.

c. Check position of clevis of servo valve (figure 7-22) and connect clevis of hydraulic cylinder assembly (6, figure 7-23) to trunnion bearing (1) and install bolt (5), washer (4) and nut (2), torque nut (2) (fig 5-5). Torque nut (2) (figure 7-23) to **100 TO 140** inch-pounds. Secure nut (2) with cotter pin (3).

WARNING

Make sure bolt (10) can be rotated by hand after installation of washers (9), self-locking castellated nut (13), and cotter pin (3).

NOTE

Add washers (9) as required to achieve 1/32 inch or less sideplay between bolthead (10) and hydraulic lever.

d. Position bearing of tube assembly (11) into lever of servo valve and install bolt (10), washers (9) and nut (13). Torque nut (13) to a maximum of 25 inch-pounds, bolt (10) must turn freely. Secure nut (13) with cotter pin (12).

e. Install irreversible valve to servo P/N 205-076-099-5. (Not applicable to P/N 205-076-056-105.)

f. Remove protective covers from hose assemblies (16 and 17, figure 7-23).

g. Install hose assemblies (16 and 17) to fittings located on bottom of either irreversible valve or servo cylinder (P/N 205-076-056).

h. Install droop compensator jackshaft and bracket on cylinder support (paragraph 4-132).

i. Service and bleed hydraulic system (paragraph 7-6).

j. Install left access doors (23 and 24, figure 2-18) and soundproofing blanket to pylon island in cabin area

NOTE

Prior to adjustment of balance spring, ensure that collective system is inspected In accordance with Chapter 11 of TM 55-1520-210-23-2.

7-92. Operational Check - Hydraulic Servo Cylinder Assembly (Collective Control). Perform operational check of hydraulic system (paragraph 7-3). With hydraulic test stand attached to hydraulic system, move collective stick up and down and check hydraulic cylinder for leaks (table 7-1). Ensure that all parts of the Servo Cylinder Assembly do not foul cabin structure. If fouling does occur, check position of servo cylinder as shown in detail C, figure 7-23. During operational flight, check collective stick for creeping up or down. Adjust spring on control cylinder servo valve if collective stick is creeping (paragraph 7-82). Adjust servo cylinder 204-076-056-109 balance spring by loosening nut (24) and turning nut (26). Tighten nut (24) after adjustment.

ALL DATA ON PAGES 7-75 THROUGH 7-76 INCLUDING FIGURES 7-24 THROUGH 7-26 AND TABLE 7-26 ARE DELETED.

7-85. Disassembly — Hydraulic Servo Cylinder Assembly (Collective Control) (AVIM).

NOTE

Disassembly procedures for collective hydraulic cylinder assembly are same as cyclic control hydraulic cylinder assembly, except for maintenance tasks outlined in the following steps.

a. Remove nuts (18, figure 7-23) and bolts (20) from stops (19).

b. Remove stops (19) from piston rod of collective hydraulic cyclinder assembly (6).

b.1 Remove spring (22).

c. Disassemble hydraulic cylinder assembly (paragraph 7-72).

7-86. Inspection — Hydraulic Servo Cylinder Assembly (Collective Control) (AVIM). Inspect collective hydraulic cylinder assembly in accordance with inspection limits outlined in paragraphs 7-70 and 7-73, figures 7-18 through 7-21, and table 7-5.

7-87. Cleaning — Hydraulic Servo Cylinder Assembly (Collective Control). (Paragraph 7-74).

7-88. Repair — Hydraulic Servo Cylinder Assembly (Collective Control) (AVIM). For repairs or replacement to components of collective hydraulic cylinder assembly (paragraph 7-75).

7-89. Assembly — Hydraulic Servo Cylinder Assembly (Collective Control).

NOTE

Assembly procedures for collective hydraulic cylinder assembly are same as cyclic control hydraulic cylinder assembly (paragraph 7-76) except for maintenance tasks outlined in the following steps.

a. With piston rod (8, figure 7-14) in full up position, adjust boot assembly (33) **14.5** inches as shown in detail **B.**

b. Adjust and position clevis (1) **2.53** inches from center of hole in clevis to top of tube assembly (5) as shown in figure 7-12. Torque nut (3, figure 7-14) **480 TO 600** inch-pounds and secure with lockwire (C155). Check dimension A measurement of collective hydraulic cylinder assembly as shown in figure 7-12.

CAUTION

Stops (19, figure 7-23) must be against nut.

c. Install bolts (20, figure 7-23), stops (19) and nuts (18) to piston rod and against nut.

d. Install spring (22).

7-90. Lubrication — Hydraulic Servo Cylinder Assembly (Collective Control). Apply grease to collective hydraulic cylinder assembly (6, figure 7-23) in accordance with figure 1-6. (P/N 205-076-099 requires no lubrication).

7-91. Installation — Hydraulic Servo Cylinder Assembly (Collective Control). Install collective hydraulic cylinder assembly (6, figure 7-23) in accordance with the following procedures.

a. Position servo valve as shown in detail C, figure 7-23 and lower collective hydraulic assembly (6) onto studs of cylinder support.

b. Install washers (8 and 14) and nuts (7 and 15) on studs of cylinder support. Using standard torque, tighten nuts evenly. Paint slippage marks.

NOTE

Protective dust covers in parts of servo valve will have to be removed prior to hookup of clevis to trunnion bearing (1, figure 7-23) for release of cylinder pressure while moving piston rod up or down.

c. Check position of clevis to servo valve (figure 7-22) and connect clevis of hydraulic cylinder assembly (6, figure 7-23) to trunnion bearing (1) and install bolt (5), washer (4) and nut (2). Secure nut (2) with cotter pin (3).

WARNING

Make sure bolt (10) can be rotated by hand after installation of washers (9), self-locking castellated nut (13), and cotter pin (3).

NOTE

Add washers (9) as required to achieve 1/32 inch or less sideplay between bolthead (10) and hydraulic lever.

d. Position bearing of tube assembly (11) into lever of servo valve and install bolt (10), washers (9) and nut (13). Torque nut (13) to a maximum of 25 inch-pounds, bolt (10) must turn freely. Secure nut (13) with cotter pin (12).

e. Install irreversible valve to servo valve (paragraph 7-106).

f. Remove protective covers from hose assemblies (16 and 17, figure 7-23).

g. Install hose assemblies (16 and 17) to fittings located on bottom of irreversible valve.

h. Install droop compensator jackshaft and bracket on cylinder support (paragraph 4-132).

i. Service and bleed hydraulic system (paragraph 7-6).

j. Install left access doors (23 and 24, figure 2-18) and soundproofing blanket to pylon island in cabin area.

7-92. Operational Check — Hydraulic Servo Cylinder Assembly (Collective Control). Perform operational check of hydraulic system (paragraph 7-3). With hydraulic test stand attached to hydraulic system, move collective stick up and down and check hydraulic cylinder for leaks (table 7-1). Ensure that irreversible valve does not foul cabin structure. If fouling does occur, check position of irreversible valve as shown in detail C, figure 7-23. During operational flight, check collective stick for creeping up or down. Adjust spring on control cylinder servo valve if collective stick is creeping (paragraph 7-82).

All data on pages 7-74 thru 7-78 including Figures 7-24 thru 7-26 and Table 7-6 are deleted.

Paragraphs 7-92.1 through 7-99 Deleted.

7-100. ARMAMENT COUPLINGS.

7-101. Description - Armament Couplings. External armament couplings (12 and 17, figure 7-27), located on left and right side of helicopter are provided for attaching external hydraulically operated armament system supports. The armament couplings also allow for quick disconnect of armament systems supports.

7-102. Removal - Armament Couplings.

NOTE

Removal procedures are typical for left or right armament couplings.

a. Armament Coupling (Pressure). Remove armament coupling (17, figure 7-27) from pressure side of hydraulic system as follows:

(1) Remove hydraulic access door (81, figure 2-18).

(2) Remove access door (47 or 58).

(3) Place rags or shop towels under fitting (1, figure 7-27) to catch fluid seepage. Disconnect tube assembly (22) from fitting (1).

(4) Break torque on nut (2) and remove fitting (1) from coupling half (17).

(5) Remove preformed packing (4), ring (3) and nut (2) from fitting (1).

(6) Remove dust cap (19) from coupling half (17).

(7) Remove four nuts (21), four washers (20) and four screws (15) attaching flange (16) to cabin structure. Remove flange (16) and coupling (17).

b. Armament Coupling (Return). Remove armament coupling (12, figure 7-27) from return side of hydraulic system as follows:

(1) Place rags or shop towels under fitting (5) to catch fluid seepage and disconnect tube assembly (9) from fitting.

(2) Break torque on nut (6) and remove fitting (5) from coupling half (12).

(3) Remove packing (8), ring (7) and nut (6) from fitting (5).

(4) Remove dust cap (18) from coupling half (12).

(5) Remove four nuts (10), four washers (11) and four screws (14) attaching flange (13) to cabin structure and remove flange (13) and coupling half (12).

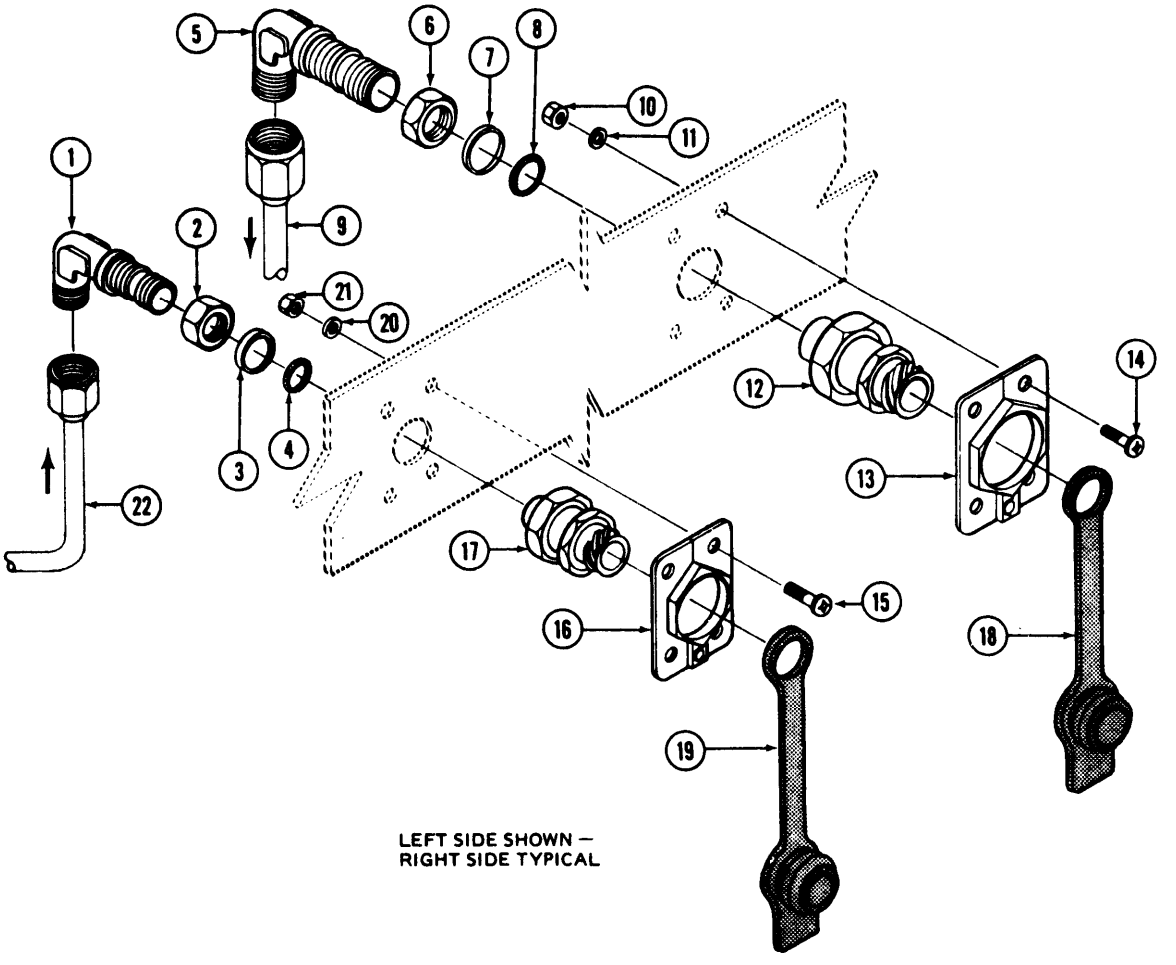

1. Fitting
2. Nut
3. Ring
4. Preformed packing
5. Fitting
6. Nut
7. Ring
8. Preformed packing
9. Tube assembly
10. Nut
11. Washer
12. Coupling half
13. Flange
14. Screw
15. Screw
16. Flange
17. Coupling half
18. Dust cap
19. Dust cap
20. Washer
21. Nut
22. Tube assembly

Figure 7-27. Armament Couplings, Hydraulic — Removal and Installation

7-103. Inspection — Armament Couplings.

a. Inspect coupling halves (12 and 17, figure 7-27) for corrosion. Minor corrosion is allowed only to external surface, provided damage area is polished (by sanding) and treated (paragraph 11-72.6, step b). No corrosion damage is allowed to fluted, or internal areas, of coupling halves.

b. Inspect dust caps (18 and 19) for deterioration and tears.

c. Inspect flanges (13 and 16) for corrosion. Minor corrosion is allowed provided corroded area is removed by polishing (sanding).

d. Inspect coupling halves (12 and 17) and attaching components for security.

e. Inspect coupling halves (12 and 17) for leaks.

f. Inspect all parts for thread damage.

g. Inspect coupling halves (12 and 17) for cracks. No cracks are allowed.

h. Inspect tube assemblies (9 and 22) in accordance with paragraph 7-108.

7-104. Repair — Armament Couplings.

a. Internal corrosion damage to coupling halves (12 and 17) requires replacement of part.

b. Any damaged part that does not warrant time expended for repairs, requires replacement of part.

c. Replace all packings and (backup) rings when removed.

d. Replace all parts that have thread damage or cracks.

e. Tighten any component that is loose.

f. Replace packing or damaged component when leaking fluid.

g. Replace dust caps (18 and 19) when torn or deteriorated.

7-105. Installation — Armament Couplings.

NOTE

Installation procedures are typical for left or right armament couplings.

a. Armament Coupling (Pressure). Install armament coupling half (17, figure 7-27) to pressure side of hydraulic system as follows:

(1) Install coupling half (17). Position flange (16) over coupling half (17) (with hinge down) and install screws (15), washers (20) and nuts (21).

(2) Install nut (2), ring (3) and packing (4) on fitting (1) and install fitting on coupling half (17) (with fitting end pointing down).

(3) Install tube assembly (22) on fitting (1). Torque tube assembly connector, refer to table 7-3.

b. Armament Coupling (Return). Install armament coupling half (12) to return side of hydraulic system as follows:

(1) Install coupling half (12) to cabin structure. Position flange (13) over coupling half (12) (with hinge down) and install screws (14), washers (11) and nuts (10).

(2) Install nut (6), ring (7) and packing (8) on fitting (5) and install fitting on coupling half (17) (with fitting end pointing down).

(3) Install tube assembly (9). Torque tube assembly connector, refer to table 1-5.

c. Bleed hydraulic system (paragraph 7-6).

d. Perform operational check of hydraulic system and check for leakage (paragraphs 7-3 and 7-4, and table 7-1).

e. Install left or right access doors (47 or 58 and 81, figure 2-18).

7-106. HOSES, TUBING, AND ATTACHING HARDWARE.

7-107. Description — Hoses, Tubing and Attaching Hardware. Throughout the hydraulic system are hoses, tubing and attaching hardware that interconnects check valves, relief valves, solenoid valves, irreversible valves, pump, reservoir and cyclic, collective, tail rotor cylinder assemblies. The tube assemblies are secured to cabin structure with clamps, spacers, washers and nuts.

7-108. Removal — Hoses, Tubing, and Attaching Hardware.

a. Remove hose assemblies, attaching clamps, and hardware from cabin structure as necessary to perform maintenance functions of hydraulic system.

b. Remove tube assemblies, attaching clamps, and hardware from cabin structure as necessary to perform maintenance functions to the hydraulic system.

7-109. Inspection — Hoses, Tubing and Attaching Hardware.

NOTE

For further inspection criteria and/or testing of hydraulic hose or tube assemblies, refer to TM 1-1500-204-23 series.

a. Inspect hose and tube assemblies for leaks, security, corrosion, cracks.

b. Inspect hose assemblies for deterioration or fraying.

c. Inspect hose and tube assemblies for deformation.

d. Inspect hose and tube assemblies for wear or binding.

7-110. Repair — Hoses, Tubing and Attaching Hardware.

a. For repairs to hose or tube assemblies, refer to TM 1-1500-204-23 series.

b. Replace hose or tube assemblies when cracked or deteriorated.

c. Replace clamps or hardware when damaged.

d. Tighten hose or tube assembly when leaking.

e. Tighten hardware attaching hose or tube assembly when loose.

f. Replace hose or tube assembly when component is deformed.

g. Ensure that all hose and tube assemblies do not foul, to prevent wear from chafing. Spiral wrap all hoses that are chafing with tape (C282).

h. Any damage to hoses, tubes and hardware that does not warrant time expended for repairs, necessitates replacement of part.

7-111. Installation — Hoses, Tubing and Attaching Hardware.

CAUTION

No clamps will be installed on flexible braided lines which move with the actuator, except where specified. Inspect the lines for chafing through full travel and reposition lines as necessary for clearance.

NOTE

Threads of tube and hose connectors and fittings will have hydraulic fluid (C130 or C131) applied to them prior to torquing. Do not exceed limits outlined in table 1-5 or torque threads when dry.

a. Install hose assemblies and attaching clamps and hardware to cabin structure as necessary to perform maintenance functions to the hydraulic system. reference: when component has been removed for repairs or damaged part is being replaced.

b. Install tube assemblies and attaching clamps and hardware to cabin structure as necessary to perform maintenance functions to the hydraulic system, reference: when component has been removed for repairs, or damaged part is being replaced.

SECTION II. PNEUMATIC SYSTEM

Not Applicable

CHAPTER 8

INSTRUMENT SYSTEMS

SECTION I. INSTRUMENT MAINTENANCE

8-1. INSTRUMENT MAINTENANCE.

8-2. Description-Instrument Maintenance. Instrument maintenance refers to general maintenance procedures which are applicable to all instruments mounted in the instrument panel.

8-3. Cleaning—Instrument Maintenance. Clean panel and instrument cover glasses with a suitable soft, lint-free cloth.

8-4. Inspection-Instrument Maintenance. a. Inspect for loose, cracked, or broken cover glasses or slippage.

b. Inspect for proper and secure mounting.

c. Inspect range markings and decals for completeness and legibility.

d. Inspect for proper operation.

e. Inspect for loose, missing or improperly installed hardware.

8-5. Removal-Instrument Maintenance. a. Ensure all electrical power is OFF.

b. Disconnect electrical leads or instrument piping from back of panel. Necessary access maybe through pedestal, through back of cabin mounting holes in panel after instrument is detached.

c. Protect ends of electrical leads, and cap open piping and openings on instrument.

NOTE

On helicopters, Serial No. 66-746 and subsequent; the MS28042 clamp will be used to mount certain round instruments. In order to remove this clamp it will be necessary to hold the clamp from the aft side while removing the screw from the front of the panel.

d. Remove mounting screws or loosen mounting clamp screw. Remove instrument.

8-6. Repair or Replacement—Instrument Maintenance. a. Replace missing or illegible range markings on cover glasses of instruments.

NOTE

When replacing instrument range markings (see TM 55-1520-210-10 for ranges except for Torque Pressure Indicator, see paragraph 8-6.d below) use a suitable lacquer, tape (C274), or prepared decals. Protect markings by applying a light coat of clear adhesive varnish or lacquer. Apply range markings accurately on cover glass.

b. Replace any required decals which are not clearly legible.

c. Replace any instrument if cover glass is loose, cracked or broken, or when found to be unserviceable.

d. Marking—Torque Pressure Indicator.

(1) Obtain torque figure from engine data plate.

(2) Use this figure to determine instrument marking as follows:

ENGINE DATA PLATE TORQUE FIGURE	INSTRUMENT MARKING POINT
58	47
59	48
60	49
61	50
62	51
63	51.5
64	52

(3) Place red line on indicator at this point. This is maximum indicated torque for this aircraft.

8-7. Installation—Instrument Maintenance.

CAUTION

On helicopters, Serial No. 66-746 and subsequent; the MS28042 clamp will be used to

mount certain round instruments. The installation technique required to ensure instrument security is that the clamp must be held in place from the aft side while tightened by a screw visible on the front side of the panel. A gap between the head of the screw and the face of the instrument panel may exist. Do not attempt to overtorque the screw to eliminate the clearance since the scissors mechanism of the clamp will be damaged.

NOTE

When installing AIMS altimeter ensure that the space is installed with thickest section at the bottom to prevent chafing.

a. Position instrument in panel. Install mounting screws or tighten screw of mounting clamp.

CAUTION

When connecting electrical plugs to dual tachometer indicator, ensure that plugs are connected to correct receptacle.

NOTE

Rotate engine, transmission pressure and temperature gages so that 9 o'clock is normal operating range.

b. Remove protective caps or covers as necessary. Connect electrical leads and instrument piping.

CAUTION

Failure to perform required instrument/indicator functional tests specified in this chapter can result in operation limits being exceeded with a false indication of operating within allowable limits.

c. Check instrument operation and perform functional test if specified in this chapter for the instrument installed.

8-8. INSTRUMENT PREMAINTENANCE REQUIREMENTS.

8-9. Description—Instrument Premaintenance Requirements. Throughout this chapter, unless otherwise specified, instrument maintenance, testing, and troubleshooting procedures will utilize only tools and equipment contained in Electronic Equipment Tool Kit, TK100/G and multimeter (AN/PSM-6A, or equivalent.)

SECTION II. ENGINE INSTRUMENTS

8-10. ENGINE INSTRUMENTS.

8-11. Description-Engine Instruments. Engine instruments include the tachometer, engine oil pressure, engine oil temperature, exhaust gas temperature, fuel pressure, and torque pressure indicating systems.

8-12. TACHOMETER INDICATING SYSTEMS.

8-13. Description-Tachometer Indicating Systems. The tachometer indicating systems are self-generating rotary type systems consisting of the dual tachometer, rotor tachometer generator, and power turbine tachometer generator as one system; and gas producer tachometer and gas producer tachometer generator as the other system.

8-14. DUAL TACHOMETER.

8-15. Description—Dual Tachometer. The dual tachometer indicates both main rotor rpm and engine output shaft rpm. Each tachometer has a synchronous motor connected electrically to separate tachometer generator. The system operates independently of helicopter electrical power systems. The rotor rpm pointer indicates on the inner scale of instrument, and the engine rpm pointer indicates on the outer scale. The pointers will be aligned when engine and rotor speeds are synchronized in normal operation.

8-16. Cleaning – Dual Tachometer. Refer to paragraph 8-3 for cleaning procedure.

8-17. Inspection — Dual Tachometer. Refer to paragraph 8-4 for inspection procedures.

8-18. Functional Test – Dual Tachometer (AVIM) a. Disconnect plug (P35) from rotor tachometer generator .Connect plug to the MASTER GENERATOR output plug on tachometer tester (T-90). Energize test stand and set controls according to the instructions on the cover of the tester.

b. Check that the rotor tachometer portion of the indicator indicates within tolerance of the various check points in the following:

TEST POINTS (RPM)	INDICATOR (RPM)	TOLERANCE
o	o	±3
531	40	±4
1063	80	±4
1992	150	±4
2532	190	±4
3055	230	±4
3320	250	±4
3580	270	±3
3851	290	±2
3984	300	±2
4117	310	±2
4250	320	±2
4383	330	±3
4649	350	±3

c. Disconnect plug (P35) from the tachometer tester (T90) and reconnect it to the rotor tachometer generator. Check that connector is properly mated and secure.

d. Disconnect plug (P86) from the power turbine tachometer generator. Connect plug to the MASTER GENERATOR output plug on tachometer tester (T90). Energize test stand and set controls according to the tester instructions on the cover of the tester.

e. Check that the power turbine portion of the indicator indicates within tolerance of the various check points in the following:

TEST POINTS (RPM)	INDICATOR (RPM)	TOLERANCE
0	0	± 50
511	800	± 70
956	1500	± 70
1980	3100	± 70
2491	3900	± 70
2938	4600	± 70
3257	5100	± 50
3576	5600	± 50
3832	6000	± 30
3954	6200	± 30
4023	6300	± 20
4151	6500	± 30
4342	6800	± 40
4534	7100	± 60

f. Disconnect plug (P86) from the test stand and reconnect it to the power turbine tachometer generator. Check that connector is properly mated and secure.

8-19. Troubleshooting — Dual Tachometer. Use table 8-1 and perform necessary checks to isolate trouble. Broken or shorted wiring is always a probable cause of malfunction or failure and has not been included. (figure F-11.)

NOTE

Before using this table, be sure all normal operational checks have been performed.

Table 8-1. Troubleshooting Dual Tachometer

CONDITION

TEST OR INSPECTION

CORRECTIVE ACTION

1. Tachometer has excessive scale error.

STEP 1. Determine if indicator has weak magnet assembly.

Replace indicator if defective (paragraph 8-1).

2. Tachometer indication only half of actual speed.

STEP 1. Determine if electrical connectors are connected to correct receptacle on indicator.

Reconnect electrical connectors if reversed at indicator.

3. No reading on tachometer indicator.

STEP 1. Check for poor connection at indicator or generator.

Clean or tighten connections (paragraph 8-24).

Table 8-1. Troubleshooting Dual Tachometer (Cont)

CONDITION	TEST OR INSPECTION	CORRECTIVE ACTION
	STEP 2. Determine if internal circuit is defective in indicator or generator.	**Replace defective indicator and/or generator (paragraphs 8-1, 8-22, and 8-31).**
	STEP 3. Check system wiring.	**Repair defective wiring.**
4. High or low reading on indicator either constant or intermittent.	STEP 1. Determine if indicator resistance is out of adjustment.	**Replace indicator if defective (paragraph 8-1).**

8-20. Removal/Installation—Dual Tachometer. Refer to paragraphs 8-5 and 8-7 for removal and installation procedures.

8-21. Repair or Replacement—Dual Tachometer. Refer to paragraph 8-6 for repair or replacement criteria.

8-22. POWER TURBINE TACHOMETER GENERATOR.

8-23. Description—Power Turbine Tachometer Generator. The power turbine tachometer generator is mounted on the governor and tachometer drive gearbox on the left upper side of the engine, and is connected to the dual tachometer indicators on the instrument panels.

8-24. Cleaning—Power Turbine Tachometer Generator.

a. Remove moisture and loose dirt with a clean, soft cloth.

WARNING

Dry cleaning solvent is flammable and its fumes are toxic. Provide adequate ventilation. Do not use near a flame.

b. Remove grease, fungus, and dirt with a clean, lint-free cloth dampened with solvent (C261).

c. Remove dirt from electrical connectors with a bristle brush (C52).

8-25. Inspection—Power Turbine Tachometer Generator.

a. Inspect tachometer generator case for cracks, excessive wear, or any visible damage.

b. Check connector for damaged or bent pins and cracked inserts.

c. Check that rotor turns freely and there is no visible indication of excessive wear to bearings.

8-26. Troubleshooting—Power Turbine Tachometer Generator.

a. Remove cowling from left side of engine.

b. Disconnect electrical receptacle, remove mounting nuts and washers and lift tachometer generator from engine.

8-27. Removal—Power Turbine Tachometer Generator.

a. Open cowling on left side of engine.

b. Disconnect electrical receptable, remove mounting nuts and washers and lift tachometer generator from engine.

8-28. Repair or Replacement—Power Turbine Tachometer Generator.

a. Replace tachometer generator if case is cracked or damaged.

b. Replace tachometer generator if rotor does not turn freely or for visible indication of excessive wear to bearings or drive mechanism.

NOTE

Replacement of power turbine tachometer generator will require testing the rpm limit warning system (paragraph 9-183).

c. Repair damaged connectors.

8-29. Testing-Power Turbine Tachometer Generator. a. Remove tachometer generator from helicopter and mount on tachometer tester (T-91). Connect generator to the TEST GENERATOR INPUT Operate tester according to instructions on cover and check voltage outputs of the tachometer generator. With a 40 ohm "Y" connected resistance and a shaft speed of 4200 rpm, check voltage output across each phase of the generator (A-B, A-C, and B-C). The three voltage outputs should be 21 ± 0.5 Vac.

b. Decrease generator speed to 1,000 rpm with a 20 ohm "Y" connected resistance.

c. Check the voltage output of the three phases. Voltage should not go below 3.5 Vac.

d. Disconnect tachometer generator and remove from the tachometer tester (T90).

e. Measure the resistance of each phase (A–B, A–C, and B–C). At 25° Celsius (77°F), the resistance should be between 15 and 50 ohms. Each phase should be within two (2) ohm of each other.

f. At completion of testing, install tachometer generator and connect electrical plug and check for proper mating and security.

8-30. Installation—Power Turbine Tachometer Generator.

NOTE

Coat tachometer generator shaft and pack mating square drives of shaft in accessory drive gearbox 2/3 full with lubricant (C161).

a. Position tachometer generator and gasket on studs and install nuts.

b. Connect electrical receptacle and install cowling.

8-31. ROTOR TACHOMETER GENERATOR

8-32. Description-Rotor Tachometer Generator. The rotor tachometer generator is located on the lower right side of the transmission. The generator is mounted on the hydraulic pump and tachometer drive quill assembly and is connected to the dual tachometer indicators on the instrument panels.

8-33. Cleaning—Rotor Tachometer Generator. Refer to paragraph 8-24 cleaning procedures are the same.

8-34. Inspection-Rotor Tachometer Generator. Refer to paragraph 8-25, inspection procedures are the same.

8-35. Troubleshooting—Rotor Tachometer Generator. Refer to paragraph 8-19 for troubleshooting procedures.

8-36. Removal-Rotor Tachometer Generator. a. Remove cowling from right side of transmission.

b. Disconnect electrical receptacle, remove mounting nuts and washers, and lift rotor tachometer generator from helicopter.

8-37. Repair or Replacement—Rotor Tachometer Generator. a. Replace tachometer generator if case is cracked or damaged.

b. Replace tachometer generator if rotor does not turn freely or if visible indication of excessive wear to bearings.

NOTE

Replacement of rotor tachometer generator will require testing the rpm limits warning system (paragraph 9-183).

8-38. Testing—Rotor Tachometer Generator. Refer to paragraph 8-29, procedures are the same.

8-39. Installation-Rotor Tachometer Generator. a. Apply a thin film of antiseize compound (C47) to tachometer generator square drives and to mating square drives in transmission.

b. Position tachometer generator and gasket on mounting studs and install washers and nuts.

c. Connect electrical receptacle and install cowling.

8-40. GAS PRODUCER TACHOMETER INDICATOR.

8-41. Description — Gas Producer Tachometer Indicator. The gas producer tachometer, located on the instrument panel, provides indication in percent rpm of the engine gas producer (first stage on N1 turbine and compressor) by connection to a synchronous generator, mounted on engine accessory drive section. The indicator and generator circuit are independent of helicopter electrical power system.

8-42. Cleaning — Gas Producer Tachometer Indicator. Refer to paragraph 8-3 for cleaning procedure.

8-43. Inspection — Gas Producer Tachometer Indicator. Refer to paragraph 8-4 for inspection procedure.

8-44. Troubleshooting — Gas Producer Tachometer Indicator. Refer to paragraph 8-19; procedures are the same.

8-45. Removal — Gas Producer Tachometer Indicator. Refer to paragraph 8-5 for removal procedure.

8-46. Repair or Replacement — Gas Producer Tachometer Indicator. Refer to paragraph 8-6 for repair or replacement criteria.

8-47. Bench Test — Gas Producer Tachometer Indicator (AVIM). a. Disconnect plug (P87) from gas producer tachometer generator. Connect plug to the MASTER GENERATOR output plug on the tachometer tester (T90). Energize the test stand and set controls according to the instructions on the cover of the tester.

b. Check that the gas producer tachometer indicator indicates within tolerance of the various check points in the following:

TEST POINTS (RPM)	INDICATOR (RPM)	TOLERANCE
5%	5%	±1.00
20%	20%	± 1.25
70%	70%	± 1.25
100%	100%	±1.00

c. Disconnect plug (P87) from tachometer tester (T90) and reconnect it to gas producer tachometer generator. Check that connector is properly mated and secure.

8-48. Installation — Gas Producer Tachometer Indicator. a. Refer to paragraph 8-7 for installation procedures.

b. Perform N1 System accuracy check in accordance with TM 55-4920-401-13 & P.

8-49. GAS PRODUCER TACHOMETER GENERATOR.

8-50. Description — Gas Producer Tachometer Generator. The gas producer tachometer generator, located on the right side of the engine on the accessory drive gearbox, monitors the rpm of the gas producer turbine and transmits voltage signals to drive the gas producer tachometer indicator.

8-51. Cleaning — Gas Producer Tachometer Generator. Refer to paragraph 8-24; procedures are the same.

8-52. Inspection — Gas Producer Tachometer Generator. Refer to paragraph 8-25; procedures are the same.

8-53. Troubleshooting — Gas Producer Tachometer Generator. Refer to paragraph 8-19 for troubleshooting.

8-54. Removal – Gas Producer Tachometer Generator. Refer to paragraph 8-27; procedures are the same.

8-55. Repair or Replacement — Gas Producer Tachometer Generator. Refer to paragraph 8-28; procedures are the same.

8-56. Testing – Gas Producer Tachometer Generator. Refer to paragraph 8-29; procedures are the same.

8-57. Installation – Gas Producer Tachometer Generator. a. Refer to paragraph 8-30; procedures are the same.

b. Perform N1 System accuracy check in accordance with TM 55-4920-401-13 & P.

8-58. ENGINE OIL PRESSURE INDICATING SYSTEM.

8-59. Description — Engine Oil Pressure Indicating System. The engine oil pressure indicating system includes the engine oil pressure indicator and the engine oil pressure transmitter. The system is powered from the 28 vac bus, and is protected by a 1 ampere engine oil pressure indicating circuit breaker.

8-60. ENGINE OIL PRESSURE INDICATOR.

8-61. Description — Engine Oil Pressure Indicator. The engine oil pressure indicator, located on the instrument panel, indicates engine oil pressure in psi by means of the engine oil pressure transmitter.

8-62. **Cleaning – Engine Oil Pressure Indicator.** Refer to paragraph 8-3 for cleaning procedures.

8-63. Inspection — Engine Oil Pressure Indicator. Refer to paragraph 8-4 for inspection procedure.

8-64. Functional Test – engine Oil Pressure Indicator. a. Disconnect pressure line from the engine oil pressure transmitter.

b. Connect variable pressure (0 -150 psi) tester (T10.1) to input line on engine oil pressure transmitter.

c. Energize main or standby inverter. Close 28V XFMR circuit breaker and ENG OIL PRESS circuit breaker.

d. Apply pressure to the transmitter input port while monitoring the engine oil pressure indicator. Helicopters using T53-L-13 series engines indicated pressure shall be 100 psi when applied pressure is 100 ± 5 psi.

8-65. Troubleshooting – Engine Oil Pressure Indicator. Use table 8-2 and perform checks as necessary to isolate trouble. (See figure F-12.)

NOTE

Before using this table, be sure all normal operational checks have been performed.

Table 8-2. Troubleshooting Engine Oil Pressure Indicator

CONDITION	TEST OR INSPECTION	CORRECTIVE ACTION
1. Pressure indicator is reading low.	STEP 1. Check for kinked or obstructed pressure line.	Replace or clean obstructed line (paragraph 8-1).
2. Pressure indicator is inaccurate or sticking.	STEP 1. Determine if indicator is defective.	Replace indicator if defective (paragraph 8-1).
3. Pressure indicator has sluggish action.	STEP 1. Check for sludge in pressure line.	Bleed pressure line.
4. Pressure indicator is inoperative.		

Table 8-2. Troubleshooting Engine Oil Pressure Indicator (Cont)

CONDITION	TEST OR INSPECTION	CORRECTIVE ACTION
	STEP 1. Determine if pressure indicator is defective.	**Replace indicator if defective (paragraph 8-1).**
	STEP 2. Perform continuity check of circuit between transmitter and indicator.	**Repair or replace electrical leads or wiring (paragraph 9-5).**
5. Pressure indicator shows fluctuating pressure.		
	STEP 1. Check for loose electrical connections and determine if instrument is clamped too tight.	**Tighten electrical connections or readjust clamp.**
	STEP 2. Ensure that correct restrictor (0.025 to 0.027 inch orifice) is installed in system.	**Install correct restrictor (paragraph 8-77).**
	STEP 3. Restrictor orifice blocked or clogged.	**Clean restrictor orifice.**

8-66. Removal — Engine Oil Pressure Indicator. Refer to paragraph 8-5 for removal procedure.

8-67. Repair or **Replacement — Engine Oil pressure Indicator.** Refer to paragraph 8-6 for repair or replacement criteria.

8-68. Installation — Engine Oil Pressure Indicator. Align engine oil pressure indicator so that 90 psi is at 9 o'clock for T53-L-13 engine. Refer to paragraph 8-7 for installation **procedure.**

8-69. ENGINE OIL PRESSURE TRANSMITTER.

8-70. Description — Engine Oil Pressure Transmitter. The engine oil pressure transmitter, located on top of the engine inlet section, monitors engine oil pressure and transmits voltage signals to the engine oil pressure indicator.

8-71. Cleaning – Engine Oil Pressure Transmitter. a. Remove moisture and loose dirt with a clean, soft cloth.

WARNING

Dry cleaning solvent is flammable and its fumes are toxic. provide adequate ventilation. Do not use near flame.

b. Remove oil, grease, fungus, and dirt with a clean, lint-free cloth dampened with dry cleaning solvent (C261).

c. Remove dirt from electrical connectors with a soft bristle brush (C52).

8-72. Inspection — Engine Oil Pressure Transmitter. a. Inspect pressure transmitter for cracks, secure and proper mounting, and proper operation.

b. Inspect oil line and fitting connection for leaks and proper installation.

c. Inspect electrical connector for damaged or bent pins and cracked inserts.

8-73. Functional Test – Engine Oil Pressure Transmitter.

NOTE

The pressure transmitter is functionally tested during testing of the pressure indicator using variable pressure tester, paragraph 8-64. The following electrical resistance check may be conducted on the pressure transmitter independently, from the pressure indicator.

a. Using multimeter (T3 or equivalent), check resistance between contacts of electrical receptacle on top of transmitter.

b. Resistance should be approximately 10 ohms across contacts A to C and B to C, and approximately 20 ohms across contacts A to B.

8-74. Troubleshooting — Engine Oil Pressure Transmitter. Refer to. paragraph 8-65 for troubleshooting.

8-76. Removal – Engine Oil Pressure Transmitter. a. Remove cowling from engine.

b. Disconnect electrical connector. Disconnect oil line from elbow. Place protective covers over connector and oil line. Remove elbow, nut and, packing from transmitter.

c. Remove transmitter mounting nut. Withdraw transmitter from support and install protective cover.

8-76. Repair or Replacement – Engine Oil Pressure Transmitter. a. Repair damaged electrical connectors.

b. Tighten loose oil line or fitting connection.

c. Replace defective or damaged oil line or fitting.

d. Replace pressure transmitter if cracked or damaged.

e. Reinstall improperly mounted pressure transmitter.

8-77. Installation — Engine Oil Pressure Transmitter.

CAUTION

Check that correct restrictor (0.025 TO 0.027 inch orifice) is installed at oil filter.

a. Position transmitter in support and install mounting nut. Remove protective cover from transmitter and install elbow, nut and new packing with elbow pointing up. Insure vented plug is installed in transmitter.

b. Remove protective covers and attach oil line and electrical connector to transmitter. Install cowling.

8-70. ENGINE OIL TEMPERATURE INDICATING SYSTEM.

8-79. Description — Engine Oil Temperature Indicating System. The engine oil temperature indicating system includes the engine oil temperature indicator and the engine oil temperature bulb. The system is powered from the 28 Vdc essential bus and is protected by a 5 ampere ENG & XMSN TEMP IND circuit breaker.

8-80. ENGINE OIL TEMPERATURE INDICATOR.

8-81. Description – Engine Oil Temperature Indicator. The engine oil temperature indicator, located on the instrument panel, indicates engine oil temperature in degrees Calsius by means of an electrical resistance type temperature bulb.

8-82. Cleaning - Engine Oil Temperature Indicator. Refer to paragraph 8-3 for cleaning procedures.

8-83. Inspection — Engine Oil Temperature Indicator. Refer to paragraph 8-4 for inspection procedure.

8-84. Functional Test - Engine Oil Temperature Indicator. a. Place BAT switch to ON. Close ENG & XMSN TEMP IND circuit breaker.

b. Check that temperature indcator indicate approximately ambient temperature.

8-85. Troubleshooting — Engine Oil Temperature Indicator. Use table 8-3 and perform checks as necessary to isolate trouble (figure F-13).

NOTE

Before using this table, be sure all normal operational checks have been performed.

Table 8-3. Troubleshooting Engine Oil Temperature Indicator.

CONDITION

TEST OR INSPECTION

CORRECTIVE ACTION.

1. Oil temperature indication off scale at low end, or low reading — constant or intermittent.

STEP 1. Determine if indicator is defective.

Replace indicator if defective (paragraph 8-1).

STEP 2. Perform continuity check from temperature bulb to indicator.

Repair or replace electrical leads or wiring (paragraph 9-5).

2. Oil Temperature indication off scale at high end, or high reading — either constant or intermittent.

STEP 1. Check for short circuit in temperature bulb

Replace temperature bulb if defective (paragraph 8-95).

STEP 2. Check for open circuit in temperature bulb or between temperature bulb and indicator.

Replace temperature bulb or repair electrical wiring (paragraph 8-95).

STEP 3. Check for defective indicator.

Replace indicator if defective (paragraph 8-1).

3. No indication on temperature indicator.

STEP 1. Ensure voltage is present on 28 Vdc bus and check for defective ENG & XMSN TEMP IND circuit breaker.

Replace circuit breaker if defective (paragraph 9-12).

STEP 2. Check for open electrical wire from circuit breaker to indicator.

Repair electrical wiring.

8-86. Removal – Engine Oil Temperature Indicator. Refer to paragraph 8-5 for removal procedure.

8-87. Repair or Replacement — Engine Oil Temperature Indicator. Refer to paragraph 8-6 for repair or replacement criteria.

8-88. Testing – Engine Oil Temperature Indicator. (AVIM) a. Disconnect electrical plug in back of oil temperature indicator. Remove indicator from instrument panel. Connect indicator to electric thermometer tester, field type (T91) using the appropriate adapter cable provided with the tester.

CAUTION

Always be certain that the indicator is connected before turning switch "7" to the "24" volt position.

b. Check zero setting of the voltmeter "1" and adjust if necessary. Turn switch "7" to the "24" volt position.

c. Adjust pointer of voltmeter "1" to coincide with the red line at 28.50 volts by operating rheostat "5.". Position switch "8" to the left and single position.

d. Set temperature selector switch "2" to temperature points in the "left inner scale" (90.38 ohms at zero degrees temperature).

e. Rotate switch "2" to required test points. Tap the indicator before taking a reading. The test points and tolerances are listed in the following:

TEST POINTS	INDICATOR READING	TOLERANCE
-70	-70° Celsius	± 4
-30	-30° Celsius	± 4
0	0° Celsius	± 2
+30	30° Celsius	± 2
+80	80° Celsius	± 2
+120	120° Celsius	± 3
+150	150° Celsius	± 4

f. Turn switch "7" to the "OFF' position and disconnect indicator from tester. Install indicator in instrument panel and check for security.

8-89. Installation — Engine Oil Temperature Indicator. Align engine oil temperature indicator so that 70°C is at 9 o'clock position. Refer to paragraph 8-7 for installation procedure.

8-90. ENGINE OIL TEMPERATURE BULB.

8-91. Description — Engine Oil Temperature Bulb. The engine oil temperature bulb, installed in the engine oil pump housing is a resistance type temperature bulb which monitors the engine oil temperature and transmits varying voltage signals to the engine oil temperature indicator.

8-92. Cleaning – Engine Oil Temperature Bulb. a. Remove moisture and loose dirt with a clean, soft cloth.

WARNING

Dry cleaning solvent is flammable and its fumes are toxic. Provide adequate ventilation. Do not use near a flame.

b. Remove oil, grease, fungus, and dirt with a clean, lint-free cloth dampened with dry cleaning solvent (C261).

c. Remove dirt from electrical connectors with a soft bristle brush (C62).

8-93. Inspection — Engine Oil Temperature Bulb. a. Inspect temperature bulb for cracks, leaks, security and proper mounting.

b. Inspect electrical connector for damaged or bent pins and cracked inserts.

8-94. Troubleshooting - Engine Oil Temperature Bulb. Refer to paragraph 8-85 for troubleshooting.

8-95. Removal – Engine Oil Temperature Bulb. a. Cut lockwire and disconnect electrical connector.

b. Remove lockwire and unscrew temperature bulb from oil manifold.

c. Remove gasket.

8-96. Repair or Replacement – Engine Oil Temperature Bulb. a. Repair damaged electrical connectors.

b. Replace damaged or worn gasket.

c. Replace temperature bulb if cracked or damaged.

8-97. Bench Test — Engine Oil Temperature Bulb (AVIM). **a.** Resistance Check.

(1) Remove oil temperature bulb to be checked and allow sufficient time to adjust to ambient temperature.

(2) With a Whetstone bridge, measure the resistance of the temperature bulb between pin A and B. Ambient temperature test points and tolerances are listed in the following :

AMBIENT TEMPERATURE TEST POINT DEGREES	RESISTANCE (OHMS)	TOLERANCE (OHMS)
-20° Celsius (-4°F)	83.77	± 0.4
-10° Celsius (14°F)	87.04	± 0.4
0° Celsius (32°F)	90.38	± 0.4
10° Celsius (50°F)	93.80	± 0.4
20° Celsius (68°F)	97.31	± 0.4
30° Celsius (86°F)	100.91	± 0.4
40° Celsius (104°F)	104.60	± 0.4

b. Insulation Leakage Test. With the temperature bulb subjected to a 100 volt potential between any electrical pin and the bulb housing, the minimum resistance shall be 5 megohms. Reinstall temperature bulb

8-98. Installation — Engine Oil Temperature Bulb. a. Coat threads and gasket with lubricating oil (C169) when installing gasket on temperature bulb.

b. Install temperature bulb and gasket in manifold.

c. Lockwire to adjacent bolt head on manifold.

d. Connect and lockwire electrical connector.

8-99. EXHAUST GAS TEMPERATURE INDICATING SYSTEM.

8-100. Description — Exhaust Gas Temperature Indicating System. The exhaust gas temperature indicating system includes the exhaust gas temperature indicator and the thermocouple lead spool resistor. The system is self-generating, operating on electrical potential from the engine thermocouple harness assembly.

8-101. EXHAUST GAS TEMPERATURE INDICATOR.

8-102. Description — Exhaust Gas Temperature Indicator. The exhaust gas temperature indicator, located on the instrument panel, indicates exhaust gas temperature in degrees Celsius. The indicator operates on electrical potential from the engine thermocouple harness, mounted in the aft section of the engine exhaust diffuser.

8-103. Cleaning – Exhaust Gas Temperature Indicator. Refer to paragraph 8-3 for cleaning procedure.

8-104. Inspection — Exhaust Gas Temperature Indicator. Refer to paragraph 8-4 for inspection procedure.

8-105. Functional Test — Exhaust Gas Temperature Indicator. a. Connect and operate the engine exhaust gas temperature tester (T3.1) in accordance with TM 55-4920-244-14.

(1) Determine EGT indicator accuracy and adjust or replace as required.

(2) Establish circuit insulation to ground, and confirm that thermocouple probes are operative.

(3) Perform EGT circuit resistance check, and adjust thermocouple lead spool resistor to obtain 8 ± 0.05 ohms (paragraph 8-117).

NOTE

Engine EGT tester and helicopter instrument must be at same ambient temperature for accurate check.

b. Perform functional check of EGT circuit.

(1) EGT system error must not exceed ± 10° Celsius at test temperature (600° Celsius).

(2) Troubleshoot as necessary, using exhaust gas temperature tester to isolate causes of error.

8-106. Troubleshooting — Exhaust Gas Temperature Indicator. Use table 8-4 and perform checks as necessary to isolate trouble (figure F-14.)

NOTE

Before using this table, be sure all normal operational checks have been performed.

Table 8-4. Troubleshooting Exhaust Gas Temperature Indicator

CONDITION	TEST OR INSPECTION	CORRECTIVE ACTION
1. EGT indicator reads high or low.	STEP 1. Perform functional test of EGT indicator (paragraph 8-105).	**Replace indicator if defective (paragraph 8-1). Adjust thermocouple lead spool resistor to obtain correct resistance. Replace thermocouple lead spool resistor if circuit resistance is less than 7.95 ohms (paragraph 8-117).**
2. EGT indicator fails to indicate.	STEP 1. Troubleshoot EGT wiring. (See figure F-14.)	**Replace defective wiring (paragraph 9-5).**
	STEP 2. Perform functional test of EGT indicator (paragraph 8-105).	**Replace indicator if defective (paragraph 8-1). Adjust thermocouple lead spool resistor to obtain correct resistance (paragraph 8-117).**

8-107. Removal — Exhaust Gas Temperature **Indicator.** Refer to paragraph 8-5 for removal procedure.

CAUTION

When removing exhaust gas temperature gage, place a short piece of wire across the terminal posts. This will ground the terminals and preclude violent needle movements and damage by static electricity. Instrument internal components are easily damaged, rendering the instrument out of calibration or inoperative. Do not replace washers on instrument terminal posts, as they are of special material. Replacing them with standard washers will cause a faulty EGT indication.

8-108. Repair or Replacement – Exhaust Gas Temperature Indicator. Refer to paragraph 8-6 for repair or replacement criteria.

8-109. Bench Test – Exhaust Gas Temperature Indicator (AVIM).

NOTE

Prior to bench test, the indicator shall be subjected to a constant room temperature for a period of not less than one hour.

a. Apply millivoltage to the indicator terminals for each test point as specified in table 8-5 for the prevailing ambient temperature. The millivoltage shall be applied to the indicator through a series external circuit resistance of 8 ± 0.05 ohms. The millivoltage applied shall be measured with a potential measuring instrument having a minimum accuracy of 0.2 percent and a minimum readability of 0.2 percent.

b. Tap the indicator slightly after each reading. The difference in reading after tapping shall be considered friction error. Refer to table 8-6 for scale error and friction error tolerances.

Table 8-6. Millivolts vs Temperature

AMBIENT TEMPERATURE	INDICATOR TEST POINT °Celsius MILLIVOLTS					
°Celsius	500	600	700	800	900	1,000
10	20.24	24.50	28.74	32.91	36.96	40.91
15	20.04	24.30	28.54	32.71	36.76	40.71
20	19.84	24.10	28.34	32.51	36.56	40.51
25	19.64	23.90	28.14	32.31	36.36	40.31
30	19.44	23.70	27.94	32.11	36.16	40.11
35	19.24	23.50	27.74	31.90	35.96	39.90

NOTE: For intermediate ambient temperatures, subtract 0.04 mv for each °Celsius above the next lower ambient temperature.

Table 8-6. EGT Indicator Scale and Friction Error Tolerances Plus or Minus °Celsius

TEST POINTS °CELSIUS	SCALE ERROR	FRICTION
500	20	30
600	10	30
700	5	30
800	10	30
900	20	30
1,000	30	30

8-110. Installation - Exhaust Gas Temperature Indicator. Refer to paragraph 8-7 for installation procedure.

NOTE

Replacement of exhaust gas temperature indicator requires a function test in accordance with paragraph 8-105.

8-111. THERMOCOUPLE LEAD SPOOL RESISTOR.

8-112. Description – Thermocouple Lead Spool Resistor. The thermocouple lead spool resistor provides a means of adjusting the resistance within the EGT circuitry to calibrate the EGT indicator.

8-113. Cleaning — Thermocouple Lead Spool Resistor. Remove moisture and dirt from cover with a clean, lint-free cloth.

8-114. Inspection — Thermocouple Lead Spool Resistor. Inspect resistor for loose connections, corrosion, broken wires, broken terminals, and damage to cover or cover fasteners.

8-116. Functional Test – Thermocouple Lead Spool Resistor. Refer to paragraph 8-105 for functional test procedure.

8-116. Troubleshooting – Thermocouple Lead Spool Resistor. Refer to paragraph 8-106 for troubleshooting.

8-117. Adjustment - Thermocouple Lead Spool Resistor.

CAUTION

To maintain proper accuracy, use only an EGT analyzer when making resistance adjustment.

NOTE

The EGT indicator is calibrated to give accurate temperature readings when the circuit resistance is 8 ohms. Adjustment of spool resistor may be required when engine or thermocouple harness is replaced. Adjustment can also compensate for change in thermocouple harness resistance (resistance increases with time in service). See paragraph 8-105 for resistance check.

a. Check total circuit lead resistance by using an EGT analyzer (T3.1) connected to the indicator leads (indicator disconnected and engine furnished harness connected). Resistance should read 8 ohms plus or minus 0.05 ohm. Replace thermocouple spool resistor if reading is less than 7.95 ohms.

NOTE

Visually inspect engine thermocouples for damage, clean all circuit connectors and re-check circuit resistance prior to adjusting or replacing spool.

b. Adjust resistance by removing short lengths of wire from the resistance spool. (Reference paragraph 8-120.b).

8-118. Removal – Thermocouple Lead spool Resistor. a. Remove cover.

b. Remove alumel lead to resistor.

c. Unsolder resistor spool lead and remove spool.

8-119. Repair or Replacement — Thermocouple Lead Spool Resistor. a. Tighten loose connections.

b. Replace or repair damaged cover.

c. Replace spool resistor if wires are broken or corroded.

d. Replace spool resistor if circuit resistance is less than 7.95 ohms.

8-120. Installation – Thermocouple Lead Spool Resistor.

NOTE

New spool resistors have only one end of the winding soldered to a terminal. The other end is free to permit adjustment.

a. Position resistor spool in place, solder lead to spool terminal and attach alumel lead to resistor lug.

b. Scrape off insulation at free end of wire. Touch bare wire to other terminal and check circuit resistance.

(1) If circuit resistance is 7.95 to 8.05 ohms, solder bare wire to terminal.

(2) If circuit resistance exceeds 8.05 ohms, unsolder end of resistor winding. Unwind a turn or two of wire at a time and scrape off insulation. Touch bare wire to the terminal and check circuit resistance. When resistance of 7.95 to 8.05 ohms is indicated, cut the wire and solder to terminal.

(3) If circuit resistance is less than 7.95 ohms, replace spool resistor and repeat preceding steps a and b.

c. Install cover.

8-121. FUEL PRESSURE INDICATING SYSTEM.

8-122. Description — Fuel Pressure Indicating System. The fuel pressure indicating system includes the fuel pressure indicator and the fuel pressure transmitter. The system is powered by the 28 Vac bus, and is protected by a one ampere FUEL PRESSURE IND circuit breaker.

8-123. FUEL PRESSURE INDICATOR.

8-124. Description — Fuel Pressure Indicator. The fuel pressure indicator, located on the instrument panel, provides indication in psi of pressure in the main fuel supply line by means of an electrical fuel pressure transmitter.

8-125. Cleaning — Fuel Pressure Indicator. Refer to paragraph 8-3 for cleaning procedures.

8-126. Inspection — Fuel Pressure Indicator. Refer to paragraph 8-4 for inspection procedure.

8-127. Functional Test — Fuel Pressure Indicator. a. Energize main inverter by placing INV switch to MAIN.

b. Close FUEL PRESSURE IND circuit breaker.

c. Disconnect the fuel pressure line from fuel pressure transmitter. Using variable pressure tester (T10.1), apply pressure while monitoring pilots fuel pressure indicator. Indicated pressure shall be 50 ± 7 psi when applied pressure is 50 psi.

d. Open FUEL PRESSURE IND circuit breaker and reconnect the fuel pressure lines.

8-128. Troubleshooting — Fuel Pressure Indicator. Use Table 8-7 and perform checks as necessary to isolate trouble. (figure F-12.)

NOTE

Before using this table, be sure all normal operational checks have been performed.

Table 8-7. Troubleshooting Fuel Pressure Indicator

CONDITION

TEST OR INSPECTION

CORRECTIVE ACTION

1. Pressure indicator is reading low.

   STEP 1. Check for kinked or obstructed pressure line.

   Replace or clean obstructed line.

2. Pressure indicator is inaccurate or sticking.

   STEP 1. Determine if indicator is defective.

   Replace indicator if defective (paragraph 8-1).

3. Pressure indicator is inoperative.

   STEP 1. Determine if pressure indicator is defective.

   Replace indicator if defective (paragraph 8-1).

Table 8-7. Troubleshooting Fuel Pressure Indicator (Cont)

CONDITION TEST OR INSPECTION	CORRECTIVE ACTION
STEP 2. Perform continuity check of circuit between transmitter and indicator.	**Repair or Replace electrical leads.**
STEP 3. Perform functional test (paragraph 8-127) to determine if pressure transmitter is defective.	**Replace defective pressure transmitter (paragraph 8-132).**
4. Pressure indicator shows fluctuating pressure indication.	
STEP 1. Check for loose electrical connections and determine if instrument is clamped too tight.	**Tighten electrical connections or readjust clamp.**
STEP 2. Perform functional test (paragraph 8-127) to determine if pressure transmitter is defective.	**Replace defective pressure transmittal (paragraph 8-1).**

8-129. Removal — Fuel Pressure Indicator. Refer to paragraph 8-5 for removal procedures.

8-130. Repair or Replacement — Fuel Pressure Indicator. Refer to paragraph 8-6 for repair or replacement criteria.

8-131. Installation — Fuel Pressure Indicator. Refer to paragraph 8-7 for installation procedure.

8-132. FUEL PRESSURE TRANSMITTER.

8-133. Description – Fuel Pressure Transmitter. The fuel pressure transmitter, mounted on right engine deck level just ahead of forward firewall, monitors pressure in the main fuel supply line and transmits voltage signals to the fuel pressure indicator (paragraph 8-123).

8-134. Cleaning — Fuel Pressure Transmitter. a. Remove moisture and loose dirt with clean, soft cloth.

WARNING

Dry cleaning solvent is flammable and its fumes are toxic. Provide adequate ventilation. Do not use near a flame.

b. Remove oil, grease, fungus, and dirt with a clean, lint-free cloth dampened with dry cleaning solvent (C261).

c. Remove dirt from electrical connectors with a bristle brush (C52).

8-136. Inspection — Fuel Pressure Transmitter. a. Inspect pressure transmitter for cracks, secure and proper mounting, and proper operation.

b. Inspect fuel line and fitting connection for leaks and proper installation.

c. Inspect electrical connector for damaged or bent pins and cracked inserts.

8-136. Functional Test – Fuel Pressure Transmitter. Refer to paragraph 8-127 for functional test.

8-137. Troubleshooting — Fuel Pressure Transmitter. Refer to paragraph 8-128 for troubleshooting.

8-138. Removal - Fuel Pressure Transmitter. a. Open right aft pylon access door to gain access to pressure transmitter.

b. Cut lockwire and disconnect electrical connector from transmitter.

c. Disconnect pressure hose from transmitter mount.

d. Remove four screws and washers from transmitter mount.

e. Remove transmitter.

8-139. Repair or Replacement—Fuel Pressure Transmitter.

a. Repair damaged electrical connectors.

b. Tighten loose fuel line or fitting connection.

c. Replace defective or damaged fuel line or fitting.

d. Replace pressure transmitter if cracked or damaged.

e. Reinstall improperly mounted pressure transmitter.

8-140. Installation—Fuel Pressure Transmitter.

a. Install transmitter in mount using four screws and four washers.

b. Connect fuel pressure hose to union and connect electrical connector and lockwire.

c. Close access door.

8-141. TORQUE PRESSURE INDICATING SYSTEM.

8-142. Description—Torque Pressure Indicating System. The torque pressure indicating system includes the torque pressure indicator (paragraph 8-143) and torque pressure transmitter (paragraph 8-152). The system is powered from the 28 Vac bus, and is protected by a 1 ampere TORQUE PRESSURE IND circuit breaker.

8-143. TORQUE PRESSURE INDICATOR.

8-144. Description—Torque Pressure Indicator. The torque pressure indicator, mounted in the instrument panel, indicates engine output shaft torque pressure in psi by means of the torque pressure transmitter (paragraph 8-152).

8-145. Cleaning—Torque Pressure Indicator. Refer to paragraph 8-3 for cleaning procedure.

8-146. Inspection—Torque Pressure Indicator. Refer to paragraph 8-4 for inspection procedure.

8-147. Functional Test—Torque Pressure Indicator.

a. Disconnect pressure line from the torque pressure transmitter.

b. Connect variable pressure (0-150 psi) tester (T10.1) to input line on torque pressure transmitter.

c. Energize main or standby inverter. Close 28V XFMR circuit breaker and TORQUE PRESSURE IND circuit breaker.

d. Apply pressure to the transmitter input port monitoring the torque pressure indicator. Vary torque pressure from 0 to 60 psi in increments of 10 psi. The tolerance for each pressure is shown in the table below. The indicated pressure should not exceed the applied pressure +/- the tolerance at room temperature.

Test Pressure (PSI)	Tolerance (+/- PSI)
0	1.0
10	1.0
20	1.0
30	1.0
40	1.0
50	1.0
60	1.0

NOTE

The following Torque Pressure Indicator/ Torque Pressure Transmitter combinations are required for Torque System applications: Calibrated gage must be used to check the system at intervals listed above.

(1) Edison Transmitter with Edison Indicator.

(2) Edison Transmitter with Courter Indicator.

(3) Edison Transmitter with General Aero Products Indicator.

(4) Bendix Transmitter with Edison Indicator.

(5) Bendix Transmitter with Courter Indicator.

8-148. Troubleshooting—Torque Pressure Indicator. Use table 8-8 and perform checks as necessary to isolate trouble (figure F-12).

NOTE

Before using this table, be sure all normal operational checks have been performed. Calibrated gage must be used to check the system at intervals listed above.

Table 8-8. Troubleshooting Torque Pressure Indicator

CONDITION

TEST OR INSPECTION

CORRECTIVE ACTION

1. Pressure indicator is inaccurate or sticking.

STEP1. Determine if indicator is defective.

Replace indicator if defective (paragraph 8-1 and 8-147).

2. Pressure indicator has sluggish action.

STEP 1. Check for sludge in pressure line.

Bleed pressure line.

3. Pressure indicator is inoperative or reading low.

STEP 1. Determine if pressure indicator is defective.

Replace indicator if defective (paragraph 8-1 and 8-147).

STEP 2. Perform continuity check of circuit between transmitter and indicator.

Repair or replace electrical leads.

STEP 3. Check for kinked or obstructed pressure line.

Replace or clean obstructed line.

STEP 4. Perform functional check (paragraph 8-147) to determine if pressure transmitter is defective.

Replace defective pressure transmitter (paragraph 8-1).

STEP 6. Determine if pressure metering valve is defective.

Refer to TM 55-2840-229-23.

STEP 6. Determine if inverter voltage output is correct. Check voltage output to indicator.

4. Pressure indicator shows fluctuating pressure indication.

STEP 1. Check for loose electrical connections and determine if instrument is clamped too tight.

Tighten electrical connections or readjust clamp.

STEP 2. Ensure that correct restrictor (0.025 to 0.027 orifice) is installed in system.

Install correct restrictor (paragraph 8-160).

STEP 3. Restrictor orifice blocked or clogged.

Clean restrictor orifice.

Table 8-8. Troubleshooting Torque Press Indicator (Cont)

CONDITION	TEST OR INSPECTION	CORRECTIVE ACTION
	STEP 4. Perform functional test (paragraph 8-147) to determine if pressure transmitter is defective.	**Replace defective pressure transmitter (paragraph 8-152).**

8-149. Removal — Torque Pressure Indicator, Refer to paragraph 8-5 for removal procedure.

8-150. Repair or Replacement — Torque Pressure Indicator. Refer to paragraph 8-6 for repair or replacement criteria.

8-151. Installation — Torque Pressure Indicator. Refer to paragraph 8-7 for installation procedure. Perform functional test, paragraph 8-147.

8-152. TORQUE PRESSURE TRANSMITTER.

8-153. Description — Torque pressure Transmitter. The torque pressure transmitter, mounted on a bracket on the right side of the engine, monitors engine output shaft torque and transmits varying voltage signals to the torque pressure indicator (paragraph 8-143).

8-154. Cleaning — Torque Pressure Transmitter.
a. Remove moisture and loose dirt with a clean, soft cloth.

WARNING

Dry cleaning solvent is flammable and its fumes are toxic. Provide adequate ventilation. Do not use near a flame.

b. Remove oil, grease, fungus, and dirt with a clean lint-free cloth dampened with dry cleaning solvent (C261).

c. Remove dirt from electrical connectors with a soft bristle brush (C52).

8-155. Inspection — Torque Pressure Transmitter. a. Inspect pressure transmitter for cracks, secure and proper mounting, and proper operation.

b. Inspect oil line and fitting connection for leaks and proper installation.

c. Inspect electrical connector for damaged or bent pins and cracked inserts.

8-156. Functional Test — Torque Pressure Transmitter. Refer to paragraph 8-147 for functional test.

8-157. Troubleshooting — Torque pressure Transmitter. Refer to paragraph 8-148 for troubleshooting.

8-158. Removal — Torque Pressure Transmitter.
a. Open upper right engine cowling.

b. Disconnect electrical connector and oil line from pressure transmitter.

c. Cap opening of oil line. Protect electrical connector with electrical tap (C142).

d. Cut lockwire, remove jam nut and remove pressure transmitter from mounting bracket.

8-159. Repair or Replacement — Torque Pressure Transmitter. a. Repair damaged electrical connectors.

b. Tighten loose oil line or fitting connection.

c. Replace defective or damaged oil line or fitting.

d. Replaced pressure transmitter if cracked or damaged.

e. Reinstall pressure transmitter.

8-160. Installation - Torque Pressure Transmitter.

CAUTION

Check that correct restrictor (0.025 TO 0.027 Inch orfice) is installed in torque pressure port of engine (right side) prior to connecting oil pressure line to the forward end of transmitter.

NOTE

Refer to paragraph 4-147 for proper placement of union.

a. Position pressure transmitter onto mounting bracket, install jamnut. Install lock-wire.

b. Remove protective covers and connect oil line and electrical connector to pressure transmitter. Install cowling.

SECTION III. FLIGHT INSTRUMENTS

8-161. FLIGHT INSTRUMENTS.

8-162. Description — Flight Instruments. Flight instruments include the pitot-static system, airspeed indicator, barometric altimeter, attitude indicating system, turn and slip indicator, clock and radar altimeter, and vertical velocity indicator.

8-163. PITOT-STATIC SYSTEM.

NOTE

Except for the use of system drain, a functional check of the pitot static system and pitot static instruments will be performed following any opening and closing of the pitot static system.

8-164. Description — Pitot Static. System. The pitot-static system consists of the electrically heated pitot tube, two static ports, pitot and static drains, and pitot and static lines and tubing necessary to connect to airspeed indicators, altimeters, and vertical velocity indicator. The pitot tube, which has a heating element for icing conditions, is located on forward left side of cabin nose, or top right hand side of cabin roof. Static air pressure vents are located just forward of each crew door, with piping to altimeters, vertical velocity indicators, and airspeed indicators. Helicopters having pitot tube installed in roof have static port incorporated into pitot head (figure 8-1)

NOTE

Pitot tube is mounted on cabin roof on helicopters Serial No. 66-746 and subsequent, and on nose on helicopters prior to Serial No. 66-746.

8-165. Cleaning — Pitot-Static System, a. Pitot-Static Lines, Tubing, and Fittings.

(1) Disconnect pitot and static lines from airspeed indicators. Disconnect static lines from altimeters and vertical velocity indicator. Cap openings to prevent entrance of foreign material.

(2) Remove drain cap(s) and blow all lines clean with filtered, compressed air.

(3) Uncap openings in instruments. Apply silicone compound (C260) to threads of nuts and fittings and reconnect all lines.

(4) Install drain cap(s).

(5) Perform functional tests (paragraph 8-218.2).

b. Pitot Tube.

WARNING

Dry cleaning solvent is flammable and its fumes are toxic. Provide adequate ventilation. Do not use near flame.

(1) Clean pitot tube head with a clean, lint-free cloth dampened with dry cleaning solvent (C261).

(2) Clean mount with a clean, lint-free cloth dampened with dry cleaning solvent (C205).

8-166. Inspection — Pitot-Static System.
a. Pitot-Static Lines, Tubing, and Fittings.

(1) Inspect lines, tubing, and fittings for leaks, chafing, crimping, or other visible damage.

(2) Inspect system for improperly installed fittings and clamps.

(3) Inspect static pressure vents to ensure that they are clean and free of foreign matter that may obstruct airflow.

b. Pitot Tube.

(1) Inspect pitot tube for clogged or obstructed inlet opening, and clogged drain hole on bottom of tube.

(2) Inspect pitot tube for cracks or damage.

(3) If pitot tube head is removed, inspect electrical receptacle, pins, and sockets for damage.

c. Operational Check.

(1) Close PITOT TUBE HEATER circuit breaker.

(2) Position pitot heater switch (S9) to ON and check that pitot tube heating element is energized. Return switch (S9) to OFF.

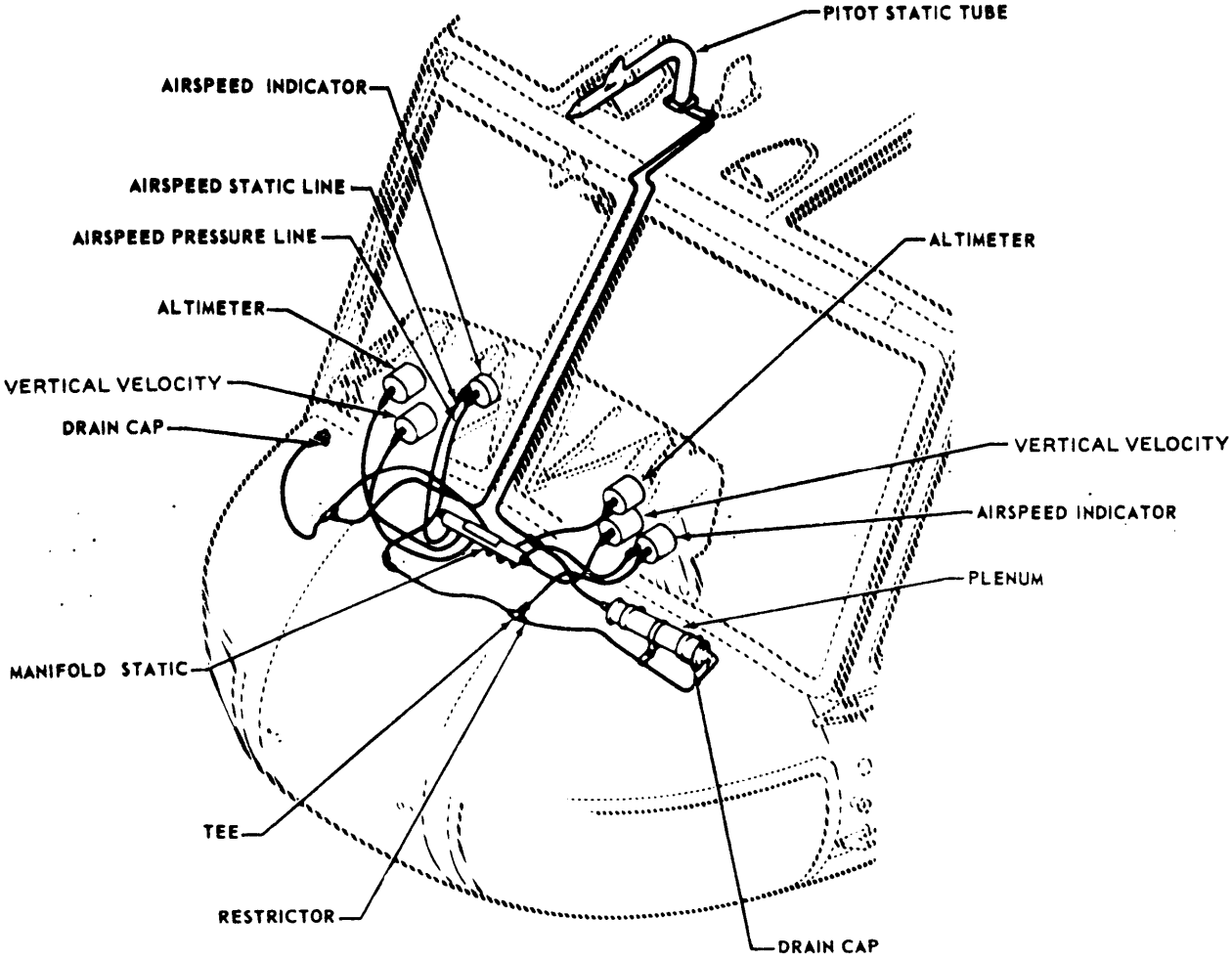

Figure 8-1. Instrument Piping (Roof-Mounted Pitot Tube) (Sheet 1 of 2)

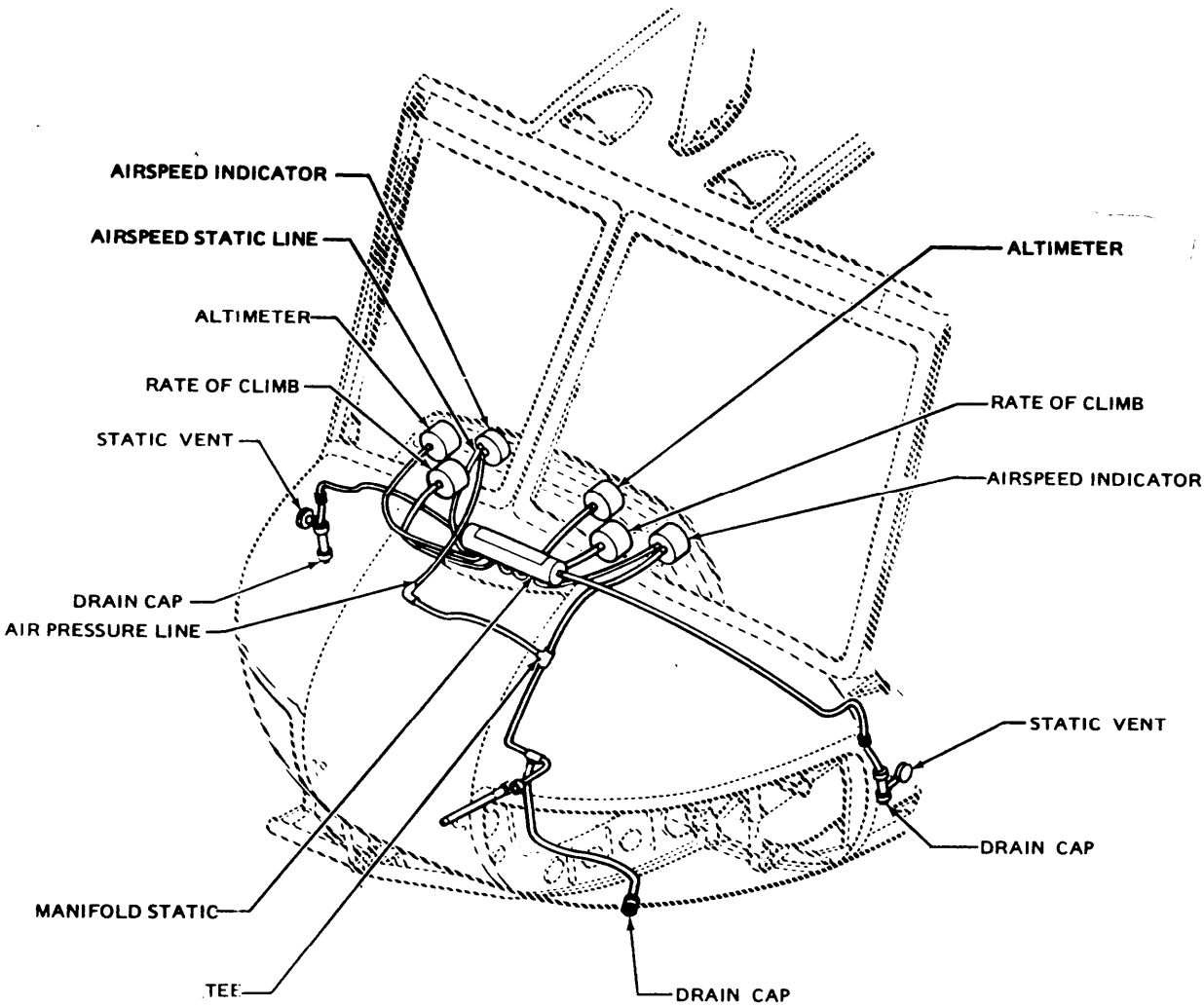

Figure 8-1. Instrument Piping (Nose-Mounted Pitot Tube) (Sheet 2 of 2)

8-167. Functional Test — Pitot-Static System. Perform functional test. Refer to paragraph 8-218.2.

8-168. Troubleshooting — Pitot-Static System. Refer to applicable portions of tables 8-9, 8-10, 8-13 and perform checks as necessary to isolate trouble.

8-169. Removal — Pitot-Static System. a. Pitot-Static Lines, Tubing, and Fittings.

(1) Disconnect pitot and static lines from indicators. Cap openings in indicators to prevent entrance of foreign material.

(2) Disconnect applicable fittings and clamps.

(3) Remove pitot and static lines.

b. Pitot Tube.

(1) Check that system electrical power is OFF.

(2) Gain access to pitot tube. Access is obtained through overhead console if pitot tube is roof mounted and through nose compartment if pitot tube is nose mounted.

(3) From inside the helicopter, remove the clamps securing the pitot line and pitot heater electrical wires.

(4) Disconnect tube assembly(s) and install protective caps on open ends of fittings.

(5) From outside the helicopter, remove the screws and lockwashers attaching pitot tube head to support.

(6) Carefully pull pitot tube from support to expose electrical connector and pitot line coupling. Disconnect electrical connector. Disconnect coupling from adapter. Cap open adapter and tape electrical connector to prevent entrance of foreign material.

8-170. Repair or Replacement-Pitot-Static System. a. Pitot-Static Lines, Tubing, and Fittings.

(1) Replace defective or damaged pitot and static lines or tubing

(2) Tighten or properly install fittings and clamps

(3) Replace defective or damaged fittings or clamps.

b. Pitot Tube.

(1) Replace pitot tube if inlet opening is closed or obstructed, drain hole is clogged, or electrical connector is damaged.

(2) Replace pitot tube it cracked or damaged to the extent it would restrict impact air pressure.

(3) Replace defective or damaged pitot electrical connector.

(4) Tighten or properly install fittings.

6-171. Installation—Pitot-Static System. a. Pitot-Static Lines, Tubing, and Fittings.

(1) Route pitot and static lines in place through clamps. Apply silicone compound (C195) to threads of nuts and fittings and connect all lines.

(2) Apply silicone compound (C250) to threads of tubing nuts and fittings. Position tubing in place and connect. Install clamps.

(3) Conduct functional test of system. (Refer to paragraph 8-218.2.

b. Pitot Tube.

(i) At pitot tube support, remove protective cap from adapter and remove tape from electrical connector.

(2) Apply silicone compound (C250) to threads of coupling.

(3) Connect pitot line coupling to adapter.

(4) Connect electrical connector to pitot tube connector.

(5) On roof mounted pitot tubes only, apply sealant (C244). Carefully position pitot tube into support and install mounting screws and lockwashers.

(6) From inside helicopters, remove protective caps from fittings. Apply silicone compound (C250) to threads of nuts and fittings, and connect.

(7) Install pitot line clamp and electrical clamp

8-172. AIRSPEED INDICATOR.

8-173. Description—Airspeed Indicator. The airspeed indicator, located on the instrument panel, is a standard pitot-static instrument. The single-scale indicator provides airspeed indication in knots by measuring differences between impact air pressure from the pitot tube and atmospheric pressure from the static pressure port(s).

8-174. Cleaning—Airspeed Indicator. Refer to paragraph 8-3 for cleaning procedure.

8-175. Inspection—Airspeed Indicator. Refer to paragraph 8-4 for inspection procedure.

8-176. Functional Test—Airspeed Indicator. Re-

speed indicator.

8-177. Troubleshooting—Airspeed Indicator. Use table 8-9 and perform checks as necessary to isolate trouble (figure 8-1).

NOTE

Before using this table, be sure all normal operational checks have been performed.

Table 8-9. Troubleshooting - Airspeed Indicator.

CONDITION	TEST OR INSPECTION	CORRECTIVE ACTION
1. Pointer fails to respond.		
	Determine if pitot or static lines are improperly connected or disconnected (paragraph 8-166).	
		Connect line(s).
2. Pointer indicates incorrectly.		
STEP 1. Determine if lines are clogged.		
		Open drain(s), disconnect and blow lines clear (paragraph 8-165).
STEP 2. Perform functional test (TM 1-1500-204-23-4).		
		Replace defective indicator or lines (paragraph 8-1).

8-178. Removal - Airspeed Indicator. Refer to paragraph 8-5 for removal procedure.

8-179. Repair or Replacement-Airspeed Indicator. Refer to paragraph 8-6 for repair or replacement criteria.

8-180. Installation - Airspeed Indicator. Refer to paragraph 8-7 for installation procedure.

8-181. BAROMETRIC ALTIMETER.

8-182. Description - Barometric altimeter. The barometric altimeter, located on the instrument panel, furnishes direct readings of helicopter height in feet above sea level. The altimeter is connected through piping to static pressure port(s) to sense atmospheric pressure. An external adjustment knob is provided to make compensation for variations of prevailing barometric pressure.

Some helicopters have a type AAU-31 or a type AAU-32 barometric altimeter installed instead of the standard type AAU-8/A installation. The type AAU-32 has electronic circuitry to provide digital information to the IFF equipment. Refer to TM 11-1520-210-20 for additional information.

8-183. Cleaning - Barometric Altimeter. Refer to paragraph 8-3 for cleaning procedure.

8-184. Inspection - Barometric Altimeter. Refer to paragraph 8-4 for inspection procedure.

8-185. Functional Test - Barometric Altimeter. Refer to paragraph 8-218.2 for functional test of altimeter. AIMS altimeters, if installed, require a minimum of one minute warm up before testing and setting.

8-186. Troubleshooting - Barometric Altimeter. Use table 8-10 and perform checks as necessary to isolate trouble (figure 8-1).

NOTE

Before using this table, be sure all normal operational checks have been performed.

Table 8-10. Troubleshooting – Barometric Altimeter

CONDITION	TEST OR INSPECTION	CORRECTIVE ACTION
1. Pointer fails to respond.		
	Determine if static lines are improperly connected or disconnected (paragraph 8-166).	
		Connect line(s).
2. Pointer indicates incorrectly.		
	STEP 1. Determine if lines are clogged.	
		Open drain(s), disconnect and blow lines clear (paragraph 8-165).
	STEP 2. Perform functional test (TM 55-1500-204-25/1) .	
		Replace defective indicator or lines (paragraph 8-1).

8-187. Removal – Altimeter. Refer to paragraph 8-5 for removal procedure.

8-188. Repair or Replacement — Altimeter. Refer to paragraph 8-6 for repair or replacement criteria.

8-189. Installation — Altimeter. Refer to paragraph 8-7 for installation procedure.

8-190. ATTITUDE INDICATING SYSTEM.

NOTE

The source of data to drive the pilot's attitude indicator is selected by the. Attitude Indicator Switch. The sources are the ASN-86 (INS) and the MD-1 Attitude Gyro.

8-191. Description — Attitude Indicating System. The attitude indicating system includes the pilots and copilots attitude indicators and roll and pitch gyro. On helicopters prior to Serial No. 65-9565, the indicator amplifier is separate from the pilots attitude indicator and is located in the nose compartment. The system is powered from the 115V ac bus and pilots and copilots indicators are each protected by two 1 ampere circuit breakers. Refer to TM 11-1520-210 series maintenance manuals for information and procedures pertaining to the roll and pitch gyro.

C A U T I O N

To avoid possible damage to the MD-1 displacement gyroscope, do not move the helicoptor for twenty-five minutes after removing power from the gyrocompass system. If the helicopter must be moved within twenty-five minutes after shutdown, reapply power to the MD-1 displacement gyroscope for 5 minutes prior to moving.

8-192. ATTITUDE INDICATORS.

8-193. Description – Attitude Indicators. The pilots and copilots attitude indicators, mounted in the instrument panel, display flight attitude of the helicopter relative to the earth. Pitch attitude is indicated by motion of the sphere with respect to the miniature airplane. Roll attitude is indicated by motion of the roll pointer with respect to the fixed roll scale located at the top of the display. The indicator sphere can be adjusted to zero indication by the pitch trim knob and roll trim knob. The copilots attitude indicator contains a PULL TO CAGE knob to cage and

release the self-contained gyro. The power OFF flag is energized (out of view) by a tap on the power supply. Any interruption of indicator power will indicate a failure and the flag will be exposed.

8-194. Cleaning - Attitude Indicators. Refer to paragraph 8-3 for cleaning procedure.

8-195. Inspection - Attitude Indicators Refer to paragraph 8-4 for inspection procedure.

8-196. Functional Check - Attitude Indicators.

a. Pilots Attitude Indicator (Type IND-A5-UH1).

(1) Energize main inverter and close both PILOT ATTD circuit breakers. Check that OFF flag (power warning) disappears within two minutes, and that the display erects properly and remains stable in both pitch and roll.

(2) Rotate roll trim knob (on upper right side of indicator) to its clockwise limit. Check that bank index pointer moves left, indicating 8 to 20 degrees.

(3) Rotate roll trim knob to its counterclockwise limit. Check that bank index pointer moves right, indicating 8 to 20 degrees. Return roll trim knob to zero trim.

(4) Rotate pitch trim knob (on lower right side of indicator) to its clockwise limit. Check that indicator (miniature airplane) shall indicate 5 to 20 degrees drive (down).

(5) Rotate pitch trim knob to its counterclockwise limit. Check that indicator (miniature airplane) shall indicate 5 to 20 degrees climb (up). Return pitch trim knob to zero trim.

(6) Turn main inverter off, and, after a few seconds delay, turn spare inverter on. Check that display remains properly erected, and that pitch and bank axes remain stable. Open PILOT ATTD circuit breakers and turn spare inverter off.

b. Copilots Attitude Indicator.

C A U T I O N

The co-pilot attitude indicator should be caged and held momentarily as inverter power is appiled.

(1) Prior to main inverter turn on, pull out PULL TO CAGE knob on co-pilot attitude indicator. Turn main inverter on and dose both co-pilot attitude circuit breakers. Check that OFF flag (power warning) disappears. Release PULL TO CAGE knob. The gyro should cage and release, settling to a proper display in both pitch and roll.

(2) Rotate pitch trim knob to its clockwise limit. Check that deflection of the miniature airplane is approximately 15 degrees downward.

(3) Rotate pitch trim knob to its counterclockwise limit. Check that deflection of the miniature airplane is approximately 10 degrees upward. Return pitch trim knob to zero trim.

(4) Turn main inverter off and open COPILOT ATTD circuit breakers.

8-197. Troubleshooting - Attitude Indicators Use table 8-11 and perform checks as necessary to isolate trouble (figure F-16).

NOTE

Before using this table, be sure all normal operational checks have been performed.

Table 8-11. Troubleshooting - Attitude Indicators

CONDITION TEST OR INSPECTION	**Corrective ACTION**
1. Indicator does not operate.	
STEP 1. Conduct continuity test of circuit to determine if wiring is defective.	Repair or replace defective wiring.
STEP 2. Determine if indicator is defective.	Replace defective indicator (paragraph 8-1 and 8-196).

8-198. Removal — Attitude Indicators. Refer to paragraph 8-5 for removal procedure.

8-199. Repair or Replacement — Attitude Indicators. Refer to paragraph 8-6 for repair or replacement criteria.

8-200. Installation — Attitude Indicators. Refer to paragraph 8-7 for installation procedure.

8-201. TURN AND SLIP INDICATOR.

8-202. Description — Turn and Slip Indicator. The turn and slip indicator, located on the instrument panel, is controlled by an electrically actuated gyro. This instrument has a needle (turn indicator) and a ball (slip indicator). Although the needle and ball are combined in one instrument and are normally read and interpreted together, each has its own specific function, and operates independently of the other. The ball indicates when the helicopter is in directional balance, either in a turn or in straight and level flight. If the helicopter is yawing or slipping, the ball will be off center. The needle indicates in which direction and at what rate the helicopter is turning.

8-203. Cleaning — Turn and Slip Indicator. Refer to paragraph 8-3 for cleaning procedure.

8-204. Inspection — Turn and Slip Indicator. Refer to paragraph 8-4 for inspection procedure.

a. Inspect for obvious defects.

b. Repair minor defects.

c. Replace if defect is major or cannot be repaired.

d. Replace if pilot reports major defect.

8-205. Functional Test — Turn and Slip Indicator.

a. Close TURN & SLIP IND circuit breaker.

b. Check that indicator gyro is running.

8-206. Troubleshooting — Turn and Slip Indicator. Use table 8-12 and perform checks as necessary to isolate trouble. (See figure F-13).

NOTE

Before using this table, be sure all normal operational checks have been performed.

Table 8-12. Troubleshooting — Turn and Slip Indicator

CONDITION	TEST OR INSPECTION	**CORRECTIVE ACTION**
1. Pointer remains centered, either constantly or intermittently.	STEP 1. Determine if gyro is sticking.	**Replace defective indicator (paragraph 8-1).**
	STEP 2. Conduct continuity test of circuit to determine if wiring defective.	**Replace defective wiring or connectors (paragraph 9-5).**
2. Ball too sensitive.	Determine is damping fluid has leaked out of indicator.	**Replace defective indicator (paragraph 8-1).**

8-207. Removal — Turn and Slip Indicator. Refer to paragraph 8-5 for removal procedure.

8-208. Repair or Replacement — Turn and Slip Indicator. Refer to paragraph 8-6 for repair or replacement criteria. Check the turn part of the instrument is calibrated to a four minute turn, this checked by the pilot if judged to be inaccurate or inoperative by said pilot replace and send for recalibration/repair. The basic maintenance for this device is:

a. Inspect for obvious defects.

b. Repair minor defects.

c. Replace if defect is major or cannot be repaired.

d. Replace if pilot reports major defect.

8-209. Installation — Turn and Slip Indicator. Refer to paragraph 8-7 for installation procedure.

8-210. VERTICAL VELOCITY INDICATOR.

8-211. Description — Vertical Velocity Indicator. The vertical velocity indicator is connected to the static air system to sense the rate of atmospheric pressure change. The indicator registers ascent or descent in feet.

8-212. Clesning — Vertical Velocity Indicator. Refer to paragraph 8-3 for cleaning procedure.

8-213. Inspection — Vertical Velocity Indicator. Refer to paragraph 8-4 for inspection procedure.

8-214. Functional Test – Vertical Velocity Indicator. Refer to paragraph 8-218.2 for functional testing of vertical velocity indicator.

8-216. Troubleshooting — Vertical Velocity Indicator. Use table 8-13 and perform checks as necessary to isolate trouble (see figure 8-1).

NOTE

Before using this table be sure all normal operational checks have been performed.

Table 8-13. Troubleshooting Vertical Velocity Indicator.

CONDITION

TEST OR INSPECTION

CORRECTIVE ACTION

1. Inaccurate readings.

STEP 1. Check for loose connections in static line (paragraph 8-166).

Tighten connections.

STEP 2. Determine if indicator case leaks.

Replace indicator if case leaks (paragraph 8-1).

STEP 3. Determine if indicator is defective.

Replace defective indicator (paragraph 8-1).

2. Indicator pointer off zero.

Determine if mechanism has shifted.

Tap face of indicator lightly while adjusting and return pointer to zero by turning adjustment knob.

3. Excessive indicator pointer oscillation.

STEP 1. Determine if there is a leak in the static lines (paragraph 8-166).

Tighten connections red/or replace lines.

STEP 2. Determine if indicator is defective.

Replace defective indicator (paragraph 8-1).

8-216. Removal—Vertical Velocity Indicator. Refer to paragraph 8-5 for removal procedure.

8-217. Repair or Replacement — Vertical Velocity Indicator. Refer to paragraph 8-6 for repair or replacement criteria.

8-218. Installation—Vertical Velocity Indicator. Refer to paragraph 8-7 for installation procedure.

8-218.1 Radar Altimeter. When radar altimeter set AN/APN-209 is installed (MWO 55-1520-210-30-48) the pilot and copilot are each provided with an instrument panel mounted indicator of absolute clearance above the ground. Refer to TM 11-1520-210-20 for description, installation and maintenance of the system components.

8-218.2 Functional Test — Pitot Static System.

WARNING

Do not turn selector valves or disconnect hoses unless instruments read zero.

Do not operate rate of climb indicator over 3000 feet per minute ascending or descending.

CAUTION

Do not apply suction to pitot lines. Do not apply pressure to static lines. The only exception is when specifically required in a procedure.

When operating pressure side (airspeed indicator) make sure vacuum UP and DOWN valves are open. When operating vacuum side (altimeter, rate of climb indicator) make sure PRESSURE UP and, DOWN valves are open.

NOTE

Before starting any checks, make sure all connections are secure and system drain caps are installed.

a. Pitot Line Leak Check (figure 8-1.1).

(1) Install pitot static test adapter on roof-mounted pitot static tube and place pitot drain seal pad behind fin to seal drain holes. On nose-mouned pitot tubes, seal pitot head drain holes (on bottom of head) with pressure sensitive tape (C275). Attach pitot head adapter P/N SK-ED-0018, provided as an accessory for the pitot static system tester, to the pitot tube.

(1.1) An alternate method is to connect to pitot line. For aircraft with a roof-mounted pitot static tube, drop the overhead panel and disconnect the pitot and static lines. (For aircraft with nose-mounted pitot tubes, the pitot and static lines will be disconnected in chin bubble area.) Blow air backwards through pitot and static tube/pitot tube and static ports as necessary to clear obstruction.

(2) Connect hose assembly to pitot static test adapter as shown on figure 8-1.1 to pitot head adapter on the separate pitot tube or to aircraft pitot line.

(3) Connect hose assembly to pitot head and AIRSPEED outlet (rear of tester). Make sure both VACUUM UP and DOWN valves are open and PRESSURE UP and DOWN valves are closed. Slowly open PRESSURE UP valve until airspeed indicators read approximately 120 knots. Then close PRESSURE UP valve.

(4) Gently tap airspeed indicators to remove friction effects. If indicator drops more than 8.7 knots in one minute, a leak is present. Open PRESSURE DOWN valve until tester airspeed indicator reads zero.

(5) Troubleshoot to determine source of leak and repair as necessary. Repeat above steps until airspeed drop is 8.7 knots or less.

b. Airspeed indicator Functional Test.

(1) Make sure VACUUMUP and DOWN valves are opened and PRESSURE UP and DOWN valves are closed. Slowly open PRESSURE UP valve until tester airspeed indicator reads 40 knots. Then close PRESSURE UP valve.

(2) Gently tap aircraft indicators to remove friction effects. Continue opening PRESSURE UP valve in increments so that indicators read airspeeds shown in table 8-13.1.

(3) Slowly open PRESSUREDOWN valve until test unit indicator reads zero. If readings are not within tolerances shown in table 8-13.1, replace indicator with serviceable unit and repeat above steps.

c. Static Line Leak Check (figure 8-1.2).

(1) Install flush static port adapter, P/N SK-ED-0017, an accessory for the pitot static systems tester, on aircraft equipped with separate static ports.

CAUTION

Connecting pitot head to RATE OF CLIMB/ALTIMETER outlet is done during static line leak check to prevent damage to the airspeed indicator diaphragm or remove static line from aircraft airspeed indicator and cap before proceeding with static system checks.

(2) Connect a hose assembly from RATE OF CLIMB ALTIMETER outlet to both ports of pitot static test adapter as shown on figure 8-1.2 or to both the pitot and static lines. On aircraft with separate pitot probes, the hose assembly is connected from both pitot head adapter and flush static port adapter to the RATE OF CLIMB/ALTIMETER outlet.

(3) Tape a piece of rubber over other static port.

(4) Adjust test unit and aircraft altimeter barometric scales to read 29.92. Gently tap altimeter bodies and compare aircraft altimeter reading with test unit altimeter reading corrected using calibration data (top of tester.

(5) If aircraft altimeter reading(s) differ from corrected tester altimeter reading by more than the altimeter scale error tolerance requirements of table 8-13.3 replace aircraft altimeter(s) with serviceable unit(s) and repeat step (4).

(6) Make sure PRESSURE UP and DOWN valves are open. Make sure VACUUM UP and DOWN valves are closed. Slowly open VACUUM UP valve until the aircraft altimeters read 1000 feet above reading established in step (4).

(7) Close VACUUM UP valve and gently tap both aircraft altimeters until rate of climb indicator stabilizes at zero. After stabilization, the altimeters should not drop more than 100 feet in one minute. Slowly open VACUUM DOWN valve until rate of climb stabilizes at zero. Repair any faults (if necessary) and repeat this step until altitude drop is less than 100 feet.

d. Vertical Velocity Indicator Functional Test.

(1) Deleted

(2) Deleted

(3) Make sure both PRESSURE UP and DOWN valves are open. Close VACUUM UP and DOWN valves. Slowly open VACUUM UP valve until vertical velocity indicator starts to move. As altimeter starts to read altitudes listed in table 8-13.2, check to see if rate of ascent is within tolerance. After rate stabilizes, gently tap the indicator body to remove any mechanical friction, and compare the readings to the test unit calibration data (on top of test unit). Record the readings and close VACUUM UP valve.

(4) Slowly open VACUUM DOWN valve until desired rate of descent is reached. After rate stabilizes, gently tape the instrument body to remove any mechanical friction and compare the readings to the test unit calibration data. Record the readings and close VACUUM DOWN valve.

(5) Replace vertical velocity indicator(s) that exceed tolerances listed in table 8-13.2.

e. Altimeter functional check.

(1) Apply 28 volt power to aircraft electrical system to provide electrical power for counter drum altimeter vibrations.

(2) Slowly apply vacuum to aircraft system at a rate not to exceed tester and aircraft rate of climb ratings. Continue to apply vacuum until altimeter readings reach the next higher reading on table 8-13.3 above altimeter altitude indicated when barometric scale is set at 29.92. Close vacuum valve and keep altimeter at this setting for at least one minute, but not more than five minutes, then gently tap three pointer type altimeters before reading. Check to insure that vibrators are operative on counter drum altimeters before readings are compared to tolerance in table 8-13.3. Compare the readings of the installed instrument against reading on the tester and calibration data card at the check points shown in table 8-13.3.

(3) Altimeters that do not pass the performance requirements of table 8-13.3 shall be removed from aircraft and turned in for overhaul. Install a serviceable altimeter and repeat step c.(1), (2), (3), (4), (5), and e.(2) above.

(4) Remove all pitot static test adapters and hoses. Reconnect all lines and remove all tape from static ports and pitot tubes.

f. Replacement of AIMS Altimeter Encoder

(1) Disconnect pneumatic line to altimeter.

(2) Remove altimeter.

(3) Connect hose assembly directly to altimeter from test set rate of climb/altimeter outlet.

(4) Connect transponder/vibrator power connector to altimeter.

(5) Connect transponder test set AN/APM-123 or equivalent. Refer to TM 11-5895-1199-12 (Mode C operation).

(6) Perform non-radiation test. Reference TM 11-5895-490-20, Mode C.

(7) If criteria is met, install altimeter/leak test to right static drain line.

SECTION IV. NAVIGATION INSTRUMENTS

8-219. NAVIGATION INSTRUMENTS.

8-220. Description - Navigation Instruments. Navigation instruments include the course indicator, bearing heading indicator, and standby compass.

8-221. COURSE INDICATOR (ID1347( )/ARN).

8-222. Description - Course Indicator (ID1347( )/ARN. The course indicator provides visual indication of the position of the helicopter in relation to the station being received. The vertical pointer provides fly right, fly left, and on course indications. The horizontal pointer indicates passage over the station and signal strength. Two power OFF flags (vertical and horizontal) come into view when power is interrupted or signals are unreliably weak. The power OFF flags disappear from view under normal operating conditions. Refer to TM 11-1520-210-20 for description, operational check, troubleshooting, and maintenance of system components. Refer to paragraphs 8-3 through 8-7 for instrument maintenance.

8-223. RADIO MAGNETIC INDICATORS (ID-998( )/ASN AND ID250( )/ARN).

8-224. Description - Radio Magnetic Indicators ID-998( )/ASN and ID-250( )/ARN. The pilots ID-998( )/ASN and copilots ID250( )/ARN RMI indicators are dual pointer, moving dial type indicators. The ID250( )/ARN is a repeater type indicator driven by the ID-998( )/ASN indicator. The compass dial on each indicator rotates under the fixed index reference mark to indicate compass heading information from the gyromagnetic compass system (AN/ASN-43). Pointer number one of each indicator displays radio magnetic bearing information received from the direction finder set AN/ARN-83. Pointer number tow is used for VOR presentation when VOR is installed. The ID-998 Indicator has benn relocated to the copilots instrument panel. The ID-250 RMI has been replaced by the ID-663 BDHI and relocated to the pilot's instrument panel. The compass dial on each indicator rotates under the index references mark to indicate magnetic heading data from either the Gyromagnetic Compass (ASN-43) or INS (ASN-86. Pointer number one of each indicator displays magnetic bearing omformation from either the radio direction finder (ARN-83) or the VOR (ARN-123). Pointer number two displays maqnetic bearing from either the TACAN (ARN-103) or INS (ASN-86). Refer to TM 11-1520-210-20 for description, operatiomnal check, troubleshooting, and maintenance of system componets. Refer to paragraphs 8-3 through 8-7 for instrument maintenance.

8-225. STANDBY COMPASS.

8-226. Description - Standby Compass The standby compass, of standard magnetic type, is provided for navigational use. This instrument is to be used with the compass correction card which is located adjacent to the compass. Refer to paragraphs 8-3 through 8-7 for maintenance procedures.

8-227. Troubleshooting - Standby Compass Use table 8-14 and perform checks as necessary to isolate trouble.

NOTE

Before using this table, be sure all normal operational checks have been performed.

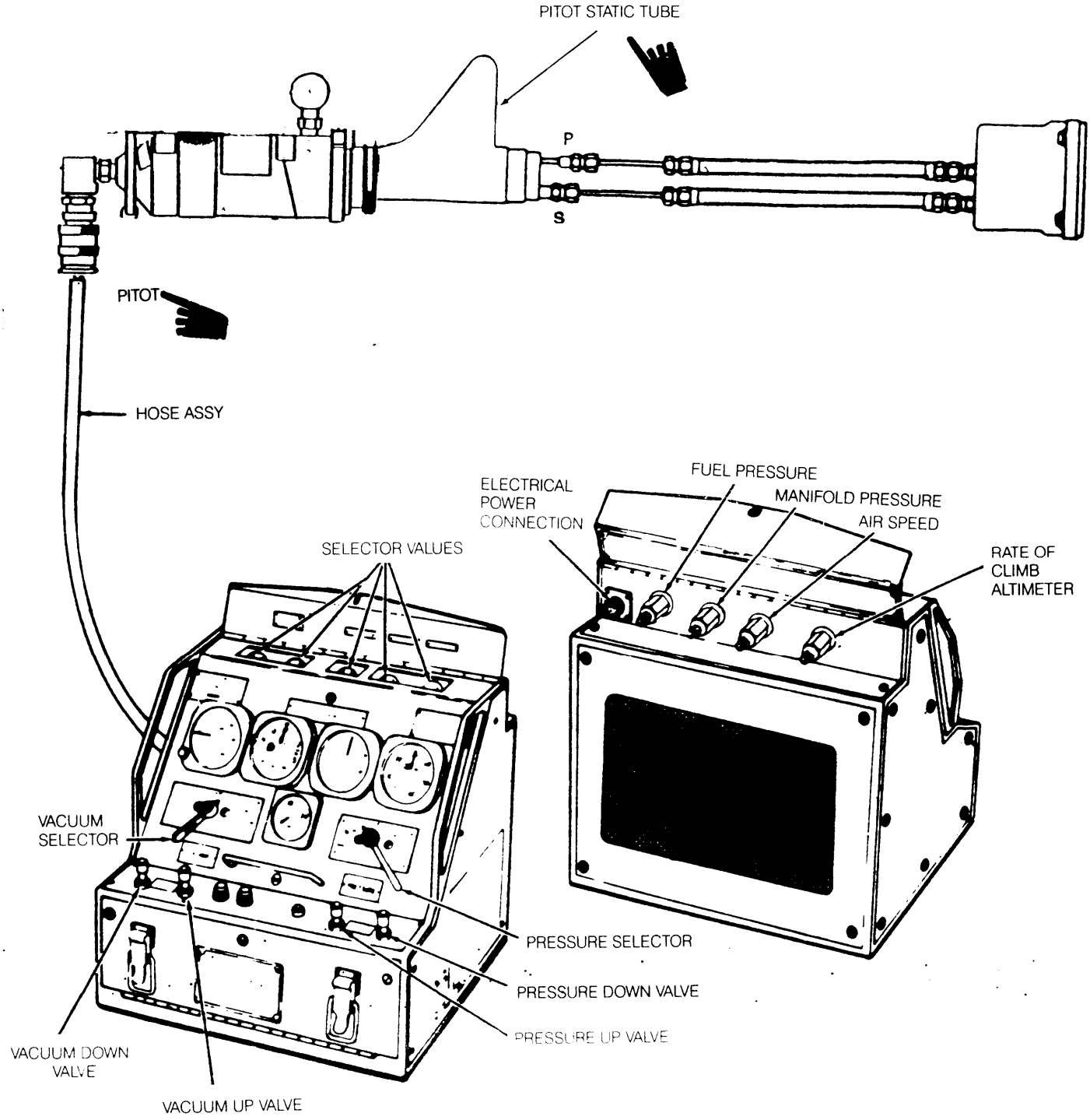

Figure 8-1.1. Connection for Pitot Leak Check (Typical)

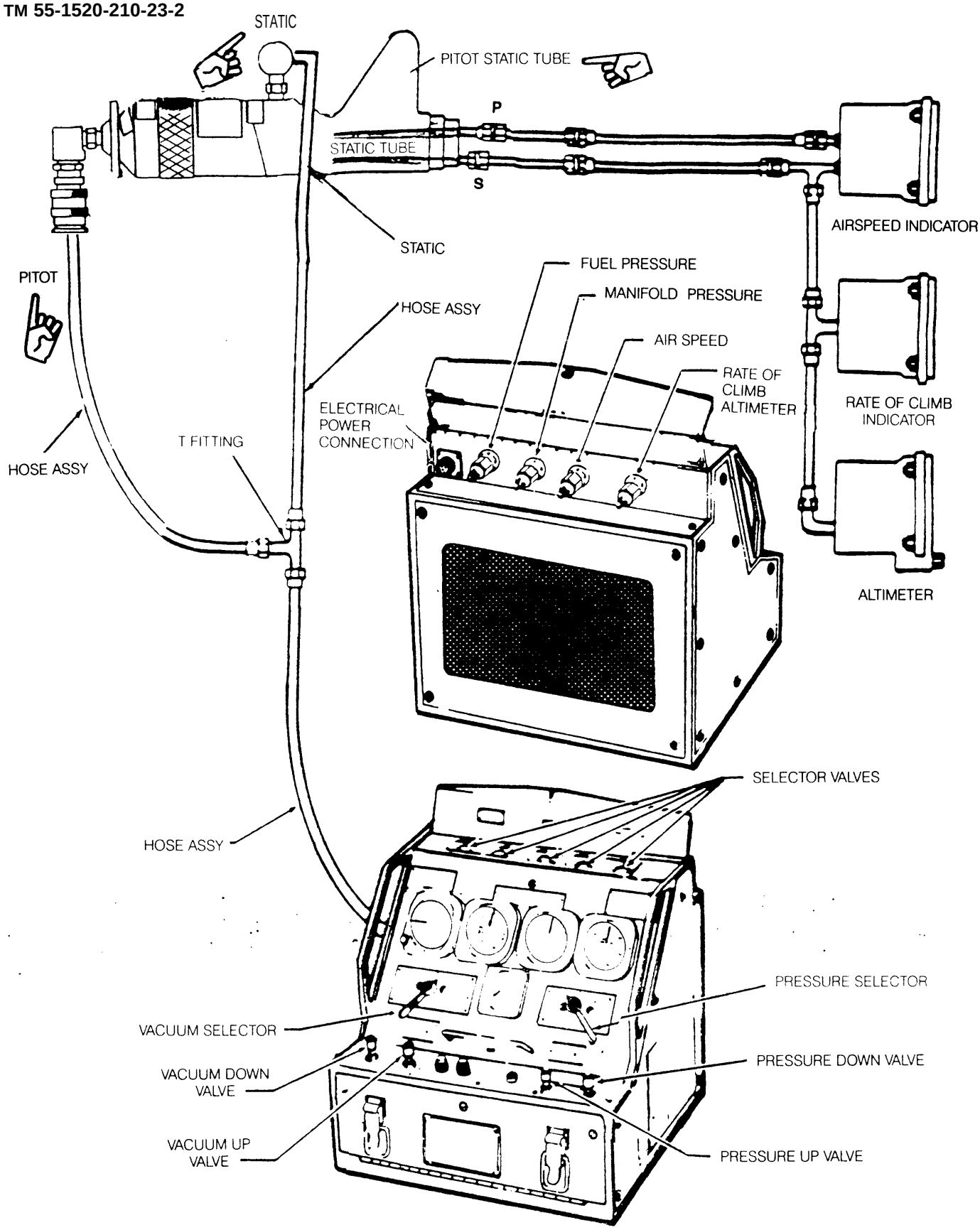

Figure 8-1.2. Connections for Static Leak Check (Typical)

Table 8-13.1 Indicator Tolerance (±Knots)

Airspeed Check Points (Knots)	MS28045 10 to 150 Knots	MS28021 20 to 250 Knots	MS28046 40 to 400 Knots
40	3	5	4
60	3	3	3
80	3	3	3
100	3	4	3
120	3	4	3
140	3	5	4
160		5	4

Table 8-13.2 Vertical Velocity Tolerance/Scale Accuracy

Standard Altitude Check Interval (Feet)	Check Rate Ascent or Descent (fpm)	Tolerance Scale Error (fpm)
2000 to 2500	500	±1OO
2000 to 2500	1000	±200
2000 to 4000	2000	±300
2000 to 5000	3000	±300
15,000 to 17,000	2000	±300

Table 8-13.3 Altimeter Scale Error

Altitude (feet)	Tolerance (±feet)
0	45
500	50
1000	50
2000	50
3000	60
5000	70
10000	95
15000	120

Table 8-14. Troubleshooting Standby Compass

CONDITION TEST OR INSPECTION	**CORRECTIVE ACTION**
1. Excessive card error.	
STEP 1. Check for external magnetic interference.	**Locate magnetic interference and eliminate if possible.**
STEP 2. Check for air or insufficient liquid in bowl.	**Replace standby compass (paragraph 8-1).**
STEP 3. Determine if compass is improperly compensated.	**Accomplish compass compensation procedure (paragraph 8-228).**
2. Card element not level.	**Check for leaking float chamber.** Replace standby compass (paragraph 8-1).
3. Card has sluggish rotation.	Determine if pivots or jewels are dirty and restricting rotation or card magnet is weak. **Replace standby compass (paragraph 8-1).**

8-228. Compensation - Standby Compass. The standby magnetic compass may be calibrated concurrently with the ASN-43 compass system. Refer to TM 11-1520-210 series maintenance manuals. Refer to TM 55-1500-204-25/1 for standard compass compensation procedure.

SECTION V. MISCELLANEOUS INSTRUMENTS

8-229. MISCELLANEOUS INSTRUMENTS.

8-230. Description — Miscellaneous Instruments. The miscellaneous instruments include the clock, fuel quantity indicating system, transmission oil pressure indicating system, transmission oil temperature indicating system, ac voltmeter, dc voltmeter, dc loadmeter, free air temperature gage, and radar warning indicating system.

8-231. CLOCK.

8-232. Description — Clock. The clock, located on the instrument panel, is an 8-day clock with added stopwatch feature for elapsed time. The clock has a sweep-second pointer and a minute totalizer hand to indicate elapsed time. A control knob on the case starts the pointers when pressed, stops both pointers when pressed a second time, and returns pointers to 12 o'clock when pressed a third time. A separate control knob winds and sets the clock.

8-233. Cleaning – Clock. Refer to paragraph 8-3 for cleaning procedure.

8-234. Inspection — Clock. Refer to paragraph 8-4 for inspection procedure.

8-235. Functional Test — Clock. Check that control knob on the case starts the pointers when pressed, stops both pointers when pressed a second time, and returns both pointers when pressed a third time.

8-236. Troubleshooting — Clock. Use table 8-15 and perform checks as necessary to isolate trouble.

NOTE

Before using this table, be sure all normal operational checks have been performed.

Table 8-15. Troubleshooting Clock

CONDITION

TEST OR INSPECTION

CORRECTIVE ACTION

CAUTION

Do not overwind clock.

1. Clock does not run.

STEP 1. Determine if clock needs winding.

Wind clock if needed.

STEP 2. Determine if clock is defective.

Replace clock if defective (paragraph 8-1).

2. Clock does not keep accurate time.

STEP 1. Determine if clock is out of adjustment.

Adjust clock to run faster or slower as needed (paragraph 8-237).

STEP 2. Determine if clock is defective.

Replace clock if defective (paragraph 8-1).

3. Pointers do not start, stop, or return when control knob is pressed through three time cycles.

Determine if control knob, pointer(s), or instrument is defective.

Replace clock if defective (paragraph 8-1).

8-237. Adjustment — Clock. Remove clock from instrument panel. Adjustment is on back of clock which adjusts clock to run faster or slower.

8-238. Removal — Clock. Refer to paragraph 8-5 for removal procedure.

8-239. Repair or Replacement – Clock. Refer to paragraph 8-6 for repair or replacement criteria.

8-240. Installation – Clock. Refer to paragraph 8-7 for installation procedure.

8-241. FUEL QUANTITY INDICATING SYSTEM.

8-242. Description — Fuel Quantity Indicating system. The fuel quantity indicating system is a bridge capacitance, balance type system which includes a fuel quantity indicator, located on the instrument panel, and three fuel quantity transmitters; two located in the right side forward fuel cell, and the other located in the aft center fuel cell. The system is powered from the 115 Vac bus, and is protected by a one ampere FUEL QTY circuit breaker. Pressing the FUEL QUANTITY TEST SWITCH, located on the pilots instrument panel, checks the fuel quantity indicator for zero return.

8-243. FUEL QUANTITY INDICATOR.

8-244. Description — Fuel Quantity Indicator. The fuel quantity indicator provides readings of fuel supply in tank system. The indicator is connected to capacitor-type probes and requires 115 Vac power source.

8-245. Cleaning — Fuel Quantity Indicator. Refer to paragraph 8-3 for cleaning procedures.

8-246. Inspection — Fuel Quantity Indicator. Refer to paragraph 8-4 for inspection procedure.

8-247. Troubleshooting — Fuel Quantity Indicator. Use table 8-16 and perform checks as necessary to isolate trouble. (See figure F-17.)

- Before Using this table, be sure all normal operational checks have been performed.

Table 8-16. Troubleshooting Fuel Quantity Indicator

CONDITION

TEST OR INSPECTION

CORRECTIVE ACTION

1. Fuel quantity indicator reads low

STEP 1. Determine if fuel quantity system is out of adjustment.

Perform adjustment procedure (paragraph 8-249).

STEP 2. Determine if compensator capacitance is too high.

Replace tank unit (paragraph 8-252).

STEP 3. Determine if tank unit capacitance is low.

Replace tank unit (paragraph 8-252).

Table 8-16. Troubleshooting Fuel Quantity Indicator (Cont)

CONDITION

TEST OR INSPECTION

CORRECTIVE ACTION

2. Fuel quantity indicator reads high.

STEP 1. Determine if fuel quantity system is out of adjustment.

Perform adjustment procedure (paragraph 8-249).

STEP 2. Determine if tank unit capacitance is too high.

Replace tank unit (paragraph 8-252).

STEP 3. Check for open lead on compensator circuit.

Repair wiring as necessary.

STEP 4. Check for open circuit in compensator section of tank unit.

Replace tank unit (paragraph 8-252).

3. Fuel quantity indicator remains at one point on scale.

STEP 1. Ensure that 115 Vac, 400 Hz power is available and determine if indicator is defective.

Replace indicator if defective (paragraph 8-1).

STEP 2. Check for grounded coaxial lead.

Repair or replace wiring as necessary.

STEP 3. Determine if 400 Hz lead is grounded. (Prolonged existence of this condition will burn out fire hazard resistor in indicator.)

Repair wiring and/or replace indicator (paragraph 8-1).

4. Fuel quantity indicator remains at zero or below.

Check for open wiring.

Repair wiring.

5. Indicator operation is sluggish.

Check wiring and tank unit for low insulation resistance of the circuit.

Replace or repair wiring or replace tank unit (paragraph 8-252).

Table 8-16. Trouble Fuel Quantity Indicator (Cont)

6. Fuel quantity indicator fluctuates.

STEP 1. Check electrical connections for proper installation.

Tighten or replace loose or faulty connections.

STEP 2. Check for loose or improperly mounted probes.

Tighten or correct probe installation.

STEP 3. Check for dogged or restricted fuel or vent lines.

Clear restriction or replace faulty line.

STEP 4. Check flapper valve for proper operation.

Adjust flapper valve (paragraph 10-56).

STEP 5. Check for leaking or sticking manifold check valve.

Check and replace manifold if faulty (paragraph 10-56).

STEP 6. Check for damaged fuel cell baffles.

Replace fuel cell (paragraph 10-3).

7. Fuel quantity indicator rotates clockwise.

STEP 1. Check for an open in wire E27A20 for Pin D(P4).

Repair or replace defective wire.

STEP 2. Check for open in coax cable.

Repair or replace defective cable.

8. Fuel quantity indicator rotates counterclockwise.

STEP 1. Check for short in wire E26A20 for Pin H(P4).

Repair or replace defective wire.

8-248. Removal-Fuel Quantity Indicator. Refer to paragraph 8-5 for removal procedure.

8-249. Teat-Fuel Quantity system (AVIM).

NOTE

Refer to paragraph 8-249.1 when using Tester T-68.1 .

a. Capacitance test.

(1) Using Tester (T68) measure the capacitance between the coaxial end compensator Lo Z terminals. Also between the coaxial and 400 Hz terminals.

(2) When measuring the capacitance between the coaxial and 400 Hertz terminal, ground the compensator to Lo Z terminal.

(3) Also, when measuring the capacitance between coaxial and compensator Lo Z terminals, ground the 400 Hertz terminal.

(4) The tank unit capacitance should be as shown below: (See fig. 8-5).

Consolidated Airborne	Tank or Simmonds	Capacitance (UUF)
PAA933	or 391019-001	25.7 ± 0.4
PAA424	or 381057-06008	67.9 ± 0.4
PAB934	or 381020-001	15.9 ± 0.3
(compensator)		25.0 ± 1.9

NOTE

Tolerance of measuring equipment must be taken into consideration in making all capacitance measurements.

b. Insulation resistance test. Using the three wire insulation resistance tester, measure the insulation resistance between the points lied below:

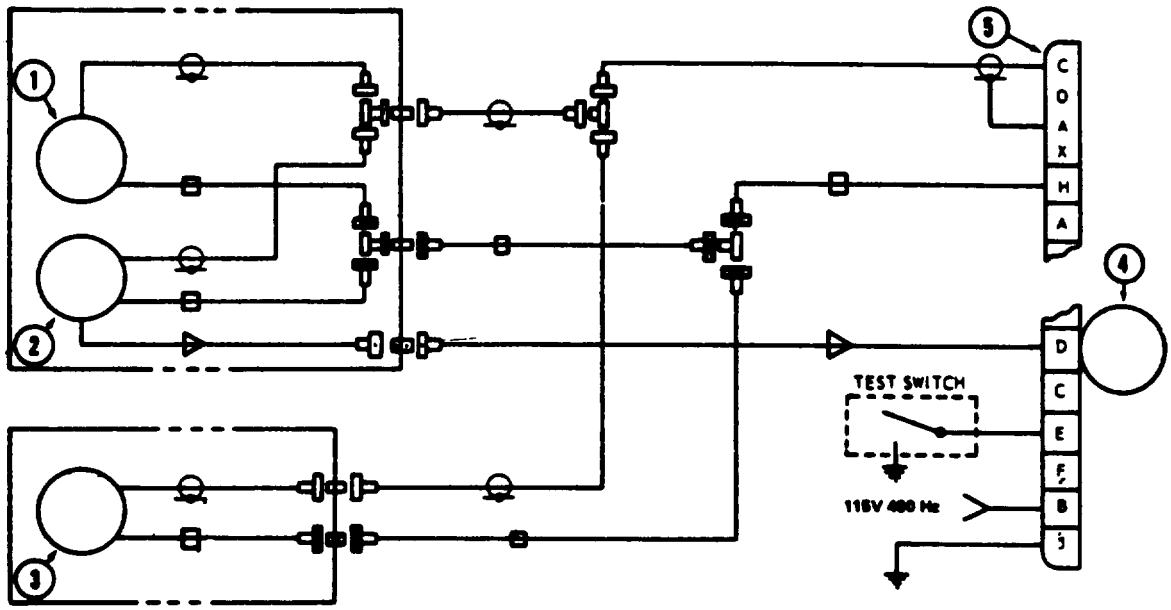

	PART NAME	PART NUMBER	REQ
1	Tank unit (Bell 205-061-633-17)	391019-001	1
2	Tank unit (Bell 205-061-633-19)	391020-001	1
3	Tank unit (Bell 205-061-633-13)	391057-06008 391046-145 or PAA 434	1
4	Indicator (Bell 205-061-633-7)	393004-01409 DSF-419	1
5	Plug (Amphenol)	165-61	1
	Test switch	165-61	1
	Coax adapter tee	1273-499	1
	400 adapter tee	1273-199	1
	Comp feed thru (Nu-Line)	1244-277	1
	400 feed thru (Nu-Line)	1244-177	2
	Coax feed thru (Nu-Line)	1244-477	2
	400 Tee (Nu-Line)	1283-199	2
	Coax tee (Nu-Line)	1283-499	2
	Comp plug (Nu-Line)	1231-206	1
	400 plug (Nu-Line)	1231-106	5
	Coax plug (Nu-Line)	1211-404	5
	Comp lead (Super Temp)	20-HE 19/32-40	As reqd
	400 lead (Super Temp)	20-HE 19/32-40	As reqd
	Coax cable (Super Temp)	T-22-1934-30 STC	As reqd

NOTE

1. All wiring to be No. 20 unshielded unless otherwise specified.
2. Total power requirements: 115V 400 1 Ø, 3.5 Watts, PF 1.0.

Figure 8-5. Schematic Diagram - Fuel Quantity Installation (Crashworthy)

(1) Center of coaxial connector to ground — not less than three megohms.

(2) Center of 400 Hertz connector to ground — not less than three megohms.

(3) Center of compensator connector to ground — not less than one megohm.

(4) Center of coaxial connector to center of 400 Hertz connector — Refer to limits in step (7).

(5) Center of coaxial connector to center of compensator connector — not less than 800 megohms.

c. Test indicator amplifier bridge assembly.

(1) Set up test circuit (See figure 8-6.)

NOTE

The adjustment controls require 40 complete turns to travel from end to end. Also no stops are incorporated so that when control runs off end of winding. indicator pointer will jump; continuous rotation in same direction will result in pointer returning to its correct position.

(2) Set capacitance of 109.5 UUF on tank unit section of tester and 51.9 UUF on compensator section. Adjust empty control so that pointer reads zero.

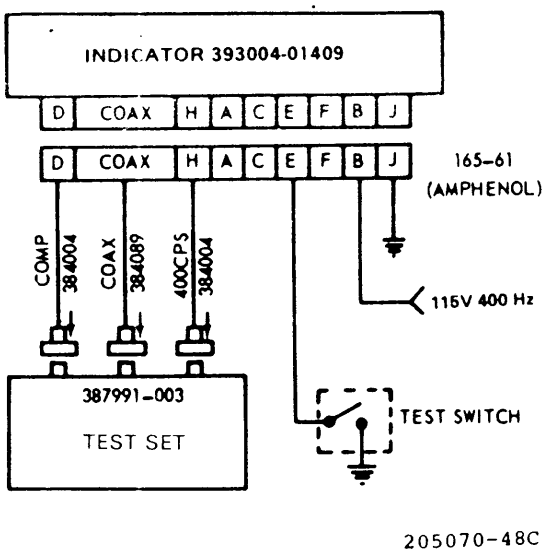

Figure 8-6. Indicator Bench Test Circuit (Crashworthy)

(3) Set tank unit section of tester to 239.7 UUF and leave compensator section set at 51.9 UUF. Adjust full control until pointer reads 1575 pounds.

(4) With compensator section set at 51.9 UUF, vary tank unit section of tester so that pointer reads at graduations shown. Capacitance must be as shown opposite indicator reading. Adjust "EMPTY" and "FULL" adjustment at back of indicator as required.

Indicator Reading (LBS)	Capacitance (UUF)
o	109.5
400	142.6 ± 1.0
800	175.6 ± 1.0
1200	208.7 ± 1.0
1575	239.7

NOTE

Some indicators may need adjusting from non-crashworthy fuel system.

(5) Cause indicator to travel from 0 to 1575 pounds and from 1575 to 0 pounds. The travel time must not be more than 30 seconds.

(6) Adjust tester so that indicator is upscale. Close test switch. Indicator should go to zero. Release test. Pointer should go back to its original position.:

d. Insulation test. After all tank units and wiring have been installed in the aircraft, it is recommended that insulation resistance of the circuits be tested. Using a three-wire insulation resistance tester, make the following insulation resistance tests at the amphenol connector disconnected from the indicator:

(1) Between compensator (Pin D) and ground (Pin J) — not less than one megohm.

(2) Between coaxial and ground — not less than one megohm.

(3) Between 400 Hertz (Pin H) and ground — not less than one megohm.

(4) Between coaxial and 400 Hertz (Pin H) — not less than 700 megohms.

(5) Between coaxial and compensator (Pin D) — not less than 800 megohms.

(6) Between 400 Hertz (Pin H) and compensator (Pin D) — not less than 10 megohms.

e. Adjustment procedure (preferred method) empty tanks.

(1) See that all connecting cables and units have been installed properly, connections are tight and the requirements of step 3 are met.

(2) Make sure all tanks are empty and turn on power.

(3) Turn "EMPTY" control unit indicator reads exactly zero.

(4) Connect Tester (T68) in parallel with ships wiring. (See figure 8-7.)

(5) Set compensator section of Tester to 26.9 UUF and the tank unit section to 130.2 UUF.

(6) Adjust "FULL" control on indicator to cause pointer to read at last dial division (1575 pounds).

(7) Disconnect adapter cable and reconnect ships wiring to indicator.

f. Adjustment procedure (alternate method) partial fuel in tanks.

(1) Disconnect the amphenol connector at the indicator and insert the adapter cable. (See figure 8-7.) Connect tester (T68) and leave aircraft wiring disconnected.

(2) Set the compensator section of the Tester to 51.9 UUF and the tank unit section to 109.5 UUF. Adjust the "EMPTY" control on the indicator to cause pointer to read zero.

(3) Leave compensator section set at 51.9 UUF and set tank unit section to 239.7 UUF. Adjust "FULL" control so that indicator pointer reads at last dial division.

g. Test values.

(1) Tank unit empty capacities values.

Circuit	Capacitance
Tank Unit (Dry)	109.5 ±1.1 UUF
Compensator Section (Dry)	25.0 UUF

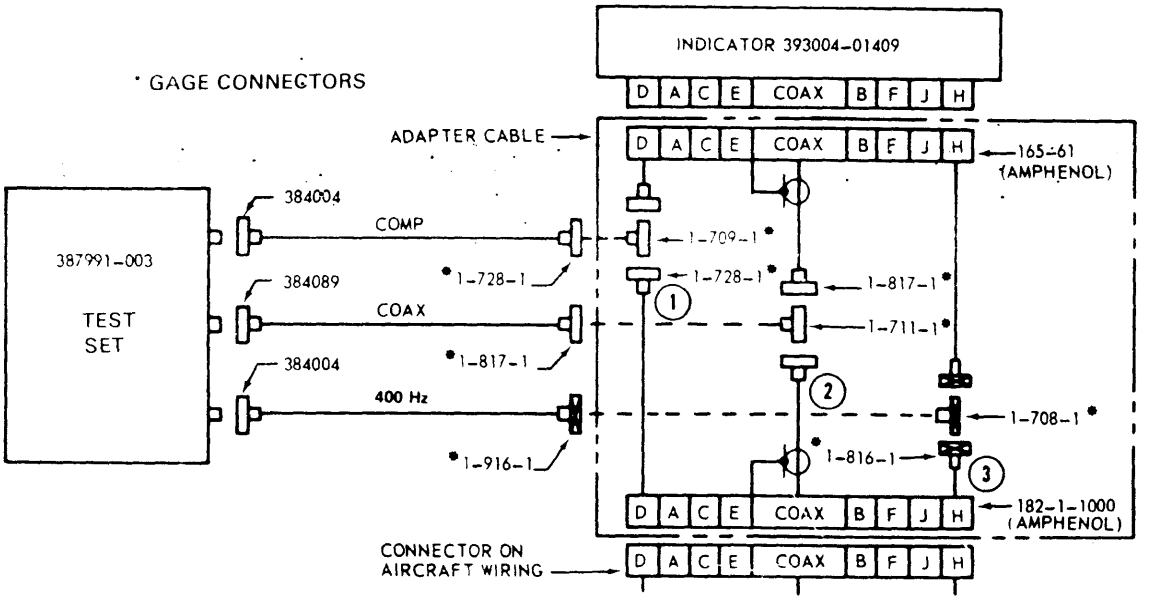

Figure 8-7. Circuit Arrangement and Adapter Cable for Adjustment Procedures (Crashworthy)

(2) Added and full capacitance values.

Capacitance (UFF)		Indicator Readings
Added	Full	(Pounds)
130.2	239.7	1575

(3) Tank unit resistance check values. Using the three wire insulation tester, or equivalent, measure from center of coaxial connector to center of 400 Hertz connector. Values should be as given below

Tank Unit Part No.	Resistance
391019-001	Not less than 3000 megohms
381057-06008 or 391046-145	Not less than 1000 megohms
391020-001	Not less than 4500 megohms

h. Adjustment Procedure (Any UH-1H Fuel System). If conditions permit, adjust fuel quantity indicator system as follows:

(1) Ensure tanks are empty, at least to a level below bottom of tank units.

(2) Adjust “Empty" adjustment on indicator to make indication read “EMPTY” or "O" fuel.

(3) Ensure ship is level and temperature is reasonably near 60° F (at least between 32° F and 90°). Fill ship with JP-4 to bottom of refueling port. If possible, note and record amount of fuel required to fill ships tank

(4) Adjust “FULL” adjustment on indicator to make indicator read proper full level for esteem.

(a) Deleted.

(b) 206.5 gal. or 1342 lbs for crashworthy fuel system.

(c) Cross check that above amounts agree with amounts of fuel added to fill ship’s tank

NOTE

Ship’s fuel volumes (gallon) capacity remains constant during ships life, but varies a little from ship to ship. Fuel density (pounds) varies with temperature (and fuel type) when volume remains constant. The above method is accurate enough to be suitable for normal use and do account for variables in ship’s indicator system.

8-249.1. Test/Adjust-Fuel Quantity system (AVIM).

WARNING

Do not use any fuel quantity tester other than the PSD60-1AF with this procedure.

WARNING

Never connect a fuel gauge or signal conditioner unit (SCU) to an electrically live connector.

WARNING

If a circuit breaker pops during calibration or troubleshooting, a short circuit is indicated. Correct fault before reapplying power.

WARNING

Use only authorized test equipment to test troubleshoot, and calibrate the fuel quantity system. Shop testers, including multimeters and meg/ohmmeters, are not certified safe for use on any wiring to the fuel tank.

NOTE

The fuel quantity system operational check can be used in either of two ways. The preferred method shall be used when the fuel tanks can be drained. The alternate method will be used when conditions do not allow fuel tanks to be drained i.e. combat/mobilization. Though the alternate method Is Considered adequate it is possible for residue to be trapped In the probe area which could Indicate a false quantity.

a. Capacitance Test Using Tester (T68.1) and "T" cable (T68.2) Preferred Method Empty Tanks.

(5) Ground aircraft to earth ground.

(2) Completely drain sump and fuel tank(s) to be calibrated.

(3) Verify that inverter which powers fuel quantity indicator is turned off.

WARNING

Always ground the tester to a good, clean aircraft ground. Do not connect ground wire behind circuit breaker panels or near any exposed power termination.

(4) Connect tester chassis jack (J-7, figure 8-7.1) to airframe ground using ground lead supplied with tester.

(5) Lift to unlock tester ON-OFF switch and turn to “ON” position. If words “LO BATT” appear in upper left-hand corner of LCD display (D-3) replace batteries in tester.

(6) Allow tester to warm up for at least 3 minutes before using.

(7) Connect “T” cable (figure 8-7.1) “LOZ”, “HIZ”, and “Comp” leads to TANK UNITS terminals (J-4, J-5, and J-6 figure 8-7.1) respectively on tester.

(8) Rotate tester FUNCT switch (S-2) to “MEASURE EXT” position.

(9) Rotate tester SELECT switch (S-3) to “TU” POSITION.

(10) Switch TANK IN/OUT switch on “T” cable to the “IN” position.

NOTE

Worksheet figure 8-7.3 is to be locally reproduced.

(11) Read capacitance of “TU” test leads. If reading is over .5 pf, repair or replace cable. Record capacitance on worksheet, line 1.

(12) Rotate SELECT switch (S-3, figure 8-7.1) to “COMP” position. Read capacitance of COMP leads. If reading is over .5 pf, repair or replace cable. Record capacitance on worksheet, line 2.

(13) Loosen clamp holding fuel quantity gauge in instrument panel and remove gauge from panel.

CAUTION

When disconnecting aircraft wiring cable from indicator hold cable to prevent retraction behind instrument panel.

(14) Disconnect aircraft wiring cable from fuel quantity gauge.

(15) Connect (J-1) of “T” cable to aircraft wiring connector removed from gauge. Do not connect to gauge.

NOTE

Rotate select switch (S3, figure 8-7.1) to “TU” position.

(16) Read capacitance of empty tank plus caable and record on worksheet line 3.

(17) Subtract capacitance of cable measured in step 11. Capacitance must be between 107.5 pf and 111.5 pf.

NOTE

If tank capacitance is out of tolerance, check for trapped fuel at fuel drain.

(18) The tank unit capacitance should be as shown below:

Consolidated Airborne	or Simmonds	Capacitance
PAA933	-391046-145	67.9 ±.7 pf
PAA424	-391019-001	25.7 ±.5 pf
PAB934	-391020-001	15.9 ±.5 pf
(Compensator)		25.0 ±.5 pf

(19) Rotate SELECT switch (S-3) on tester to “COMP” position. Read capacitance of compensator plus cable capacitance on tester LCD. Record on worksheet line 4.

(20) Subtract cable capacitance measured in step (12) above from reading in step 19. Compensator capacitance must be between 24.3 pf and 25.7 pf. Record COMP capacitance on worksheet line 5.

(21) Rotate SELECT switch (S-3) on tester to “LOZ-HIZ” position.

NOTE

The PSD60-1AF tester reads "over-range" above 10,000 megohms by flashing three colons and displaying four zeros

(22) Verify that the tester LCD reads over 20 megohms in "LOZ-HIZ" position. Record reading on line 7 of worksheet.

(23) Rotate SELECT switch (S-3) to the following positions and verify that the tester LCD reads over 1 megohm in each position:

"LOZ-SHLD" "LOZ-GND"
"HIZ-SHLD" "HIZ-GND"

Record readings on line 8 of worksheet.

(24) Rotate SELECT switch (S-3) to "SHLD-GND" position. Verify that LCD read-out indicates O megohms.

(25) Disconnect "T" cable leads from tester TANK UNITS terminals and connect to INDICATOR "LOZ", "HIZ" and "COMP" terminals respectively.

(26) Rotate tester FUNCT switch (S-2) to "MEASURE INT" position.

(27) Rotate SELECT switch (S-3) to the "COMP" position.

(28) Set COMP simulator decade (D-2) to read W.

(29) Adjust COMP vernier (V-2) to read 26.9 pf on tester LCD display.

(30) Rotate SELECT switch (S-3) to "TU" position.

(31) Set TU simulator decade (D-1) to read "011".

(32) Adjust TU vernier (V-1) to read 130.2 pf on tester LCD display.

(33) Rotate FUNCT switch (S-2) to "AIR-CRAFT ONLY" position.

(34) Connect "T" cable (P-1) to fuel quantity indicator.

(36) Turn on inverter to power indicator.

WARNING

If a circuit breaker pops during calibration or troubleshooting, a short circuit is indicated. Correct fault before reapplying power.

(36) Press and release indicator test switch on instrument panel.

(37) Adjust "E" trimmer at lower left (viewed from front of gauge) until pointer reads 0 lb.

(36) Repeat steps 36 and 37 above until pointer returns to O lb.

(39) Rotate FUNCT switch (S-2) on tester to "SIM TU & COMP" position.

(40) Adjust "F" trimmer at lower right (viewed from front of gauge) until pointer reads 1575 lb.

(41) Press and release indicator test switch on instrument panel.

(42) Repeat steps 40 end 41 until pointer returns 1575 lb.

(43) Repeat steps 32 through 36 above.

(44) Turn inverter off.

(45) Disconnect "T" cable from gauge and from aircraft wiring.

(46) Reconnect indicator to aircraft wiring and reinstall in panel.

b. Capacitance Test Using Tester (T68.1) and "T" cable (T68.2) Alternate Method Fuel In Tanks.

(1) Ground aircraft to earth ground.

(2) Verify that inverter which powers fuel quantity indicator is turned off.

WARNING

Always ground the tester to a good, clean aircraft ground. Do not conned ground wire behind circuit breaker panels or near any exposed power termination.

(3) Connect tester chassis jack (J-7, figure 8-7.1) to airframe ground using ground lead supplied with tester.

(4) Lift to unlock tester ON-OFF switch and turn to "ON" position. If words "LO BATT" appear in upper left-hand comer of LCD display (D-3) replace batteries in tester.

(5) Allow tester to warmup for at least 3 minutes before using.

(6) Connect “T” cable (figure 8-7.2) "LOZ", "HIZ", and “Comp" leads to TANK UNITS terninals (J-4, J-5, and J-6, figure 8-7.1) respectively on tester.

(7) Rotate tester FUNCT switch (S-2) to “MEASURE EXT" position.

(8) Rotate tester SELECT switch (S-3) to "TU" POSITION.

(9) Switch TANK IN/OUT switch on "T" cable to the “IN” position.

NOTE

Worl sheet figure 8-7.3 is to be locally reproduced.

(10) Read capacitance of "TU" test leads. If reading is over .5 pf, repairer replace cable. Record capacitance on worksheet line 1.

(11) Rotate SELECT switch (S-3, figure 8-7.1) to “COMP” position. Read capacitance of COMP leads. If reading is over .5 pf, repair or replace cable. Record capacitance on worksheet, line 2.

(12) Loosen clamp holding fuel quantity gauge in instrument panel and remove gauge from panel.

CAUTION

When disconnecting aircraft wiring cable from indicator hold cable to prevent retraction behind instrument panel.

(13) Disconnect aircraft wiring cable from fuel quantity gauge.

(14) Connect (J-1) of "T" cable to aircraft wiring connector removed from gauge. Do not conned to gauge.

(15) Rotate SELECT switch (S-3) on tester to “LOZ-HIZ” position.

NOTE

The PSD60-1AF tester reads “overrange” shove 10,000 megohms by flashing three colons and displaying four zeros.

(16) Verify that the tester LCD reads over 20 megohms in "LOZ-HIZ" position. Record readings on tine 3 of worksheet.

(17) Rotate SELECT switch (S-3) to the following positions and verify that the tester LCD reads over 1 megohm in each position:

“LOZ-SHLD”	“LOZ-GND"
“HIZ-SHLD”	"HIZ-GND"

Record readings on line 4 of worksheet.

(18) Rotate SELECT switch (S-3) to "SHLD-GND” position. Verify that LCD read-out indicates 0 megohms.

(19) Disconnect "T" cable leads from tester TANK UNITS terminals and connect to INDICATOR "LOZ”, ‘HIZ” and “COMP" terminals respectively.

(20) Rotate tester FUNCT switch (S-2) to "MEASURE INT" position.

(21) Rotate SELECT switch (S-3) to the “COMP position.

(22) Set COMP simulator decade (D-2) to read "03".

(23) Adjust COMP vernier (V-2) to read 51.9 pf on tester LCD display.

(24) Rotate SELECT switch (S-3) to "TU" position.

(25) Set TU simulator decade (D-1) to read “008”.

(26) Adjust TU vernier (V-1) to read 109.5 pf on tester LCD display.

(27) Rotate FUNCT switch (S-2) to “SIM TU & COMP” position.

(28) Connect "T" cable (P-1) to fuel quantity indicator.

(29) Switch the TANK IN/OUT switch on the interface cable to the "OUT" position.

(30) Turn on inverter to power indicator.

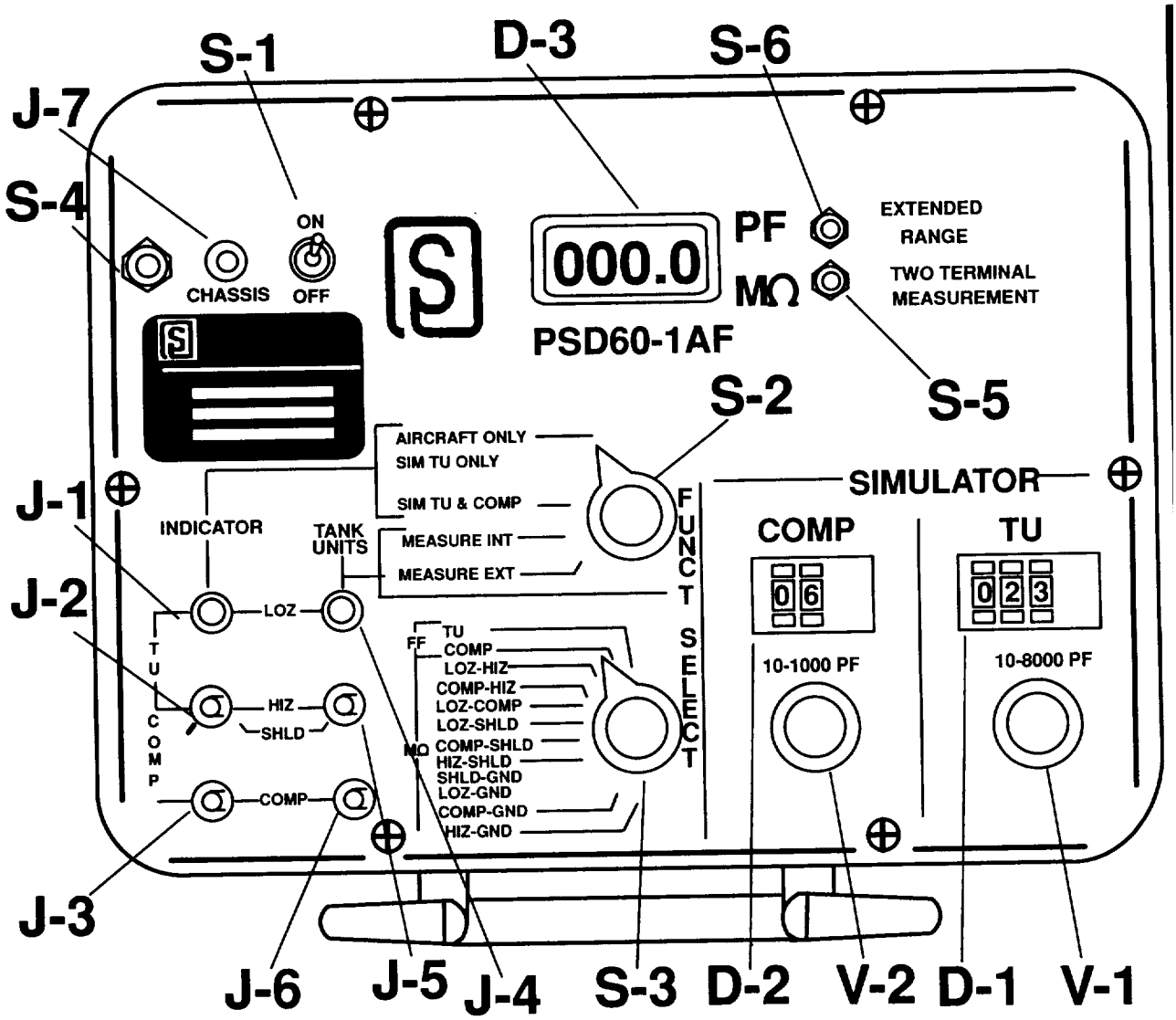

J-1 LoZ output to indicator
J-2 HiZ output to indicator
J-3 Comp LoZ out to indicator
J-4 Tank Unit Loz input
J-5 Tank Unit HiZ input
J-6 Tank Unit Comp input
J-7 Airframe ground jack
D-1 Tank Unit simulator decade
D-2 Compressor sim decade
D-3 Liquid Crystal Display (LCD)

S-1 Power ON-OFF switch
S-2 Function select switch
S-3 Cap-Meg select switch
S-4 Lid-close power OFF sw
S-5 Press for 2-terminal megger readings
S-6 X-10 range switch
V-1 TU simulator vernier
V-2 TU simulator vernier

Figure 8-7.1 Fuel Quantity Test Set P/N PSD60-1 AF

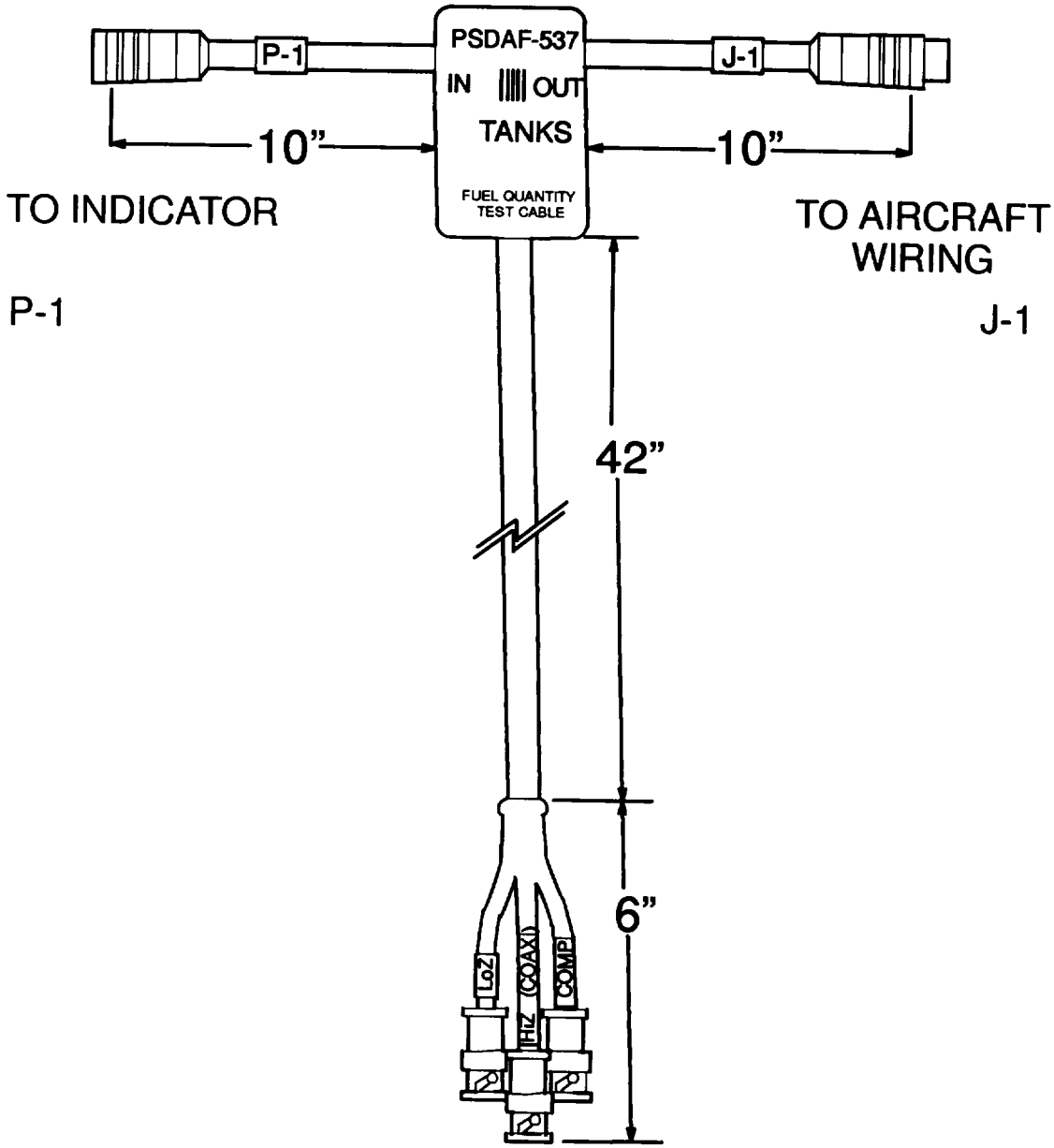

Figure 6-7.2 Fuel Quantity "T" Cable P/N PSDAF-537

	PERFERRED (DRY TANK) METHOD	_____ meg
1.	Measure capacitance of cable TU leads	_____ pf
2.	Measure capacitance of cable compensator leads	_____ pf
3.	Measure capacitance of empty tank plus TU leads	_____ pf
4.	Measure capacitance of compensator plus COMP leads	_____ pf
5.	Subtract line 1 from 3 above. Empty tank compacitance = (107.5 pf - 111.5 pf)	_____ pf
6.	Subtract line 2 from 4 above. Empty COMP capacitance = (24.3 pf - 25.7 pf)	_____ pf
7.	Measure LOZ-HIZ insulation resistance. Must exceed 20 meg	_____ meg
8.	Measure insulation resistance of: Must exceed 1 Meg	_____ meg
	LOZ-SHLD	_____ meg
	LOZ-GND	_____ meg
	HIZ-SHLD	_____ meg
	HIZ-GND	_____ meg
9.	Measure insulation resistance SHLD-GND. Must read 0 meg.	_____ meg
10.	Select AIRCRAFT ONLY and adjust "E" for 0 lbs.	_____ lb
11.	Select SIM TU & COMP and adjust "F" for 1575 lb.	_____ lb
12.	Select AIRCRAFT ONLY and readjust "E" for 0 lb.	_____ lb
	ALTERNATE (FUEL IN TANK) METHOD	
1.	Measure capacitance of cable TU leads.	_____ pf
2.	Measure capacitance of cable COMP leads.	_____ pf
3.	Measure LOZ-HIZ insulation resistance. Must exceed 20 meg	_____ meg
4.	Measure insulation resistance of: Must exceed 1 meg	
	LOZ-SHLD	_____ meg
	LOZ-GND	_____ meg
	HIZ-SHLD	_____ meg
	HIZ-GND	_____ meg
5.	Measure insulation resistance SHLD-GND. Must read 0 meg	_____ meg
6.	Adjust COMP simulator for 51.9 pf. Adjust TU simulator for 109.5 pf. Select SIM TU & COMP. Adjust "E" trimmer for 0 lb.	_____ lb
7.	Adjust TU simulator for 239.7 pf. Select TU & COMP. Adjust "F" trimmer for 1575 lb.	_____ lb
8.	Adjust TU simulator for 109.5 pf. Adjust "E" trimmer for 0 lb.	_____ lb

NOTE: TO BE LOCALLY REPRODUCED

FIGURE 8-7.3 FUEL QUANTITY CALIBRATION WORKSHEET

WARNING

If a circuit breaker pops during calibration or troubleshooting, a short circuit is indicated. Connect fault before reapplying power.

(31) Press and release indicator test switch on instrument panel.

(32) Adjust “E” trimmer at lower left (viewed from front of gauge) until pointer reads 0 lb.

(33) Repeat steps 31 and 32 above until pointer returns to 0 lb.

(34) Rotate FUNCT switch (S-2) on tester to “MEASURE INT” position.

(35) Set TU simulator decade (D-1) to read “022”.

(38) AdjustTU vernier (V-1) to read 239.7 pf on tester LCD display.

(37) Rotate FUNCT switch (S-2) to "SIM TU & COMP" position.

(38) Adjust "F" trimmer at lower right (viewed from front of gauge) until pointer reads 1575 lb.

(39) Press and release indicator test switch on instrument panel.

(49) Repeat steps 38 and 39 until pointer returns to 1575 lb.

(41) Rotate FUNCT switch (S-2) on teeter to "MEASURE INT" position.

(42) Repeat steps 25 through 32 above.

(43) Turn inverter off.

(44) Disconnect "T" cable from gauge and from aircraft wiring.

(48) Reconnect indicator to aircraft wiring and reinstall in panel.

8-250. Repair or Replacement-Fuel Quantity Indicator. Refer to paragraph 8-6 for repair or replacement criteria.

8-251. Installation-Fuel Quantity Indicator. Refer to paragraph 8-7 for installation procedure.

NOTE

New fuel quantity indicators must be adjusted, refer to paragraph 8-249.c. when using Tester (T68) and paragraph 8-249.1 when using Tester (T68.1)

8-252. FUEL QUANTITY TRANSMITTERS.

8-253. Description-Fuel QuantityTransmitters. Three fuel quantity transmitter probes (tanks units) are installed, two in the forward right aide fuel cell and one in the aft center fuel cell. The probes act as sensors for the fuel quantity indicator (paragraph 8-243).

8-254. Removal-Fuel Quantity Transmitters

a. Defuel helicopter (Refer to Chapter 1.)

b. Remove section of cabin ftoor over right hand fuel cell.

c. Remove circular cover plate on top of forward right side fuel cell.

d. Remove fuel cell sump.

e. Detach upper and lower support clamps of each probe from threaded inserts of cell wall by removing bolt, washer and spacer from each damp.

f. Remove probes, with attached damps and electrical leads, from cell. Remove damps from probes.

g. Disconnect electrical leads and vent line from connectors on aft center fuel cell access door.

h. Detach access door by removing four retainers, eight bolts, washers, sixteen screws and washers.

i. Remove access door, tilting and turning as necessary to allow attached quantity probe and float switches to pass through access port. Cover exposed open port.

j. Disconnect probe electrical leads from connectors on door. Cut tie straps and remove probe from support dips.

8-255. Inspection-Fuel Quantity Transmitter.

a. inspect transmitter for security, corrosion, and cracks.

NOTE

Inspect transmitter for dents, scratches, gauges or indications of being dropped during handling. Replace if droppage is suspected.

b. Electrical leads are susceptible to chafing support bracket assemblies. Ensure that wires are in serviceable condition and are routed correctly to preclude a chafing condition.

8-256. Repair or Replacement-Fuel Quantity Transmitter. a. Reinstall improperly mounted transmitter.

b. Replace transmitter if cracked or damaged.

8-257. Installation-Fuel Quantity Transmitter. a. Assemble two clamps on each forward fuel cell transmitter probe.

b. Position each probe in forward right-hand well aligning upper and lower clamps to threaded inserts of cell wall. Secure each clamp with bolt, washer and spacer. On forward probe, also attach support clamp of ejector pump outlet hose on upper clamp bolt of probe.

c. Connect electrical leads of probes to connectors on sump plate while installing sump assembly.

d. Install cover plate on fuel cell using a new packing and screws.

e. Install cabin floor panel.

f. Install aft center fuel cell transmitter probe with large end up in clips on access door brackets. Secure with teflon locking tie straps.

g. Connect electrical leads to connectors on access door.

h. Place new packing in groove around access port. Tilt and turn access door as necessary to pass quantity probe and float switches through port into cell. Align door and secure with sixteen screws and washers, and four retainers with eight bolts and washers. Torque bolts and screws 40 TO 60 inch-pounds.

i. Connect fuel control vent line to check valve on floor. Connect electrical leads to terminal block and quantity gage connectors.

8-256. TRANSMISSION OIL PRESSURE INDICATING SYSTEM.

8-259. Description-Transmission Oil Pressure Indicating System. The transmission oil pressure indicating system consists of the transmission oil pressure transmitter (paragraph 8-269) and indicator (paragraph 8-260)

8-260. TRANSMISSION OIL PRESSURE INDICATOR.

8-261. Description-Transmission Oil Pressure Indicator. The transmission oil pressure indicator provides continuous readings in psi by means of an electrical transmitter (paragraph 8-269) mounted directly into an oil manifold at right aft on transmission top case electrical circuit is operated by 28 Vac power

8-262. Cleaning Transmission Oil Pressure Indicator. Refer to paragraph 8-3 for cleaning procedure.

8-263. inspection-Transmission Oil Pressure Indicator. Refer to paragraph 8-4 for inspection procedure.

8-264. Functional Test—Transmission Oil Pressure Indicator. Refer to paragraph 8-64. except, close XMSN OIL PRESS circuit breaker.

8-265. Troubleshooting-Transmission Oil Pressure Indicator. Refer to paragraph 8-65 for troubleshooting; procedure is the same.

8-266. Removal—Transmission Oil Pressure Indicator. Refer to paragraph 8-5 for removal procedure.

8-267. Repair or Replacement—Transmission Oil Pressure Indicator. Refer to paragraph 8-6 for repair or replacement criteria.

8-268. Installation-Transmission Oil Pressure Indicator. Align transmission oil pressure indicator so that 50 psi is at 9 o'clock position. Refer to paragraph 8-7 for installation procedures.

8-269. TRANSMISSION OIL PRESSURE TRANSMITTER.

8-270. Description— Transmission Oil Pressure Transmitter. The transmission oil pressure transmitter, located on the right side of the transmission, monitors transmission oil pressure and transmits voltage signals to the transmission oil pressure indicator.

8-271. Cleaning — Transmission Oil Pressure Transmitter. Refer to paragraph 8-71 for cleaning; procedure is the same.

8-272. Inspection — Transmission Oil Pressure Transmitter. Refer to paragraph 8-72 for inspection; procedure is the same.

8-273. Functional Test — Transmission Oil Pressure Transmitter. Refer to paragraph 8-73 for functional test; procedure is the same.

8-274. Troubleshooting — Transmission Oil Pressure Transmitter. Refer to paragraph 8-65 for troubleshooting.

8-275. Removal — Transmission Oil Pressure Transmitter. Refer to paragraph 8-75 for removal; procedure is the same.

8-276. Repair and Replacement — Transmission Oil Pressure Transmitter. Refer to paragraph 8-76 for repair and replacement; criteria is the same.

8-277. Installation — Transmission Oil Pressure Transmitter. Refer to paragraph 8-77 for installation; procedure is the same.

8-278. TRANSMISSION OIL TEMPERATURE INDICATING SYSTEM.

8-279. Description — Transmission Oil Temperature Indicating System. The transmission oil temperature indicating system consists of the transmission oil temperature indicator and an electrical resistance type thermobulb. The system is powered from the 28 Vdc essential bus, and is protected by a 5 ampere ENG & XMSN TEMP IND circuit breaker.

8-280. TRANSMISSION OIL TEMPERATURE INDICATOR.

8-281. Description — Transmission Oil Temperature Indicator. The transmission oil temperature indicator, located on the instrument panel, indicates transmission oil temperature in degrees Celsius by means of an electrical resistance type temperature bulb.

8-282. Cleaning – Transmission Oil Temperature Indicator. Refer to paragraph 8-3 for cleaning procedure.

8-283. Inspection — Transmission Oil Temperature Indicator. Refer to paragraph 8-4 for inspection procedure.

8-284. Functional and Bench Test — Transmission Oil Temperature Indicator. Refer to paragraphs 8-84 and 8-88 for functional and bench test; procedure is the same.

8-285. Troubleshooting — Transmission Oil Temperature Indicator. Refer to paragraph 8-85 for troubleshooting.

8-286. Removal — Transmission Oil Temperature Indicator. Refer to paragraph 8-5 for removal procedure.

8-287. Repair and Replacement — Transmission Oil Temperature Indicator. Refer to paragraph 8-6 for repair and replacement criteria.

8-288. Installation — Transmission Oil Temperature Indicator. A!ign transmission oil temperature indicator so that 75° C is at 9 o'clock position. Refer to paragraph 8-7 for installation procedure.

8-289. TRANSMISSION OIL TEMPERATURE BULB.

8-290. Description — Transmission Oil Temperature Bulb. The transmission oil temperature bulb, installed in the transmission oil manifold, monitors transmission oil temperature and transmits voltage signals to the transmission oil temperature indicator.

8-291. Cleaning –- Transmission Oil Temperature Bulb. Refer to paragraph 8-92 for cleaning; procedure is the same.

8-292. Inspection - Transmission Oil Temperature Bulb. Refer to paragraph 8-93 for inspection; procedure is the same.

8-293. Troubleshooting - Transmission Oil Temperature Bulb. Refer to paragraph 8-85 for troubleshooting.

8-294. Removal - Transmission Oil Temperature Bulb. Refer to paragraph 8-95 for removal; procedure is the same.

8-295. Repair and Replacement - Transmission Oil Temperature Bulb. Refer to paragraph 8-96 for repair and replacement; criteria is the same.

8-296. Bench Test - Transmission Oil Temperature Bulb. Refer to paragraph 8-97 for bench test; procedure is the same.

8-297. Installation - Transmission Oil Temperature Bulb. Refer to paragraph 8-98 for installation; procedure is the same.

8-298. DELETED.

8-299. DELETED.

8-299.1. DELETED.

8-300. DC VOLTMETER.

8-301. Description - DC Voltmeter. A dc voltmeter is provided to indicate the voltage of the main generator, standby generator, essential bus, nonessential bus, or battery. These sources are selected by the VM selector on the dc power panel in the overhead console. The dc voltmeter is functionally tested as part of the Direct Current Power Distribution System (paragraphs 9-58 and 9-59). Refer to paragraphs 8-3 through 8-7 for maintenance procedures.

8-301.1 DELETED.

8-302. Troubleshooting - DC Voltmeter. Use table 8-17 and perform checks as necessary to isolate trouble. (See figure F-18).

NOTE

Before using this table, be sure all normal operational checks have been performed.

Table 8-17. Troubleshooting DC Voltmeter

CONDITION	TEST OR INSPECTION	CORRECTIVE ACTION
1. No reading or erratic reading on dc voltmeter.	STEP 1. Check for open or short circuit in voltmeter.	**Replace voltmeter if defective (paragraph 8-1).**
	STEP 2. Determine if mechanism in instrument is worn or dirty.	**Replace voltmeter if defective (paragraph 8-1).**

8-303. LOADMETER.

8-304. Description - Loadmeter. Two dc loadmeters are provided for main and standby dc generators to indicate output or load of each generator as a percent of total capacity. The dc loadmeter is functionally tested as a part of Direct Current Distribution System (paragraphs 9-58 and 9-59). Refer to paragraphs 8-3 through 8-7 for maintenance procedures.

8-304.1. DELETED

8-305. FREE AIR TEMPERATURE GAGE.

8-306. Description - Free Air Temperature Gage. The free air temperature gage is a bimetallic, probe type thermometer mounted on the upper left side of the pilots windshields. The probe portion is exposed to outside temperature through a rubber grommet mounted on the skin of the helicopter. The indicator is calibrated in degrees Celsius.

8-307. Cleaning - Free Air Temperature Gage. Refer to paragraph 8-3 for cleaning procedure.

8-308. Inspection - Free Air Temperature Gage.

a. Inspect assembly for corrosion.

b. Inspect for discoloration.

c. Inspect for leaking seal.

d. Check for proper temperature indication.

8-309. Functional Test - Free Air Temperature Gage. Refer to TM 1-1500-204-23-4.

8-310. Troubleshooting - Free Air Temperature Gage. Use table 8-18 and perform necessary checks to isolate trouble.

NOTE

Before using this table, be sure all normal operational checks have been performed.

Table 8-18. Troubleshooting Free Air Temperature Gage

CONDITION

TEST OR INSPECTION

CORRECTIVE ACTION

1. Gage indicating upscale of range.

STEP 1. Check for missing or improperly installed sunshie!d

Install missing or reinstall improperly mounted sunshield.

STEP 2. Determine if gage is defective.

Replace gage if defective (paragraph 8-1).

2. Gage indicating downscale of range.

STEP 1. Determine if gage is defective.

Replace gage if defective (paragraph 8-1).

8-311. Removal - Free Air Temperature Gage.

a. Unscrew and remove sunshield dished washer, and one case washer from outer end of thermometer.

b. Remove thermometer and other case washer from inside of pilots compartment.

8-312. Repair or Replacement - Free Air Temperature Gage. Replace gage if any of the inspection requirements are not met (paragraph 8-308).

8-313. Installation - Free Air Temperature Gage.

a. Test new gage. (Refer to TM 1-1500-204-23-4).

b. Hold washers and thermometer case in position at mounting flange.

c. Insert probe through grommet and mounting flange.

d. Place sunshield over thermometer probe and tighten.

8-314. RADAR WARNING INDICATING SYSTEM (AN/APR-39) (WHEN INSTALLED).

The radar warning system provides the pilot with both visual and audible warning when a high radar threat environment is encountered. The system (see figure 8-8) is effectively operated by use of a control panel located on the pilots right console and an indcator on the instrument panel. Refer to TM 11-1520-210-20 for description, operational check, troubleshooting, and maintenance of system components. Refer to paragraph 8-1 for instrument maintenance.

8-314.1. DELETED.

8-314.2. Countermeasures System, An/ALQ-144. (Provisions Only — When Installed). This jamming system (figure 8-10) provides a countermeasures function for certain threat environments. The system is effectively operated by use of a control panel located on the pilots console and an indicator on the master caution panel. Refer to TM 11-1520-210-20 for description, operational check, troubleshooting and maintenance of system components.

SECTION VI. INSTRUMENT PANELS

8-315. INSTRUMENT PANELS AND GLARESHIELD.

8-316. Description - Instrument Panel, Glareshield and Glareshield Extension (NVG) (Night Fix - Phase 1). The instrument panel is mounted on the top forward section of the pedestal and contains all instruments for the pilot and copilot. Instrument panel vibration may be eliminated or minimized by adjusting the tube and brace assemblies provided for this purpose. The tube assemblies are attached to the helicopter structure by means of a pin, washers, and cotter pin. They are equipped with a clevis and check nut for adjustment. The brace assemblies are attached to the pedestal and may be adjusted by turnbuckles incorporated in the brace assemblies. A glareshield is attached to the top edge of the instrument panel to reduce glare and improve instrument readability. On UH-1 helicopters modified for Night Vision Goggles (NVG) (Night Fix - Phase 1), a glareshield extension has been installed on the existing glareshield to accept NVG lighting.

8-317. Cleaning - Instrument Panel, Glareshield and Glareshield Extension (NYG) (Night Fix - Phase 1).

a. Remove moisture and loose dirt with a clean, soft cloth.

Warning

Dry cleaning solvent is flammable and its fumes are toxic. Provide adequate ventilation. Do not use near a flame.

b. Remove grease, fungus, and dirt with a clean, lint-free cloth dampened with dry cleaning solvent (C261).

8-318. Inspection - Instrument Panel, Glareshield and Glareshield Extension (NVG) (Night Fix - Phase 1).

a. Visually inspect panels for surface scratches, war-page, cracks, and loose mounting screws.

b. Inspect compass correction cards, placards, and decals for legibility.

c. Inspect brace assemblies for sagging, cracks, and permanent set.

d. Inspect rheostats and switches for missing and loose knobs.

e. Inspect glareshield and glareshield extension (if installed) for cracks or loose mounting.

8-319. Removal - Instrument Panel and Glareshield.

a. Ensure all electrical power is off.

b. Disconnect all electrical receptacles and hoses from instruments and glareshield.

c. Cover all receptacles and hoses to prevent entrance of foreign particles.

d. Cover openings on instruments.

d.1. Remove attaching hardware from glareshield and remove glareshield.

e. Remove pin, washers, and cotter pin securing each tube assembly.

f. Remove instrument panel from helicopter.

8-319.1. Removal - Glareshield (NVG) (Night Fix - Phase 1).

a. Remove attaching hardware from cockpit lights.

b. Remove attaching hardware from glareshield extension and remove extension from glareshield.

8-320. Repair or Replacement - Instrument Panel.

a. Repair cracks (Refer to TM 1-1500-204-23 series).

b. Replace brace assemblies if warped.

c. Replace loose or worn mounting screws.

8-320.1. Repair or Replacement - Glareshield and Glareshield Extension (NVG) (Night Fix - Phase 1).

a. Cracks less than two inches in length maybe repaired with epoxy (C29). Cracks in excess of two inches shall be cause for replacement.

b. If necessary, reprint repaired area with paint (C145).

c. If rubber channel on NVG extension is loose or missing, rebound with adhesive (C22) or replace.

8-321. Installation - Instrument Panel, Glareshield and Glareshield Extension (NVG) (Night Fix - Phase 1).

a. Ensure all electrical power is off.

b. Install brace assemblies if removed.

e. Position panel in place on console and install mounting hardware.

d. Connect electrical receptacles to instruments.

e. Apply silicone compound (C250) to threads of pitot-static fittings.

f. Connect nylon fittings. Torque coupling nuts fingertight.

g. If NVG extension was removed, reinstall on giareshield. Install cockpit lights on extension.

h. Reinstall glareshield on instrument panel.

i. Reconnect all electrical wires.

Page 8-54, including Figure 8-9 have been deleted.

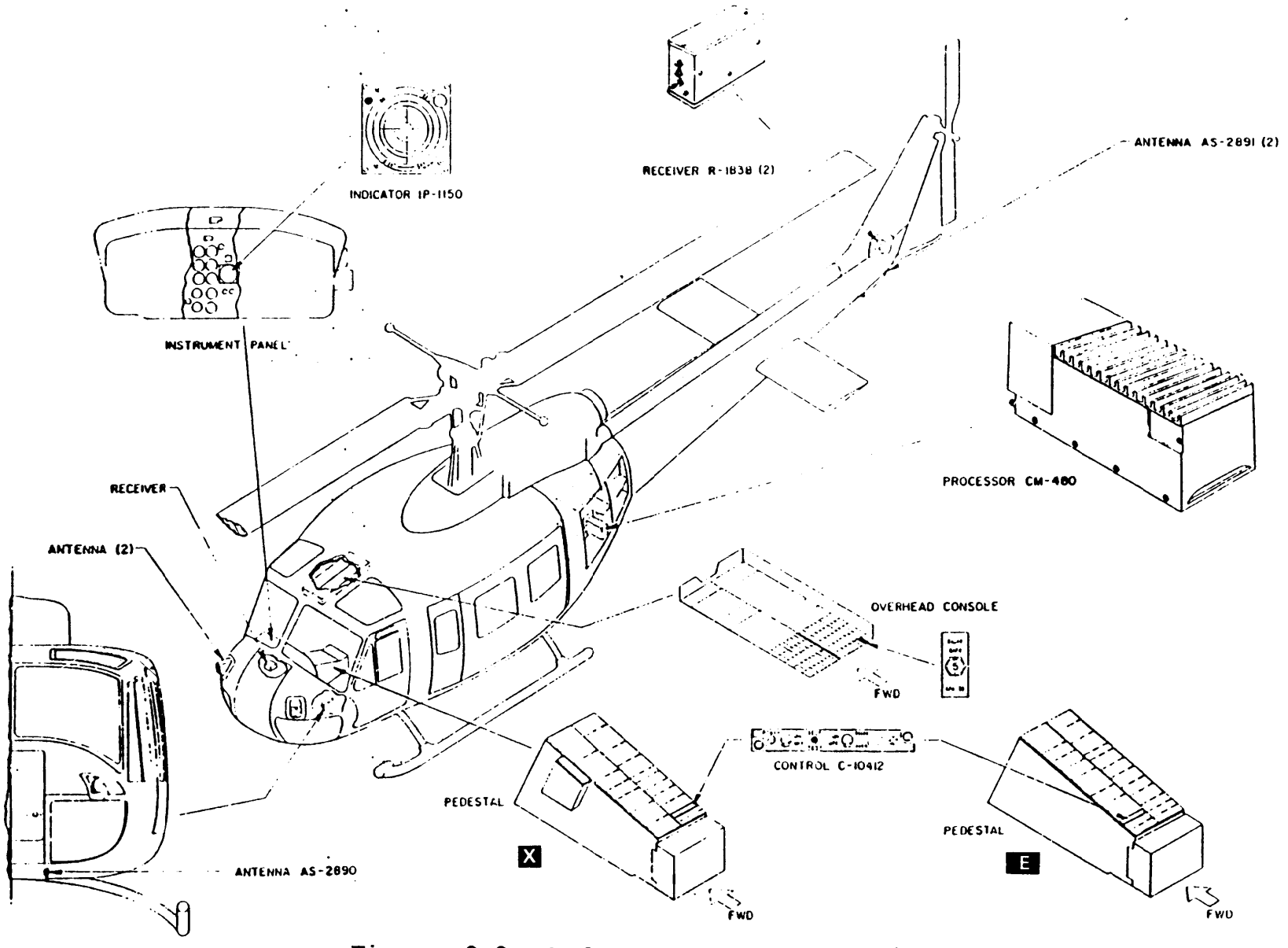

Figure 8-8. Radar Warning System AN/APR-39

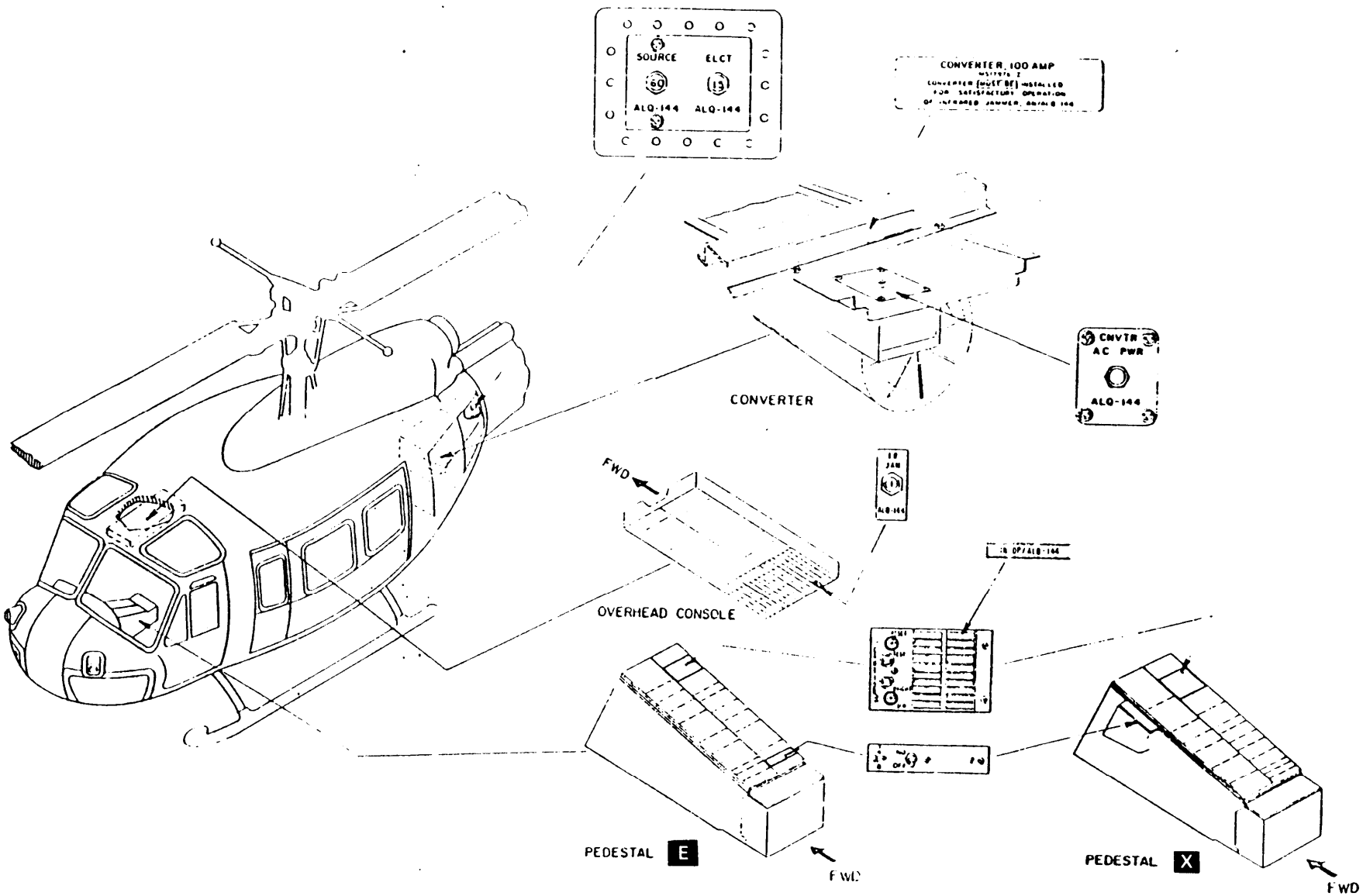

Figure 8-10. Radar Countermeasures System AN/ALQ-144

CHAPTER 9

ELECTRICAL SYSTEMS

SECTION I. DIRECT CURRENT POWER DISTRIBUTION SYSTEM

NOTE

Power loading charts and detail system wiring diagrams are contained in Appendix F. Aviation Unit Maintenance activities shall request AVIM for electrical system repairs in accordance with the Maintenance Allocation Chart, Appendix B.

9-1. DIRECT CURRENT POWER DISTRIBUTION SYSTEM.

9-2. Description - Direct Current Power Distribution System. The direct current power distribution system provides all basic power for operation of electrical components installed in the helicopter and consists of the main and standby generators, battery, external power, and dc bus systems.

The primary electrical power is supplied by the transmission driven 30 volt, 300 ampere main generator (G2). In the event of main generator failure, emergency dc power is supplied by the engine driven, 30 volt, 300 ampere standby starter-generator (G6). If both generators fail, power is supplied by the 24 volt, 34 ampere/hour battery which also furnishes starting power.

Primary power is distributed by a dual-bus arrangement, so that nonessential dc loads are automatically de-energized in the event of main generator failure. A bus-reset feature is provided to permit reactivation of these loads at the pilots discretion.

9-2.1. DELETED.

9-3. COMMON ELECTRICAL COMPONENTS (DC).

9-4. Description - Common Electrical Components (DC). Common electrical components include the miscellaneous electrical components (paragraph 9-5), circuit breakers (paragraph 9-12), and control panels (paragraph 9-19).

9-5. MISCELLANEOUS ELECTRICAL COMPONENTS.

9-6. Description - Miscellaneous Electrical Components. Capacitors, diodes, leads and wiring, panel lights, connectors, relays, rheostats, shock mounts, shunts and bus bars, switches, terminal boards, 5-volt instrument lighting circuitry, and transistors are included in this category.

9-7. Cleaning - Miscellaneous Electrical Components (General).

a. Remove moisture, dust, and loose dirt with a clean, soft cloth.

WARNING

Dry cleaning solvent is flammable and its fumes are toxic. Provide adequate ventilation. Do not use near a flame.

b. Remove grease, fungus, and dirt from the equipment cases and mountings; use a cloth dampened (not wet) with solvent (C261).

9-8. Inspection - Miscellaneous Electrical Components.

a. Inspect rheostats for security, corrosion, burned element, damaged wiper, cracks, and correct resistance.

b. Inspect switches for weak detents, security, corrosion, faulty operation and continuity in ON and infinity in OFF position.

c. Inspect plugs, connectors and receptacles for security, contact corrosion, damaged contacts, broken wires, faulty contacts, insert cracks, and faulty insulation.

d. Inspect leads and wiring for loose terminals, chafing, corrosion or deteriorated condition, faulty or damaged insulation, excessive mechanical stress, broken strands, damaged shielding, shorted shielding, routing and mounting conditions.

e. Inspect conduits for security, surface damage, cracks, dents, corrosion, and deterioration.

f. Inspect shunts and bus bars for corrosion, security, deep scratches, physical damage, deformity; and discoloration (indicating excessive overloading).

g. Inspect shockmounts for binding, compression, retention, security, cracks, distortion, and corroded bonding.

h. Inspect relays for loose connections, damaged or broken contact pins or terminals, damage to case or insulation between contact pins, and evidence of corrosion, pits, or discoloration (indicating arcing due to loose connections, internal shorting, or excessive overload).

i. Inspect terminal boards for cracks, corrosion, security, and damaged threads.

j. Inspect panel lights for faulty bulbs, security, and corrosion.

k. Visually check capacitors for loose connections, security of mounting, leaking dielectric, and apparent damage.

l. Visually check diodes for loose connection and broken leads. Check suspected faulty diode front to back conductivity ratio with standard ohmmeter.

m. Visually check transistor mount for security. Check suspected faulty transistor by voltmeter.

n. Inspect 5-volt power supplies for damage to case and evidence of corrosion, pits or discoloration. Inspect mounting hardware for retention and security. Inspect terminal board for loose terminals and security.

9-9. Removal - Miscellaneous Electrical Components.

WARNING

Before removing any electrical component, ensure all electrical power is off.

a. Remove attaching hardware, clamps, connectors or conductors; identify connectors and/or conductors.

b. Remove component.

9-10. Repair or Replacement - Miscellaneous Electrical Components.

a. Tighten loose terminal connectors, mounting and attachments of electrical components.

b. Replace miscellaneous electrical components that fail to meet inspection requirements.

c. Clean corrosion from connectors and receptacles with cleaner (C42).

9-11. Installation - Miscellaneous Electrical Components.

a. Install component and secure with attaching hardware or damps.

b. Attach identified terminals and/or connectors.

9-12. DC CIRCUIT BREAKERS.

9-13. Description - DC Circuit Breakers. The dc circuit breakers are mounted on the overhead console. Dc circuits can be opened or dosed by these circuit breakers.

9-14. Cleaning - DC Circuit Breakers (General). Refer to paragraph 9-7. Procedure is the same.

9-15. Inspection - DC Circuit Breakers. Inspect circuit breakers for reset retention, activation for circuit ON and power OFF, faulty operation, corrosion, and security.

9-16. Removal -DC Circuit Breakers.

a. Ensure all electrical power is OFF, Disconnect battery.

b. Disconnect wiring to appropriate circuit breaker and cover wire ends with electrical tape (C270).

c. Remove mounting hardware and lift circuit breaker from panel assembly.

9-17. Repair and Replacement - DC Circuit Breakers.

a. Repair is limited to tightening or porperly installing any loose or improperly installed mounting hardware and connectors.

b. Replace circuit breaker if any other inspection requirements are not met.

9-18. Installation -DC Circuit Breakers.

a. Position circuit breaker in panel assembly and install mounting hardware.

b. Remove cover from wire ends and connect to circuit breaker.

9-19. CONTROL PANELS.

9-20. Description - Control Panels. The control panels on the overhead console areas follows: DOME LT-PITOT, EXT LTS, CABIN HEATING, MISC, DC POWER, INST LTG, and AC POWER. The control panels on the pedestal are as follows: ENGINE, FORCE TRIM-HYD CONTROL, and CAUTION.

9-21. Cleaning - Control Panels. Refer to paragraph 9-7. Procedure is the same.

9-22. Inspection - Control Panels. Visually inspect for scratches, chipped edges, faulty edge light panels and bulbs, broken edge light panels, damaged or faulty switches, loose or damaged wiring and connectors, and broken or missing mounting fasteners.

9-23. Removal - Control Panels.

NOTE

The removal procedures for all electrical control panels are relatively the same. A single removal procedure may be used for any electrical control panel.

a. Ensure all electrical power is OFF.

b Disengage fasteners holding panel mounting.

c. Carefully lift panel from mount.

d. Disconnect electrical connector(s).

9-24. Repair and Replacement - Control Panels.

a. Repair any scratches or chipped edge light panels.

b. Replace any burned out or defective bulbs on edge light panels.

c. Replace control panel if any other inspection requirements are not met.

9-25. Installation - Control Panels.

a. Connect electrical connector(s).

b. Position panel in mount, being careful not to damage wiring. Engage fasteners.

c. Apply power and check components for proper operation.

9-26. BATTERY SYSTEM.

9-27. Description - Battery System.

a. The battery system is comprised of the battery (BT2), battery relays (K9 and K65), battery feeder relay (K66), and BAT switch (S40). The battery system is associated with the forward and aft BATT VM circuit breakers (CB6), forward and aft battery voltmeter terminal boards (TB60 and TB61), DC VM switch (S2), dc voltmeter (M2), nonessential bus relay (K2) and NON-ESS BUS switch (S62). The battery also furnishes power for the XMSN OIL LEVEL LT (125). See figure 9-1 for compartment location and figure 9-2 for equipment location.

b. On helicopters prior to S/N 65-9565, the battery circuit is activated by placing BATT SW (S40) to the ON position. Battery relay (K9) is energized and battery power is transferred through the contacts of battery relay (K9) to the main and essential dc buses.

c. On helicopters S/N 65-9565 and subsequent, an alternate battery location is provided in the aft fuselage compartment and the specific battery location depends on loading of mission equipment for proper weight and balance of the helicopter. If battery is installed in the nose compartment, placing BATT SW (S40) to ON position energizes battery relay (K9). Battery power is transferred through the contacts of battery relay (K9) to battery feeder relay (K66) and through contacts of battery feeder relay to the main and essential dc buses. If battery is installed in the aft fuselage compartment, placing BATT SW (S40) to ON position energizes battery relay (K65) and battery power is transferred through the contacts of battery relay (K65) to the main and essential dc buses.

d. The nonessential bus relay (K2) is energized when battery power is applied to the essential bus by placing the NON-ESS BUS switch (S62) to the MANUAL position. Battery power is then applied through the contacts of the nonessential bus relay to the nonessential bus.

e. The dc voltmeter (M2) monitors battery voltage when DC VM switch (S2) on dc power control panel (A1) is positioned to BAT and BAT VM circuit breaker (CB6) is closed. The battery voltage applied to the essential or nonessential bus may be monitored by placing the DC VM switch (S2) to ESS BUS or NON-ESS BUS position.

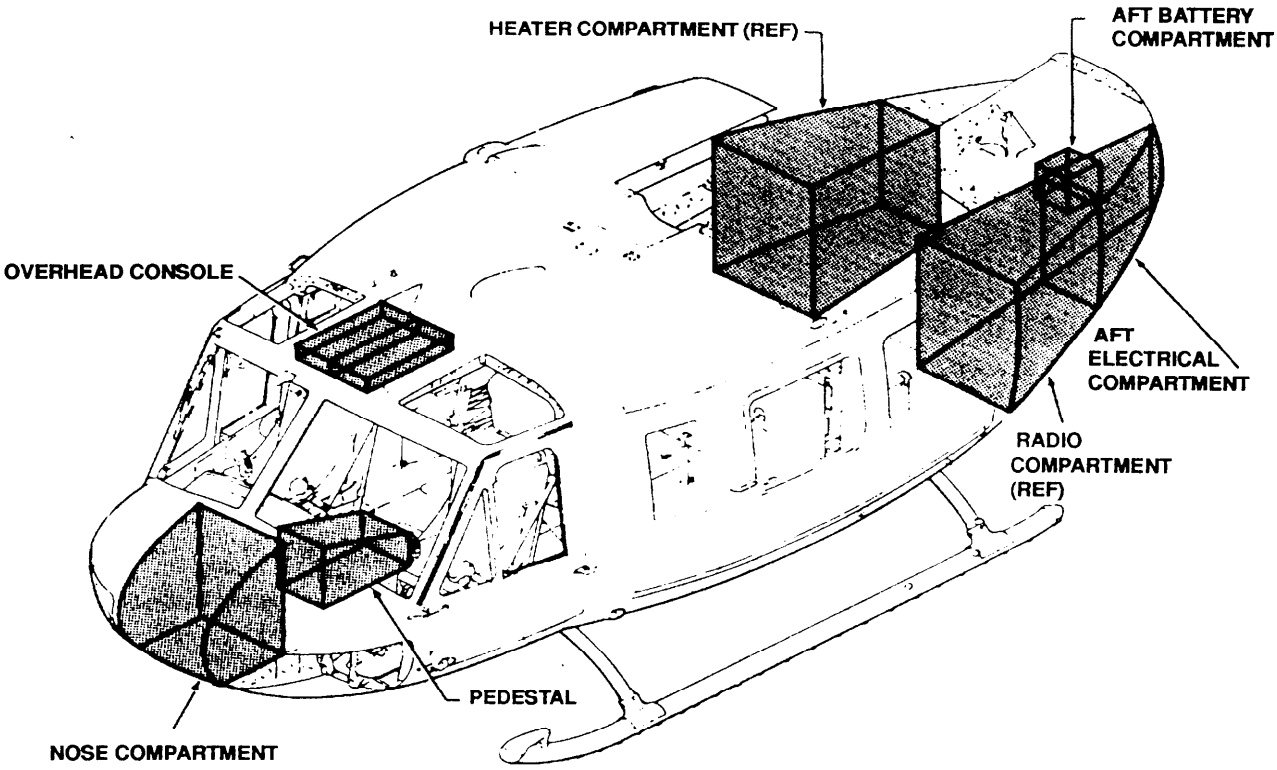

Figure 9-1. Compartment Location - Electrical

9-27.1. DELETED.

9-28. Functional Test - Battery System.

a. Before connecting the battery, check for correct polarity and tightness of the battery leads and terminations.

b. Open all circuit breakers and place all switches in the off position. Place NON-ESS bus switch to normal. Ensure that battery switch is OFF. Connect battery.

c. Close standby loadmeter circuit breaker, main generator voltmeter circuit breaker, battery relay circuit breaker, nonessential bus voltmeter circuit breaker, and the GEN and BUS reset circuit breaker, (these circuit breakers are located in electrical compartment and on the overhead console.)

NOTE

Unless otherwise specified, the voltmeter circuit breakers are to remain closed throughout the test.

d. Position DC VM switch (S2) to BAT and check that voltmeter indicates battery voltage.

e. Position DC VM switch (S2) to each remaining position. Voltmeter should indicate zero voltage.

f. Position DC VM switch (S2) to ESS BUS. Position BAT switch (S40) to ON. Check that voltmeter indicates battery voltage. Other positions, except BAT, should indicate zero.

g. Position nonessential bus switch (S62) to MANUAL ON and check that voltmeter indicates battery voltage for the NON ESS BUS, ESS BUS and BAT positions of the selector switch. Return switches to normal.

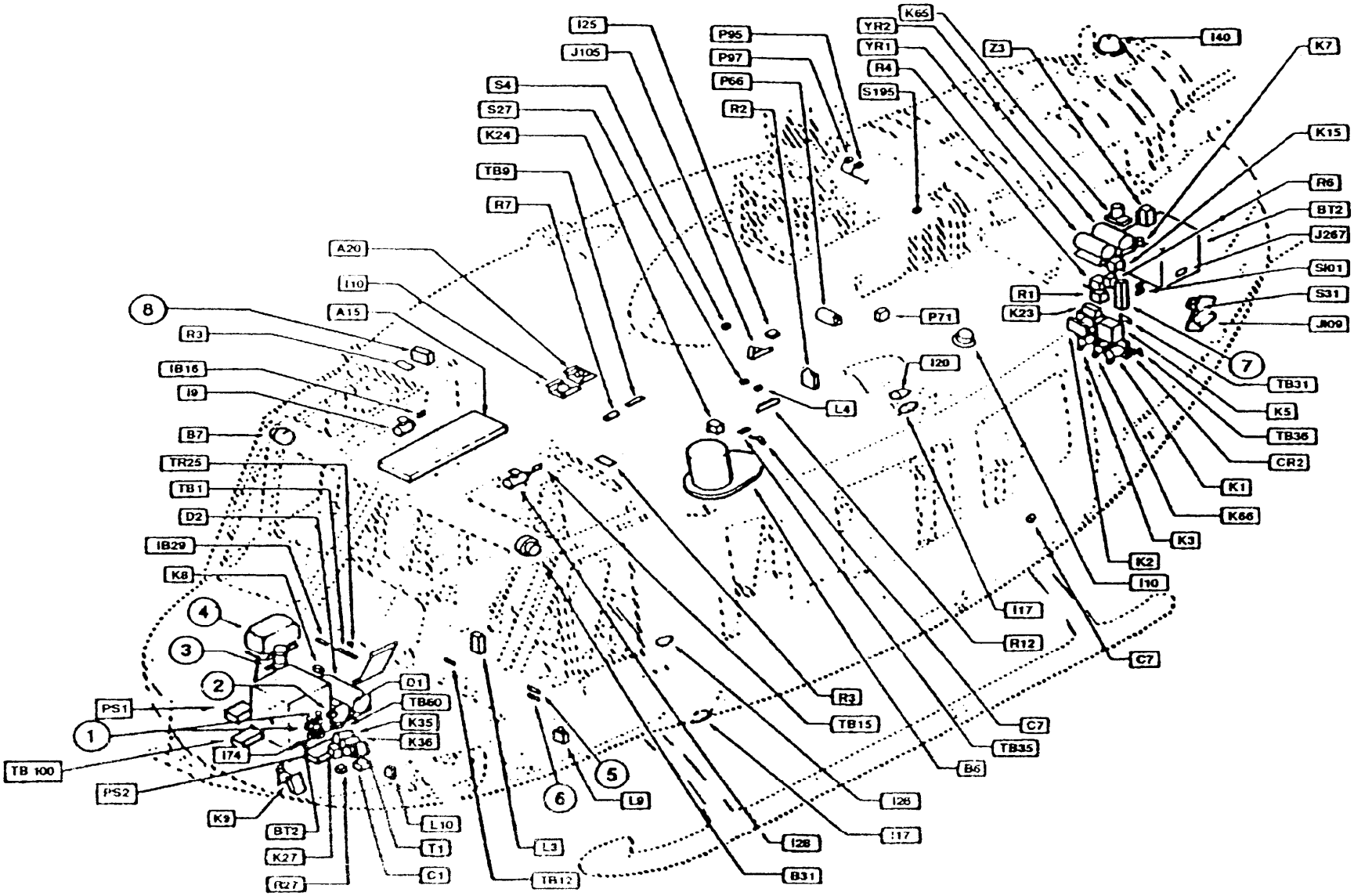

Figure 9-2. Electrical Equipment Location (Sheet 1 of 3)

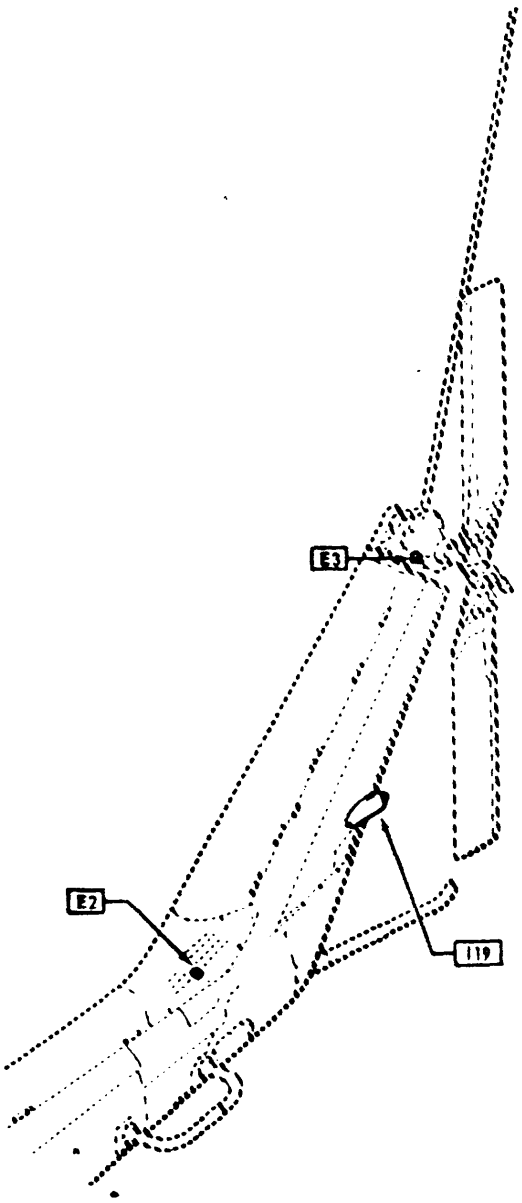

CODE ITEM	DESCRIPTION
A15	Overhead Console Panel
A20	Aft Dome Lights Panel
B6	Fuel Boost Pump Motor
B7	Windshield Wiper Motor – Pilot
B31	Windshield Wiper Motor – Copilot
BT2	Battery
C1	Capacitor, Power Factor Correction
C7	Capacitor, Noise Filter
CR2	Diode, External Power Relay
D1	Inverter – Main
D2	Inverter – Spare
E2	Magnetic Chip Detector – 42° Gearbox
E3	Magnetic Chip Detector – 90° Gearbox
I9	Utility Light – Pilot
I10	Dome Light
I17	Navigation Light – Left
I19	Tail Light
I20	Fuselage Light – Top
I25	Transmission Sump Inspection Light
I26	Fuselage Light – Bottom
I28	Utility Light – copilot
I40	Anti-Collision Light
J74	Receptacle, Battery Disconnect – Forward
J105	Receptacle, Heated Blanket – Left-Hand
J109	Receptacle, External Power
J267	Receptacle, Battery Disconnect – Aft
K1	Relay, External Power
K2	Relay, Nonessential Bus
K3	Relay, Starter
K4	Relay, Bus Control – Generator Fail
K5	Relay, Reverse Current – Main Generator
K5	Relay, Reverse Current – Main Generator
K7	Relay, Generator Field
K8	Relay, AC Failure
K9	Relay, Battery – Forward
K10	Relay, fuel Transfer
K15	Relay, Standby Generator Field
K23	Relay, Standby Generator Reverse Current
K24	Relay, Cargo Hook Release
K27	Relay, Inverter
K35	Relay, Main Inverter Power
K36	Relay, Spare Inverter Power
K65	Relay, Battery – Aft
K66	Relay, Battery Feeder

Figure 9-2. Electrical Equipment Location (Sheet 2 of 3)

CODE ITEM	DESCRIPTION
L4	Solonold, Hydraulic Bypass
L8	Magnetic Brake, Anti-Torque Force Trim
L9	Magnetic Brake, Fore & Aft Force Trim
L10	Magnetic Brake, Lateral Force Trim
P66	Plug, Fuel Pressure Mixture
P71	Plug, Fuel Valve Shut-Off
P95	Plug, Fire Detector Element - Left-Hand
P97	Plug, Fire Detector Element - Left-Hand
PSI	5-Volt Power Supply-Pilot (PS-274B)
PS2	5-Volt Power Supply-Copilot (PS-274B)
R1	Shunt-Ammeter - Standby Generator
R2	Shunt-Ammeter - Main Generator
R3	Resistor, Windshield Wiper
R7	Resister, Navigation Lights - Dim
R12	Resistor, Spool Thermocouple
R27	Resister, AC Load Balancing
S195	Engine Chip Detector
S4	Switch, Transmission Sump Inspection Light
S27	Switch, Hydraulic Pressure
S31	Switch, Limit-External Power Door
S101	Switch, Differential Pressure
T1	Transformer, 115/28 Volt
TB1	Terminal Board, Forward Instrument Panel
TB9	Terminal Board, Top and Dome Lights
TB12	Terminal Board, Pedestal Panel Edge Lights
TB15	Terminal Board, Cockpit Lights - Left-Hand

CODE ITEM	DESCRIPTION
TB16	Terminal Board, Cockpit Lights - Right-Hand
TB25	Terminal Board, Thermocouple-Indicator
TB29	Terminal Board, Instrument Ground
TB35	Terminal Board, Right-Hand Fuel Cell
TB36	Terminal Board, External Power Diode
TB39	Terminal Board, Electrical Compartment-Aft
TB60	Terminal board, Battery Voltage- Forward
TB100	Terminal board, 5-Volt Power Supply-Pilot and Copilot
VR1	Voltage Regulator-Main Generator
VR2	Voltage Regulator-Standby Generator
Z3	Flasher Unit, Navigation Lights
1.	Power Factor Correction Circuit Breakers
2.	Battery Voltmeter Circuit Breaker
3.	AM-3209( )/ASN Amplifier, Electronic Control
4.	Vertical Gyro - Type MD-1
5.	Junction Box - Upper, BJ-4-F
6.	Junction Box - Lower, BJ-4-A
7.	Circuit Breakers
a.	Main Generator Voltmeter
b.	Standby Generator Loadmeter Voltmeter
c.	Standby Generator Loadmeter
d.	Main Generator Field
8.	ODDS Power Module

Figure 9-2. Electrical Equipment Location (Sheet 3 of 3)

Pages 9-10 and 9-11, Including Figure 9-2.1, have been deleted.

REPLACE THIS PAGE FILE PAGE 46 of 50

C h a n g e 7 9 - 1 0

Figure 9-2.1 Deleted

Figure 9-2.1, Has been deleted.

h. Repeat steps e., f., and g. with the battery or 24 volt external power source connected to the power cables at the quick-disconnect in the aft battery location.

9-29. Troubleshooting - Battery System. Use Table 9-1 and perform checks as necessary to isolate trouble. In the following table, tripped circuit breakers are omitted from indications of trouble. Such trouble is usually easily detected and corrected. Broken wiring is always a probable cause of circuit malfunction or failure and has not been included (Figure F-18).

NOTE

Before you use this table, be sure you have performed all normal operational checks.

Table 9-1. Troubleshooting Battery System

CONDITION

TEST OR INSPECTION

CORRECTIVE ACTION

1. Dc voltmeter indicates zero volts with BAT VM circuit breaker closed and DC VM switch in BAT position.

STEP 1. Ensure that battery is installed and power is available. Check that battery voltage is present on both sides of BAT VM circuit breaker with a multimeter.

If voltage is present on battery side but not present on dc voltmeter side of circuit breaker, replace circuit breaker (paragraph 9-12).

STEP 2. Check for battery voltage at diode (CR30).

If voltage is present on battery side but no present on dc voltmeter side of diode, replace diode (paragraph 9-5).

STEP 3. Ensure that battery voltage is present at terminal 17 of DC VM switch (S2) and check for voltage on terminal 11.

If voltage is present on terminal 17 but not present on terminal 11, replace DC VM switch (paragraph 9-5).

STEP 4. Check for battery voltage across dc voltmeter (M2).

If battery voltage is present, replace dc voltmeter (paragraph 8-1).

2. DC voltmeter indicates zero volts with BAT switch (S40) ON, DC VM switch (S2) in ESS BUS, and GEN & BUS RESET circuit breaker closed. (Dc voltmeter indicates correct voltage with DC VM switch in BAT position.)

STEP 1. Check that battery voltage is present on 28 Vdc essential bus with a multimeter. (If voltage is not present on essential bus, continue with step 3.) Using a multimeter, determine if voltage is present across a GEN & BUS RESET circuit breaker.

Replace the GEN & BUS RESET circuit breaker if defective (paragraph 9-12).

STEP 2. Ensure that essential bus voltage is present on terminal 14 of DC VM switch (S2) and check for voltage at terminal 11.

Replace DC VM switch if voltage is not present at terminal 11 (paragraph 9-5).

STEP 3. CHECK that BAT switch (S40) completes ground circuit in ON position.

Replace BAT switch if defective (paragraph 9-9).

STEP 3.1. DELETED.

STEP 4. When battery is installed in aft battery compartment and battery voltage is present on terminal A1 of battery relay (K65), determine if battery relay (K65) is actuated by checking for battery voltage at terminal.

Table 9-1. Troubleshooting Battery System (Cont)

CONDITION

TEST OR INSPECTION

CORRECTIVE ACTION

A2. If relay is not actuated, determine that ground potential is present at terminal X2 and check for relay actuating voltage across terminals X1 and X2.

Replace relay if actuating voltage is present across terminals X1 and X2 and relay is not actuated (paragraph 9-5).

STEP 5. When battery is installed in nose compartment and battery voltage is present on terminal A2 of battery relay (K9), determine if battery relay (K9) is actuated by checking for battery voltage at terminal A1. If relay is not actuated, determine that ground potential is present at terminal X2 and check for relay actuating voltage across terminals X1 and X2.

Replace relay if actuating voltage is present across terminals X1 and X2 and relay is not actuated (paragraph 9-5).

STEP 6. With battery relay (K9) actuated and battery voltage present at terminal A2 of battery feeder relay (K66), determine if battery feeder relay is actuated by checking for battery voltage at terminal A1. If relay is not actuated, determine that ground potential is present at terminal X2 and check for relay actuating voltage across terminals X1 and X2.

Replace relay if actuating voltage is present across terminals X1 and X2 and relay is not actuated (paragraph 9-5).

3. Dc voltmeter indicates zero volts with BAT switch (S40) ON, DC VM switch (S2) in NON ESS BUS, NON-ESS BUS switch (S62) in MANUAL, and NON ESS BUS VM circuit breaker closed. (Dc voltmeter indicates correct voltage in BAT and ESS BUS positions.)

STEP 1. Check for battery voltage at 28 Vdc nonessential bus and NON ESS BUS VM circuit breaker. (If battery voltage is not present on 28 Vdc and nonessential bus, continue with step 3.)

Replace NON ESS BUS VM circuit breaker if defective (paragraph 9-5).

STEP 2. Ensure that nonessential bus voltage is present at terminal 13 of DC VM switch (S2) and check for voltage at terminal 11.

Replace DC VM switch if voltage is not present on terminal 11 (paragraph 9-5).

STEP 3. With battery voltage from main bus present on terminal A2 of nonessential bus relay (K2), determine if nonessential bus relay is actuated by checking for battery voltage at terminal A2. If relay is not actuated, determine that ground potential is present at terminal X1 and check for actuating voltage across terminals X1 and X2.

Replace relay if activating voltage is present across terminals X1 and X2 and relay is not actuated (paragraph 9-5).

Table 9-1. Troubleshooting Battery System (Cont)

CONDITION
TEST OR INSPECTION
CORRECTIVE ACTION

STEP 4. Check for battery voltage on center contact of nonessential;: bus switch (S62).

Replace nonessential bus switch If defective paragraph 9-).

4. Battery (BT 2) will not hold charge.

STEP 1. Determine if battery usage is too great

Use external power source whenever possible.

STEP 2. Check for too low charging rate.

Adjust voltage regulator (paragraph 9-75).

STEP 3. Perform a visual inspection for broken cell partitions.

Replace battery If cell partition is broken (paragraph 9-36).

STEP 4. Determine if battery cells are unbalanced.

Refer to TM 114140-203-23 for servicing of battery.

5. Battery life is short

Determine if electrolyte level is below top of plate.

Refer to TM 11-140-203-23 for servicing of battery.

6. Excessive loss of electrolyte.

STEP 1. Determine if charging rate is too high. (If loss is in individual cells only, call is faulty.)

Reduce charging rate (paragraph 9-75); replace battery (paragraph 9-36).

STEP 2. Inspect for cracked battery case.

Replace battery if battery case is defective (paragraph 9-46).

7. Battery Terminals corroded.

Check for excessive charging or discharging rate.

Clean terminals (paragraph 9-32) and adjust charging rate or load (paragraph 9-75).

8. Polarity is reversed.

Determine if battery connections are reversed.

Reverse wiring connections if necessary.

9-30. BATTERY.

931. Description -Battery. The 24 Volt, 34 ampere-hour, nickel cadmium type battery is located in the nose compartment (See figure -1.) A battery shelf assembly is provided as an at alternate battery location n the aft fuselage compartment, accessible by a door on the right side. The battery shelf assembly is comprised of aft battery relay (K65), terminal board (TrB81), BATT VM circuit breaker, associated wiring, vent tubs, tie-down rods, etc. required, to install the battery in at fuselage compartment. (Refer to Chapter 2 for sheet metal repair of the battery shelf assembly.) Utilization of a specific battery location depends on loading of mission equipment for proper weight and balance of the helicopter. Each battery location is equipped with vent tubes, eyebolts for attaching tiedown rods, and a battery cable. The prime purpose for the battery is to start the engine at remote fields where external power is not available. If the battery is used to power inverters, use win be limited to a maximum of 5 minutes. After engine is started, the battery switch should remain on until the battery is fully recharged by the main generator. Refer to TM 1-6140-203-23 for maintenance instructions other than removal or installation.

CAUTION

Remove battery to heated area If helicopter is to remain at outside tiedown for a prolonged period at O' F (-18' C) or below.

9-32. Deleted.

9-33. Deleted.

9-34. Condition Check Battery. On the helicopter a charged battery can be determined only by moving the battery switch from ON to OFF and observing the effect on the generator loadmeter. If the change indicated is less than 5 amperes, the battery is considered adequately charged.

9-35. Deleted.

9-36. Removal Battery.

WARNING

DANGEROUS CHEMICALS ARE USED IN NICKEL-CADMIUM BATTERIES.

The electrolyte used in nickel-cadmium batteries contains potassium hydroxide (KOH), which Is a caustic chemical agent Serious and deep bums of body tissue will result if the electrolyte comes in contact with the eyes or any part of the body. Use rubber gloves, rubber apron, and protective eye covering when handling the battery. If accidental contact with the electrolyte is made, use ONLY clean water and Immediately (seconds count) flush contaminated areas. Continue Flushing with large quantities of clean water. Seek medical attention Immediately. Before removing or installing the battery, insure that the battery switch is off and the battery has cooled down if overheated. Removal or Installation of the battery connector while the battery is under load may result in explosion, electrical arcing, and possible severe bums to personnel.

WARNING

CO_2 has an acceptable fire extinguishing agent once a fire has developed. In no case should CO_2 be directed into a battery compartment to effect cooling or displace explosive gases. The static electricity generated by the discharge of the extinguishers could explode hydrogen/oxygen gases trapped in the battery compartment.

CAUTION

Take every possible step to keep the nickel-cadmium battery as far away as possible from the lead-acid type of battery. Do not use the same tools and materials (screwdriver, wrenches, gloves, apron, etc.) for both types of batteries. Anything associated with the lead-acid battery, even the air, must never come in contact with the nickel-cadmium battery or its electrolyte. Even a trace of sulphuric acid fumes from a lead-acid battery may result in damage to the nickel-cadmium battery. If sulphuric acid has been inadvertently mixed with the electrolyte in the battery, the upper areas of the cells will appear greenish in color. In such cases, the battery must be replaced.

a. Check that BAT switch is OFF, and external power is not applied. Open compartment door.

b. Disconnect battery cable connector by turning knob counterclockwise.

c. Disconnect two vent tubes from battery case.

d. Cut lockwire, open tie-down clamps and disengage rods from battery cover. Lift battery from compartment.

e, If battery is to be relocated, detach each tie-down rod from eyebolt at lower end by removing attaching bolt with nut and washers,

f. Stow battery cable connector in dummy receptacle Close compartment door.

9-37. Deleted

9-38. Installation – Battery.

WARNING

DANGEROUS CHEMICALS ARE USED IN NICKEL-CADMIUM BATTERIES

The electrolyte used in nickel-cadmium batteries contains potassium hydroxide (KOH), which is a caustic chemical agent. Serious and deep burns of body tissue will result if the electrolyte comes in contact with the eyes or any part of the body. Use rubber gloves, rubber apron, and protective eye covering when handling the battery. If accidental contact with the electrolyte is made, use ONLY clean water and immediately (seconds count) flush contaminated areas. Continue flushing with large quantities of clean water. Seek medical attention immediately. Before removing or installing the battery, insure that the battery switch is off and the battery has cooled down if overheated. Removal or installation of the battery connector while the battery is under load may result in explosion, electrical arcing, and possible severe burns to personnel.

CAUTION

Take every possible step to keep the nickel-cadmium battery as far away as possible from the lead-acid type of battery. Do not use the same tools and materials (screwdriver, wrenches, gloves, apron, etc.) for both types of batteries. Anything associated with the lead-acid battery, even the air, must never come in contact with the nickel-cadmium battery or its electrolyte. Even a trace of sulphuric acid fumes from a lead-acid battery may result in damage to the nickel-cadmium battery. If sulphuric acid has been inadvertently mixed with the electrolyte in the battery, the upper areas of the cells will appear greenish in color. In such cases, the battery must be replaced.

CAUTION

Rigid connecting link (205-030-249-3) must be installed in aft battery compartment before flight or ground run.

NOTE

Insure battery area is clean before installation of battery.

a. Open compartment door. If battery is being relocated, install tie-down rods on eyebolts provided on shelf, using bolts, nuts, and washers removed from old location. Detach battery cable connector from dummy receptacle.

CAUTION

Incorrect installation of the battery cover does not allow the rubber retainer strip to cover two center cell caps. Loosening of these caps and electrolyte-spillage may cause battery overheating and/or explosion.

b. Place battery on shelf, aligned for connections. Engage tie-down rods to strap on cover. Secure and lockwire (Cl 55).

c. Connect two vent tubes to battery case and tighten clamps.

d. Insert cable connector in battery receptacle and secure by turning knob clockwise.

e. Check that battery voltmeter circuit breaker, near left side of battery, is closed and that voltmeter will show indication when BAT switch is ON. Return switch to OFF after test. Close compartment door.

NOTE

If the battery exhibits signs of overheating or overcharging, such as fumes or vapor coming from the vent tube or free electrolyte present inside case, adjustment of voltage regulator should be checked.

9-39. BATTERY RELAY.

9-40. Description - Battery Relay. Battery relay (K9) is mounted in the left side of the nose compartment. Helicopters S/N 65-9565 and subsequent have a battery relay for each battery location. Battery relay (K65) is mounted in the aft battery compartment. The relay is an electrically operated switch between the battery and the main bus bar. It is controlled by a switch which opens or closes the circuit to the actuating coil of the relay. Refer to paragraphs 9-5 through 9-11 for maintenance procedures.

9-41. BATTERY FEEDER RELAY.

9-42. Description - Battery Feeder Relay. The battery feeder relay (K66) located in the aft electrical compartment, is connected between the main dc bus and battery relay (K9). It serves to isolate the forward battery circuit from the main dc bus when the battery is installed in the aft battery position. It is automatically actuated when the battery is installed in the nose compartment and battery relay (K9) is actuated. Refer to paragraphs 9-5 through 9-11 for maintenance procedures.

9-43. EXTERNAL POWER SYSTEM.

9-44. Description - External Power System. During ground operations, external power may be connected to the systems through an external power receptacle (J109), located in lower left side of AFT fuselage, below electrical equipment compartment access door. No special action or switching is necessary to connect external power. If external power connections are of the correct polarity, the external power relay (K1), located in the aft electrical compartment, doses automatically, and connects the ground unit to the main power cables energizing the essential bus; if not, no action occurs. The nonessential bus is energized with NON-ESS BUS switch (S62) in either NORMAL or MANUAL position. All circuits in the helicopter, with exception of the overvoltage protection circuit, function the same on external power as on helicopter power. Helicopter circuits are not protected against overvoltage when operating on external power.

9-45. Functional Test - External Power System.

NOTE

Unless otherwise specified, the voltmeter circuit breaker is to remain closed throughout all operational checks. Except where otherwise specified, all operational checks shall utilize external power. All circuit breakers shall be opened before external power is connected to the helicopter.

a . Before connecting external power for the first time, check for correct polarity, and terminations, and accomplish following steps:

b. Apply 28 Vdc of reverse polarity between the small pin on the external power receptacle and the frame of the helicopter. Check that the external power relay does not close. Remove 28 Vdc reverse polarity.

c. Connect a 28 Vdc external power source to the helicopter external power receptacle (J109). Energize power source. Close GEN & BUS RESET circuit breaker. Dc voltmeter should indicate external power on the essential bus.

d. Place NON-ESS BUS switch (S62) in the NORMAL position. Place DC VM switch (S2) in NON-ESS BUS position. Voltmeter should indicate 28 Vdc on the nonessential bus. Repeat test with NON-ESS switch (S62) in MANUAL position. Voltmeter should indicate 28 Vdc on the nonessential bus.

9-46. Troubleshooting – External Power System. Use table 9-2 and perform checks as necessary to isolate trouble. In the following table, tripped circuit breakers and burned-out indicator

Table 9-2. Troubleshooting External Power System

CONDITION

TEST OR INSPECTION

CORRECTIVE ACTION

1. Power not available when external power plug is inserted into connector (J109).

STEP 1. Inspect for loose connection between external power plug and connector (J109)

Reconnect external power plug if loose.

STEP 2. Check for reversed polarity in external power plug.

Reconnect at attachment points on APU if reversed.

STEP 3. Check for low voltage from external power supply.

Increase output of external power.

Table 9-2. Troubleshooting External Power System

STEP 4. Determine if external power relay (KI) is activated. If relay is not actuated, check that ground potential is present at terminal X1 of relay. Check that relay actuating voltage is present across terminals X1 and X2 of relay.

Replace external power relay if relay actuating voltage is present but relay is not activated [paragraph 9-5).

lamps are omitted from indications of trouble. Such trouble is usually easily detected and corrected. Broken wiring is always a probable cause of circuit malfunction or failure and has not been included. (See figure F-19.)

NOTE

Before you use this table, be sure you have performed all normal operational checks.

9-47. EXTERNAL POWER RECEPTACLE.

9-48. Description - External Power Receptacle. The external power receptacle (J109) is located in lower left side of AFT fuselage below the electrical equipment compartment access door and is covered by a small access door. The receptacle provides for connection of an external power source to the helicopter.

9-49. Cleaning — External Power Receptacle. Refer to paragraph 9-7 for cleaning procedure.

9-50. Inspection — External Power Receptacle. Refer to paragraph 9-8 for inspection procedure.

9-51. Removal — External Power Receptacle. a, Ensure that all electrical power is OFF.

b. Remove nuts and washers from terminal posts of receptacle and remove wires to receptacle. Cover wire ends with tape (C275).

c. Remove mounting screws and lift receptacle from bracket.

9-52. Repair or Replacement - External Power Receptacle. Refer to paragraph 9-10 for repair or replacement criteria.

9-53. Installation - External Power Receptacle.

a. Position receptacle on bracket and install mounting screws.

b. Remove tape from wire ends and install wire ends on terminal posts of receptacle.

9-54. EXTERNAL POWER RELAY.

9-55. Description - External Power Relay. The external power relay (K1), installed in the aft electrical compartment, connects an external source of power through the external power receptacle to the electrical system of the helicopter. A diode (CR2), mounted on terminal board (TB36), is located near the relay, and serves to complete ground return for the holding coil and prevents reverse polarity to the helicopter electrical system. Refer to paragraph 9-5 through 9-11 for maintenance procedures.

9-56. GENERATOR AND DC BUS SYSTEM.

9-57. Description - Generator and DC Bus System.

a. The dc bus system supplies regulated power for all dc electrical components of the helicopter. This system is fed by external power, battery (BT2), main dc generator (G2), and standby starter-generator (G6).

b. The self-excited main generator (G2) normally supplies electrical power to the main bus when its output voltage is approximately 1/2 volt above that existing at the bus. Mechanical power is not supplied to the main generator until the engine starts driving the main rotor transmission. The voltage of the main generator at which it starts supplying power to bus system will vary according to the voltage applied to the main bus from other sources (other sources may be: battery, standby generator, or external power supply.) If no other voltage source is connected to the bus, the main generator will be connected to the main bus when its output is 22 to 24 volts with main generator switch on. The main generator reverse current relay (K5) automatically closes and opens the circuit between the generator and the main bus. The voltage regulator (VR1) provides for proper generator voltage output during normal operating speeds and loads. A field control relay (K7) operating in conjunction with the overvoltage relay (K6) protects the dc powered components on the helicopter from overvoltage from the main generator. A generator switch (S8) is provided on the dc power control panel to provide manual control of the reverse current relay. A warning light is provided on the caution panel to indicate when the main generator reverse current relay is not closed. The warning light is provided with dc power from the battery or standby generator through the contacts of the bus control relay (K4). The main generator supplies power to the bus control relay coil through the IND terminal on the reverse current relay when it closes and connects the main generator to the main bus.

c. The standby generator (G6) develops voltage whenever it is being driven by the engine. The voltage regulator (VR2) in the standby system is adjusted so the voltage output of the standby generator is approximately one volt below that of the main generator normal output. A reverse current relay (K23) is also provided for the standby system. Control of the reverse current relay is provided for by the standby position of the starter-generator switch (S70) and the bus control relay (K4). During normal operation the main generator reverse current relay energizes the bus control relay when the main generator is connected to the bus. The bus control relay performs three functions: (1) Opens the circuit between the standby position of the starter-generator switch and the standby reverse current relay preventing the relay from automatically connecting the standby generator to the main bus. (2) Opens the circuit to the DC generator light, turning the caution light off. (3) Completes a circuit from the essential bus through the “normal on” position of the nonessential bus switch (S62) to the nonessential bus relay (K2), energizing the nonessential bus. If the main generator fails or is disconnected from the main bus for any reason, the following events occur. The bus control relay is de-energized. The DC GENERATOR segment on the caution panel illuminates. The circuit to the nonessential bus relay opens to de-energize the nonessential bus. While the circuit between the standby position of the starter-generator switch and the standby reverse current relay is completed to connect the standby generator to the main bus. Overvoltage protection is provided for the standby system by a built-in over-voltage circuit breaker on solid state voltage regulators. A loadmeter (M1) is provided for measuring the system amperage load on the standby generator. On helicopters S/N 66-746 and subsequent, a standby generator field relay (K15) is provided.

d. The purpose of the standby generator field control relay is to open the standby generator shunt field circuit whenever the coil is energized. Power is applied to the coil whenever the starter relay is energized by pressing the start switch. The shunt field circuit is completed through the relay when the start switch is released.

9-57.1. Deleted

9-58. Functional Test - Generator and DC Bus System.

a. Perform functional test of main generator circuitry as follows:

(1) Disconnect wires P13A4, P13B4, and P13C4 from positive terminal B, and disconnect wires P14A4, P14B4, and P14C4 from negative terminal E of main generator. Connect these wires to an adjustable 28 volt dc power source (26 to 33 Vdc), observing the proper polarity.

(2) Energize power source.

(3) Close GEN & BUS RESET, MAIN GEN VM and CAUTION LIGHTS circuit breakers. There should be no voltage on the main bus in the electrical compartment. Check that dc voltmeter indicates voltage in the MAIN GEN position.

(4) Close MAIN GEN FIELD circuit breaker. Position generator switch (S8) to ON. Reverse current relay (K5) should close and both essential and non-essential buses should be energized. Check that DC GENERATOR caution light is off.

(5) Momentarily turn on a load, such as the main inverter, and check that main generator loadmeter reads upscale.

NOTE

Solid state voltage regulators have an overvoltage circuit breaker set to trip at approximately 30.5 volts to cut power from generator field.

(6) Ensure that BATT switch (S40) is OFF. Slowly increase voltage to the power source. At 31 to 33 volts, overvoltage relay (K6) should actuate, causing field relay (K7) to trip and reverse current relay (K51) to open and thus remove voltage from all buses. Do not exceed 33 volts.

(7) Reduce voltage to 28 volts. Position battery switch (S40) to ON. Reset main generator system by placing generator switch (S8) in the RESET position and then back to OFF. Return battery switch to OFF. Position generator switch to ON Field relay (K7) should reset and reverse current relay (K5) should reclose again energizing all buses.

(8) Return generator switch to OFF, open GEN & BUS RESET circuit breaker, and reconnect wires.

b. Perform functional test of standby starter-generator circuit as follows:

(1) Ensure BATT SW is OFF. Disconnect wire P37A1 from positive terminal B and disconnect wires K5A4 and K5C4 from negative terminal E on the starter-generator. Connect these wires to an adjustable 28 volt dc power source (26 to 33 Vdc). Observing the proper polarity.

(2) Close both standby generator loadmeter circuit breakers in the electrical compartment. Position starter-generator switch (S70) to START. Energize external power source. There should be no voltage on the main bus in the electrical compartment. Check that dc voltmeter indicates power source voltage in the STBY GEN position.

(3) Close STBY GEN FIELD circuit breaker. Position starter-generator switch (S70) to STBY GEN and check that essential bus is energized.

(4) Close GEN & BUS RESET circuit breaker. Position nonessential bus switch (S62) to MANUAL ON. Both essential and nonessential buses should be energized. Check that dc voltmeter indicates voltage of the power source in the STBY GEN, ESS BUS and NON ESS BUS positions.

(5) Momentarily engage a load, such as the main inverter, and check that the standby generator loadmeter reads upscale. Return all switches and breakers to the open position and reconnect wires to their proper terminals.

9.58.1. Deleted.

9-59. Troubleshooting - Generator and DC Bus System.

a. On helicopters prior to S/N 66-746, perform checks as necessary to isolate trouble using the following troubleshooting table 9-3. In the following table, tripped circuit breakers and burned out indicator lamps are omitted from indications of trouble. Such trouble is usually easily detected and corrected. Broken wiring is always a probable cause of circuit malfunction or failure and has not been included. (See figure F-20.)

b. On helicopters S/N 66-746 and subsequent, perform checks as necessary to isolate trouble using the following troubleshooting table 9-4. In the following table, tripped circuit breakers and burned-out indicator lamps are omitted from indications of trouble. Such trouble is usually easily detected and corrected. Broken wiring is always a probable cause of circuit malfunction or failure and has not been included (See figure F-20)

NOTE

Before you use this table, be sure you have performed all normal operational checks.

Pages 9-23 and 9-24 Deleted

NOTE

Before you use this table, be sure you have performed all normal operational checks.

Table 9-3. Troubleshooting Generator and DC Bus System (Helicopters Prior to S/N 66-746)

CONDITION

TEST OR INSPECTION

CORRECTIVE ACTION

1. DC GENERATOR light on caution panel not illuminated prior to engine start-up. Bus is energized by battery or external power and caution light circuit breaker is closed.

STEP 1. Determine if bus control relay (K4) is defective by connecting a jumper between terminals B2 and B3 on relay.

Replace relay if DC GENERATOR light comes on (paragraph 9-5).

STEP 2. Determine if master caution panel (A4) is defective by disconnecting plug P24 from caution panel and checking for dc voltage between W (+) and Z (-). Negative voltage should be present. Replace lamps in GENERATOR segment and reconnect plug P24.

Replace master caution panel if light still does not illuminate (paragraph 9-12).

2. DC GENERATOR light on caution panel does not go out after engine start-up.

STEP 1. Determine if main generator voltage is less than 1.0 volt above standby generator voltage.

Adjust or replace main generator voltage regulator (VR1) (paragraph 9-71).

STEP 2. Determine if bus control relay (K4) is defective by moving DC VOLTMETER switch alternately to MAIN GEN, STBY GEN, and ESS BUS positions.

Replace bus control relay if rated voltage is indicated in all positions and main generator voltage is on essential bus (paragraph 9-5). If rated voltage is indicated in all positions and standby generator voltage is on essential bus, continue with step 2.

STEP 3. Check for dc voltage at SW terminal of reverse current relay (K5).

Replace reverse current relay if dc voltage is present at SW terminal (paragraph 9-5).

3. No output from main generator (standby generator operates normally).

CAUTION

If voltage begins to build up, return MAIN GEN switch quickly to OFF to prevent excessive voltage build-up.

Table 9-3. Troubleshooting Generator and DC Bus System (Helicopters Prior to S/N 66-746) (Cont)

CONDITION

TEST OR INSPECTION

CORRECTIVE ACTION

STEP 1. Place MAIN GEN switch in OFF and dc voltmeter switch (S2) in MAIN GEN position. Remove plug P60 from main generator field relay, and jumper-connect pins H and N. Place MAIN GEN switch in ON position and observe dc voltmeter.

Replace main generator (G2) if voltage does not build up (paragraphs 9-64 and 9-65).

STEP 2. Check main generator field relay (K7). If relay is tripped, place dc voltmeter switch in MAIN GEN position; then, while observing voltmeter, momentarily place MAIN GEN switch in RESET position.

Replace overvoltage relay (K6) if voltage builds up and generator cuts out at less than 31 volts on each reset attempt (paragraph 9-5).

STEP 3. Remove plug P60 from main generator field relay (K7). Check for continuity between relay sockets N and P.

Replace main generator field relay if no continuity exits or if resistance is more than one ohm (paragraph 9-5).

STEP 4. If main generator field relay (K7) will not reset, check for voltage between pin B and helicopter structure when MAIN GEN switch is moved to RESET position.

Replace relay if voltage is present (paragraph 9-5).

STEP 5. Flash field generator, failure of the generator to produce output voltage or current may be caused by loss of residual magnetism in the generator field poles. Restore generator residual magnetism by flashing field as follows:

Remove carbon pile voltage regulater from the base or disconnect the wire from terminal F+/A of the solid state voltage regulator. Place battery switch in off position. Attach one end of the 16 gauge jumper wire to terminal "A" of the carbon pile voltage regulator base or to the wire disconnected from terminal F+/A of the solid state voltage regulator and other end to positive bus. Place battery switch momentarily on, then back off. Remove jumper wire. Reinstall carbon pile voltage regulator or reconnect the wire to terminal F+/A of the solid state voltage regulator.

4. No output from standby generator (main generator operates normally).

STEP 1. Determine if built-in protective circuit breaker on solid state voltage regulator (VR2) has tripped.

Reset circuit breaker. Replace voltage regulator if circuit breaker continues to trip (paragraph 9-71).

CAUTION

If voltage begins to build up, remove jumper from across terminals.

STEP 2. Disconnect the wire from the standby voltage regulator terminal F+/A. Place dc voltmeter switch in STBY GEN position. Momentarily place a 16 gauge jumper wire across main voltage regulator terminal L+/B and the wire disconnected from F+/A of the standby voltage regulator.

Replace standby generator (G6) if voltage does not build up (paragraph 4-159). Replace standby generator voltage regulator (VR2) if voltage does build up (paragraph 9-71).

STEP 3. Flash generator field, refer to Condition 3, Step 5, Instructions.

Table 9-3. Troubleshooting Generator and DC Bus System (Helicopters Prior to S/N 66-746) (Cont)

CONDITION

TEST OR INSPECTION

CORRECTIVE ACTION

5. Standby generator output normal but does not switch onto main bus when main generator is cut out.

Check for dc voltage at terminal D2 on bus control relay (K4). If voltage is present (no voltage may indicate STARTER-GEN switch is defective), jumper-connect terminals D2 and D3.

Replace bus control relay if standby generator switches onto main bus. Replace standby generator reverse current relay (K23) if standby generator does not switch onto main bus (paragraph 9-5).

Table 9-4. Troubleshooting Generator and DC Bus System (Helicopters SIN 6746 and Subsequent)

CONDITION
TEST OR INSPECTION
CORRECTIVE ACTION

1. DC GENERATOR light on caution panel is not illuminated prior to engine start Bus is energized from battery or external power and caution light circuit breaker is closed.

   STEP 1. Temporarily connect jumper wire between terminals B2 and B3 on bus control relay (K4).

   Replace bus control relay It light Illuminates (paragraph 9-5).

   STEP 2. Disconnect plug P24 from master caution light panel (A4) and check for dc voltage between terminals W(+) and Z (-) of the plug.

   Replace master caution light panel i voltage Is present (paragraph 9-5).

2. DC GENERATOR light on caution panel does not extinguish after engine start and generator is placed in operation.

   STEP 1. Check for main generator voltage on essential bus.

   Replace bus control relay (K4) If generator voltage Is present on essential bus (paragraph 9-5).

   STEP 2. Check for standby generator voltage on essential bus.

   Replace main generator reverse current relay (KS) n standby generator voltage is present on essential bus (paragraph 9-5).

   STEP 3. Measure main generator output voltage.

   Adjust or replace main generator voltage regulator (VRI) ir less than 1.0 volt above standby generator voltage (paragraph 9-71).

3. No voltage output from main generator but starter-generator operates normally.

   STEP 1. Determine if main generator voltage regulator (VR1) is improperly adjusted or defective.

   Adjust or replace main generator voltage regulator I defective (paragraph 9-71).

   STEP 2. Check for defective main generator (G2).

   Replace main generator If defective (paragraph 9-40).

Table 9-4. Troubleshooting Generator and DC Bus System (Helicopters S/N 66-746 and Subsequent) (Cont)

CONDITION

TEST OR INSPECTION

CORRECTIVE ACTION

STEP 3. Check for defective or improperly adjusted overvoltage relay.

Adjust or replace overvoltage relay if defective (paragraph 9-5).

STEP 4. Check main generator switch (S8) for proper operation.

Replace main generator switch if defective (paragraph 9-5).

STEP 5. Place main generator switch (S8) to RESET and then to ON. (Bus energized by battery).

Replace main generator field relay (K7) if voltage does not build up (paragraph 9-5).

STEP 6. Flash generator field, refer to table 9-3, condition 3, step 5, instructions.

4. No voltage output from starter-generator. Main generator operates normally.

STEP 1. Determine if built-in protective circuit breaker on solid state voltage regulator (VR2) has tripped.

Reset circuit breaker. Replace voltage regulator if circuit breaker continues to trip (paragraph 9-71).

STEP 2. Determine if standby generator voltage regulator (VR2) is improperly adjusted or defective.

Adjust or replace standby generator voltage regulator if defective (paragraph 9-71).

STEP 3. Check for defective standby generator (G6).

Replace standby generator if defective (paragraph 9-68.3.).

STEP 4. Check starter-generator switch (S70) for proper operation.

Replace starter-generator switch if defective (paragraph 9-5).

STEP 5. Check for defective standby generator field control relay (K15).

Replace standby generator field control relay if defective (paragraph 9-5).

STEP 6. Check for defective bus control relay (K4).

Replace bus control relay if defective (paragraph 9-5).

STEP 7. Flash generator field, refer to table 9-3, condition 3, step 5, instructions.

Table 9-4. Troubleshooting Generator and DC Bus System (Helicopters S/N 66-746 and Subsequent) (Cont)

CONDITION

TEST OR INSPECTION

CORRECTIVE ACTION

5. Standby generator does not switch onto bus to provide power when main generator is inoperative.

STEP 1. Check for dc voltage on terminal D2 of bus control relay (K4).

Replace starter-generator switch (S70) if voltage is not present (paragraph 9-5).

STEP 2. Jumper terminals D2 AND D3 on bus control relay (K4).

Replace bus control relay if standby generator output switches on to bus. Replace reverse current relay (K23) if standby generator does not switch onto bus (paragraph 9-5).

6. No voltage to nonessential bus when NON-ESS BUS switch is in NORMAL position. Main generator voltage is present on essential bus. GEN & BUS RESET circuit breaker is closed.

STEP 1. Ensure that actuating voltage is present across terminals X1 and X2 of bus control relay (K4) and that 28 Vdc essential bus voltage is present at terminal A1. Check for voltage at terminal A2.

Replace bus control relay if voltage is not present at terminal A2 (paragraph 9-5).

Check for actuating voltage at nonessential bus relay (K2).

Replace nonessential bus switch (S62) if voltage is not present. Replace relay if voltage is present (paragraph 9-5).

7. No voltage on nonessential bus when NON-ESS BUS switch is in MANUAL position. Main generator voltage present on essential bus. GEN & BUS RESET circuit breaker is closed.

Check for actuating voltage at nonessential bus relay (K2).

Replace nonessential bus switch (S62) and/or GEN & BUS RESET circuit breaker if actuating voltage is not present at relay (paragraphs 9-5 and 9-12). Replace relay if actuating voltage is present (paragraph 9-5).

Page 9-30, Including Table 9-4.1, has been deleted.

9-60. MAIN DC GENERATOR.

9-61. Description — Main DC Generator. The main DC generator (G2) is mounted on an accessory pad on the forward side of the main rotor transmission. Its capacity is rated at 300 amperes and its voltage is controlled by a voltage regulator which is part of the main generator system. The main DC generator is driven at the same speed as the engine output shaft and has to be turned within a specific range of speed to furnished rated current at normal regulated voltage.

9-62. Cleaning — Main DC Generator.

a. Remove moisture with a clean, soft cloth.

WARNING

Dry cleaning solvent is flammable and its fumes are toxic. Do not use near a flame. Provide adequate ventilation.

b. Remove grease, fungus and dirt with a clean, lint-free cloth dampened with solvent (C261).

c. Remove dirt from electrical terminals with a bristle brush (C62).

9-63. Inspection — Main DC Generator.

a. Visually inspect generator for damage.

b. Check terminals for damage and terminal board to ensure that it is not warped or cracked.

c. Check brush cover for dents and loose or bent pins.

d. Check diagonal groove in aft end of brush. If no part of groove is visible, brush requires replacement.

e. Check that wear indicator (diagonal groove in brush) indicates that brush has more than one-fourth life remaining.

f. Check brushes for freedom of movement in holders.

g. Check brush springs for proper tension on brushes.

(1) Using a new brush assembly (see figure 9-2.1.1), cut a groove down the center of each side and across the bottom of both sections. When prepared in this manner, each brush section will have a continuous groove around two sides and the bottom.

CAUTION

This operation renders this brush assembly unfit for service. Use only for checking spring tension.

(2) Place a thin wire around the brush in the groove; then insert the brush in one of the brush holders. Tie the two ends of the wire together and hook a spring scale in the loop formed.

(3) Raise the brush by means of the scale until the lower end of the brush is even with the bottom edge of the brush holder. When in this position, the brush spring tension should be between 35 and 52 oz. for P/N 30010-000. Take an average of several readings, if the spring tension is out of this range, replace the spring.

h. Check that brush leads are flexible and have a bright appearance.

i. Check commutator for a smooth bright appearance with a light filming.

j. Check that brushes are properly seated (100 percent in direction of rotation and minimum of 75 percent axially).

k. Visually check driveshaft splines for wear.

NOTE

Spline is safe to a top land dimension of zero, but if service records indicate top land dimension may reach zero prior to new service period, the driveshaft or armature should be replaced.

9-63.1 Flashing The Field Of Generator. Failure of a generator to produce output voltage or current may be caused by loss of residual magnetism in the generator field poles. Restore Generator Residual Magnetism by flashing field as follows:

a. Remove voltage regulator.

b. Place battery switch in OFF position.

c. Attach one end of a jumper cable to terminal A of voltage regulators base and other end to positive bus.

d. Momentarily place battery switch in ON position.

e. Remove jumper cable.

9-64. Removal — Main DC Generator.

a. Open forward transmission fairing.

b. Tag wires to identify for reinstallation and disconnect from generator.

c. Loosen attaching nuts and position each washer out of recess, rotate generator and pull generator free of transmission drive.

9-65. Repair or Replacement — Main DC Generator.

a. Repair brush cover dents.

b. (AVIM) Replace brush when no part of diagonal groove is visible on aft end of brush. Refer to paragraph 9-65.1.

c. No other repairs are authorized.

TM 55-1520-210-23-2

9-65.1. (AVIM) Replacement - Generator Brushes. New brushes must be sanded and run in to properly seat them on the commutator before applying full load to the generator. Failure to do so can result in excessive sparking, which will cause burning and pitting of the commutator.

a . Remove generator from aircraft.

b . Remove generator brush cover.

c . Remove worn brushes.

d . Install new brushes.

e . Preliminary Brush Seating.

(1) Raise each brush spring with a stiff wire hook and lift brush away from the commutator, until the brush spring can hold the brush in position by resting against the side of the brush.

(2) Place strip of sandpaper (C233), slightly wider than the combined width of the two brush halves, around the commutator with the sand side out. Cut sandpaper strip to .125 inch less than the commutator circumference. Secure one end of the strip to the commutator surface with tape (C276) so that the taped end will lead in the direction of normal rotation, and the other end will remain loose.

(3) Lower one set of the brushes in place against the sandpaper and carefully rotate the armature by hand in the normal direction of rotation until a full seat is obtained on each brush. Do not sand excessively. Remove excess carbon dust from sandpaper before sanding next set of brushes. Sand one set of brushes at a time.

(4) Remove the sandpaper; remove all carbon dust with dry compressed air.

f. Final Brush Seating.

(1) Mount generator in Test Stand, Aircraft Generator (Item T 16, Table 1-2) (TM 55-4920-2771 15).

(2) Operate the generator, with brush cover installed, at approximately **5,000** rpm, with air inlet temperature between **50°-104° F (10° -40° C),** until brushes are seated **100** percent minimum in the direction of rotation and **90** percent minimum in the axial direction.

g. Remove generator from test stand.

h. Install generator on aircraft.

9-66. Installation-Main DC Generator.

a . Apply light coat of grease (C161) on generator shaft. Install new gasket. Align generator with transmission drive, and slide generator into drive splines.

b. Position generator on studs with terminals one bolt left of helicopter centerline rotate generator and tighten retaining nuts to attach generator to drive pad.

c. Connect wires to generator terminals.

d. Position rubber boot to cover generator connections and secure with lacing cord.

e. Perform a voltage regulator check if a new or different generator is installed. Refer to paragraph 9-75.

9-67. STANDBY GENERATOR (STARTER-GENERATOR).

9-68. Description - Standby Generator. The starter-generator (G6) is mounted on the aft side of the engine accessory drive gearbox. It serves to drive the engine compressor rotor during the start cycle and also serves as a 300 amp, engine driven standby generator at normal engine speeds.

9-68.1. Cleaning - Standby Generator.

a. Remove moisture with a clean soft cloth.

Warning

Dry cleaning solvent is flammable and its fumes are toxic. Do not use near a flame. Provide adequate ventilation.

b. Remove grease, fungus, and dirt with a clean, lint-free cloth dampened with solvent (C261).

c. Remove dirt from electrical terminals with a bristle brush (C62).

d. When starter generator is oil soaked, return to depot for internal cleaning.

9-68.2. Inspection - Starter Generator.

a. Visually inspect generator for damage.

b. Check terminals for damage and terminal board to ensure that it is not warped or cracked.

c . Check brush cover for dents and loose or bent pins.

NOTE

Starter generator must be removed to adequately inspect brush wear and condition.

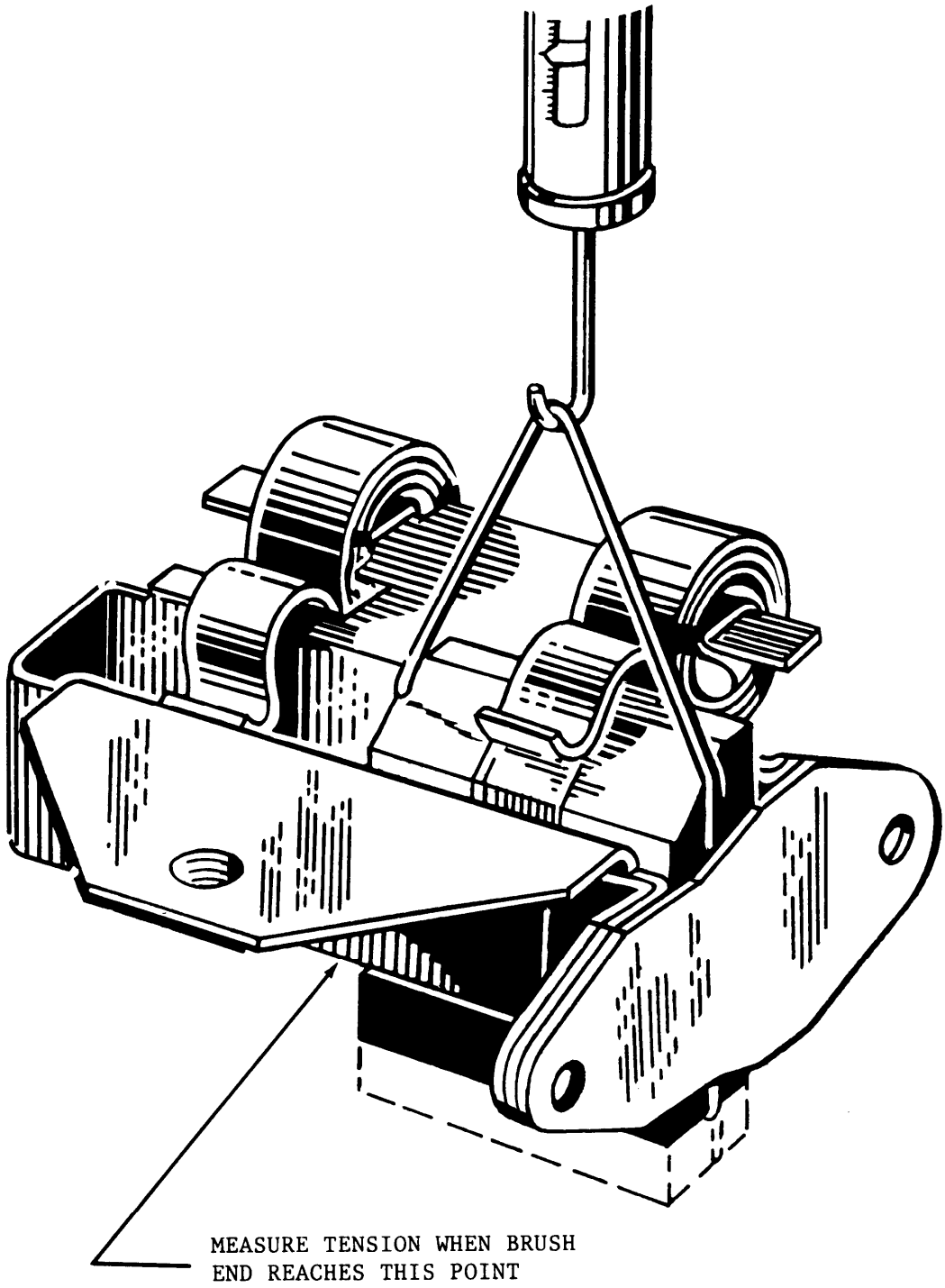

Figure 9-2.1.1 Checking Brush Spring Tension.

d. Check diagonal groove in brush set. If no part of groove is visible, replace brush set.

a. Check that wear indicator (diagonal groove in brush) indicates that brush has more than one-fourth life remaining.

f. Check brushes for freedom of movement in holders.

g. Check brush springs for proper tension on brushes.

(1) Using a new brush assembly (see figure 92.1.1), cut a groove down the center of each side and across the bottom of both sections. When prepared in this manner, each brush section will have a continuous groove around two sides and the bottom.

CAUTION

This operation renders this brush assembly unfit for service. Use only for checking brush spring tension.

(2) Place a thin wire around the brush in the groove, then insert the brush in one of the brush holders. Tie the two ends of the wire together and hook a spring scale in the loop formed.

(3) Raise the brush, by means of the scale until the lower end of the brush is even with the bottom edge of the brush holder. When in this position the brush spring tension should be between 35 and 52 oz. for P/N 30E2061-A Generator or 55 and 65 oz. for P/N 23064-001 Generator. Take an average of several readings, if spring tension is out of this range, replace the brush spring.

h. Check that brush leads are flexible and have a bright appearance.

i. Check commutator for a smooth bright appearance with a light filming.

j. Check that brushes are properly seated (100 percent in direction of rotation and a minimum of 75 percent axially).

k. Check drive spline for excessive wear by rocking armature back and forth. If rocking occurs remove generator.

l. Check drive shaft assembly splines for wear by measuring top land of each tooth. If top land dimension is 0.015 inch or less, replace generator.

NOTE

The spline is safe to a top land dimension of zero, but if service records indicate top land dimension may reach zero prior to the next service period, the drive shaft or armature should be replaced.

9-68.3. Removal - Standby Generator.

a. Disconnect battery. Disconnect electrical leads from starter generator.

NOTE

The Gas Producer Tachometer Generator can be removed to facilitate replacement of starter generator.

b. Pull end of outlet duct (8, figure 9-2.1) from outlet shroud (7) on aft end of starter generator.

c. Remove clamp and detach flexible hose (2) from inlet shroud (3) on forward end of starter generator. Loosen two bolts on left side and slide shroud aft on starter generator to gain access to mounting studs.

CAUTION

Caution must be used to avoid dropping generator or setting generator onto tail rotor drive shaft tunnel. Denting of tail rotor drive shaft tunnel may cause it to come into contact and chafe the tail rotor drive shaft.

d. Loosen nuts on mounting studs. Carefully rotate starter generator and pull straight aft until unit is free of mounting studs and drive shaft engagement. Cover mounting pad to prevent entrance of foreign material.

N O T E

To facilitate easier removal of the starter/generator, the tail rotor drive shaft tunnel may be disconnected at the aft end, to allow the tunnel to be lowered.

e. Remove inlet shroud (3) from starter generator. Loosen bolt on outlet shroud (5) and remove shroud.

N O T E

If starter generator is equipped with end cover (7) and locating screws (6), these items must be removed before removing outlet shroud (5).

9-68.4. Repair or Replacement - All Starter Generators.

a. Repair brush cover dents.

b. (AVIM) Replace brushes when no part of diagonal groove is visible on aft end of brush. Refer to paragraph 9-65.1.

c. No other repairs are authorized.

9-68.5. Deleted.

9-68.6. Installation - Starter Generator.

a. Position outlet shroud (5, figure 9-2.1) on aft end of starter generator, secured with stainless steel bolts and thin washers at clamping joint on right side.

NOTE

When replacement starter generator is requisitioned, the possibility exists of receiving a different manufacturer's component. If this occurs, wiring diagram and interchangeability chart (Figure 9-2.2) is to be utilized.

NOTE

Mark serial number for starter-generator and end of case. This permits ease of checking number after engine is installed in helicopter. Use a contrasting color paint.

b. If starter generator has provisions for end cover (7, figure 9-2.1) and locating screws (6), these items must be installed as follows:

(1) Align outlet shroud with locating holes in starter generator and install stainless steel screws, with thin washers. Lockwire screws.

(2) Position end cover and install six screws, with aluminum alloy washers. Lockwire screws in pairs.

c. Place inlet shroud (3) on forward end of starter generator. Slide shroud far enough aft to permit positioning starter generator on mounting studs. Install stainless steel bolts, with thin washers, at clamping joint of shroud. Tighten bolts only enough to temporarily hold shroud in position, with inlet pointing to right.

d. Remove mounting pad cover. Inspect gasket for serviceability; replace if necessary. Coat starter generator drive shaft, and pack female splines of shaft in gearbox 2/3 full, with lubricant (C161).

CAUTION

Caution must be used to avoid dropping generator or setting generator onto tail rotor drive shaft tunnel. Denting of tail rotor drive shaft tunnel may cause it to come into contact and chafe the tail rotor drive shaft.

NOTE

Cement or glue (C25) washers to nuts (previously removed from starter mount). Start nuts on studs for mounting starter generator. Due to limited accessibility use only five nuts and washers.

e. Carefully position starter generator on mounting studs, with electrical terminals pointing to the seven o'clock position, making sure that shaft meshes properly with spines of shaft in gearbox. Rotate starter generator and tighten mounting nuts. Torque nuts 160-190 inch-pounds.

f. Slide inlet shroud (3) forward to normal position. Connect flexible (2) to inlet shroud and secure with clamp. Tighten bolts at clamping joint.

g. Install new packing in groove around upper end of outlet duct (8). Insert duct into shroud (5).

NOTE

If the tail rotor drive shaft tunnel was disconnected for removal/installation of starter/generator, reconnect the tunnel.

h. Connect electrical leads (figure 9-2). (Refer to Appendix F.) Connect battery.

i. Perform a voltage regulator check if a new or different starter/generator is installed. Refer to paragraph 9-75.

NOTE

When making electrical installation on Bendix manufactured starter generator. If terminal stud length is found to be insufficient for proper installation, remove furnished washer and replace with washer P/N AN960D616L.

9-68.7 Deleted.

9-69. GENERATOR SHUNT.

9-70. Description — Generator Shunt. The standby generator shunt (R1) and main generator shunt (R2) provide a voltage drop, proportional to the current, to operate the standby generator loadmeter (M1) and main generator loadmeter (M4). Refer to paragraphs 9-5 through 9-11 for maintenance procedures.

9-71. VOLTAGE REGULATOR.

9-72. Description — Voltage Regulator. The main generator voltage regulator (VR1) and standby generator voltage (VR2) are located in the aft electrical compartment on the left side of the helicopter. The voltage regulator controls the voltage output of the generator by controlling the magnetic field strength within the generator. Variation of the resistance which is in series with the generator's shunt field coils controls shunt field current to control generator voltage output. The voltage regulator of the standby generator is set at a lower voltage than that of the main generator. Solid state voltage regulators incorporate a circuit breaker which will open the field circuit of the generator when regulated potential exceeds **30.5** volts.

9-73. Cleaning — Voltage Regulator.

a. Remove moisture and dirt with a clean, soft cloth.

WARNING

Dry cleaning solvent is flammable and its fumes are toxic. Provide adequate ventilation. Do not use near a flame.

b. Remove grease, fungus, and dirt with a clean lint-free cloth dampened with solvent (C261).

c. Remove dirt from electrical terminals with a bristle brush (C62).

d. Clean corroded contact pins and spring tabs with a pencil eraser, on carbon pile regulators only.

9-74. Inspection — Voltage Regulator.

a. Visually inspect regulator case for physical damage that could impair normal operation of the unit (cracked case, damaged or corroded contact pins, loose terminals, etc.).

b. Check for secure mounting of regulator.

c. For regulators with separate base, inspect spring tabs for security and condition.

9-75. Adjustment — Voltage Regulator.

NOTE

Electrical components normally depend upon a constant voltage supply from the generator. The generator voltage output is controlled by the voltage regulator which requires precision adjustment as follows:

a. Run aircraft engine at normal RPM/percent.

b. Set BAT switch to ON position.

c. Set GEN switch to ON position.

NOTE

Adjust each voltage regulator independently with other generator(s) turned off.

d. Close (on) all circuit breakers. Ensure all instruments and communications and navigation equipment are on. This will provide a load for the aircraft DC bus.

NOTE

An AN/USM-451 voltmeter or equivalent with a DC voltage scale accuracy of +/- one percent should be used. If a +\- one percent voltmeter is not available, and AN\USM-223 or equivalent multimeter may be used. However, the voltage regulator should be readjusted using an AN/USM-451 or equivalent voltmeter at the earliest possible time.

e. Connect the positive prober of a voltmeter to any convenient point on the battery/essential bus. Connect the negative probe to a convenient aircraft ground.

f. Read and record the voltage.

g. Adjust the voltage regulator according to the seasonal average high (ambient ground level) temperature settings in Table 9-4.2.

h. Tum off an instruments and communications and navigation equipment The DC bus voltage reading should be the same as in step f. above. If the aircraft DC voltage varies more than +/0.5 volt between the two readings, shut off aircraft engine (refer to TM 551520-210-10) and replace regulator.

TABLE 9-4.2. Voltage Regulator Adjustment Settings.

SEASONAL AVERAGE HIGH (AMBIENT GROUND LEVEL) TEMPERATURE	VOLTAGE REGULATOR SETTING (VOLTS)
Above 80'F (26'C)	27.0 +/- 0.2
Between 32'F (0'C) and	28.0 +/- 0.2
Below 32'F (0'C)	2 85-F (26'C)

NOTE

On standby/Auxiliary 28 VDC electrical system, adjust voltage regulators one volt lower than normal system.

9-76. Removal Voltage Regulator.

a. Ensure that all electrical power is off. Disconnect wires from terminal board of regulator.

b. Unlock snap clamps and remove regulator from base. For regulators without base, remove nuts and washers and remove regulator from shelf.

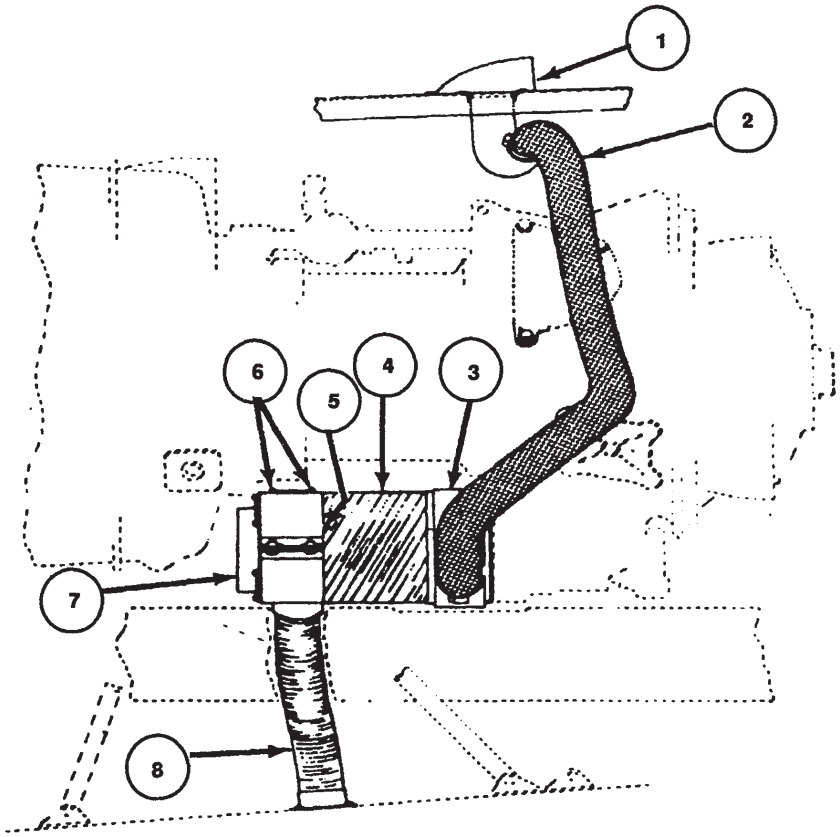

1.	Intake Fairing and Duct	5.	Outlet Shroud
2.	Flexible Hose	6.	Locating Screws
3.	Inlet Shroud	7.	End Cover
4.	Starter Generator	8.	Outlet Duct

Figure 9-2.1.2. Standby Generator (Starter Generator)

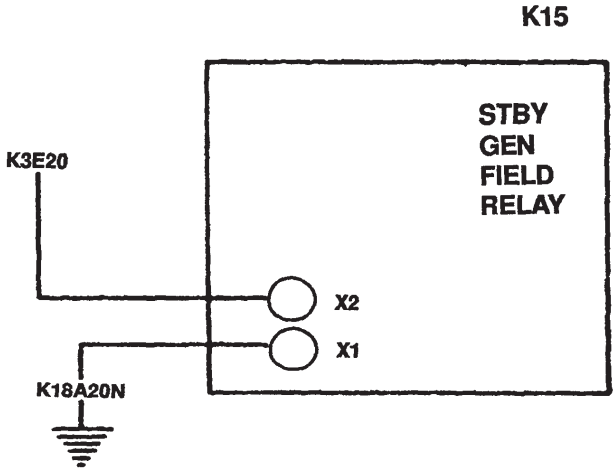

Figure 9-2.2. Starter Generator Wiring

Page 9-38, Including Figure 9-2.3, has been deleted.

9-77. Repair or Replacement - Voltage Regulator. Other than repositioning spring tabs by bending them a small amount in the direction opposite from which contact pins on regulator applies pressure, no other repairs are authorized.

9-78. Installation - Voltage Regulator.

a. Ensure that all electrical power is off.

b. Inspect and clean mounting surface in order to ensure good electrical bond.

c. Position regulators on mounting base and lock snap clamps. For regulators without separate base, insert regulator studs through mounting holes and secure with washers and nuts.

d. Reconnect aircraft wires to terminals F+, L+, and L-. Install jumper with legs suitable for the #10 regulator studs between terminals G+ and L+.

e. Adjust voltage regulator, refer to paragraph 9-75.

9-79. GENERATOR FIELD RELAY.

9-80 Description - Generator Field Relay. Helicopters prior to S/N 66-746 have a field control relay (K7) for only the main generator system located in aft electrical compartment. The above the subsequent serial numbered helicopters have two generator field control relays in the aft electrical compartment. The field control relay in the main generator system opens the shunt field circuit between the voltage regulator and the generator whenever the over-voltage relay closes the circuit to the trip coil of the field control relay. The tripped field control relay opens the circuit to SW terminal of the main generator reverse current relay. Once tripped, the generator field control relay can be reset by placing the generator switch in the RESET position. The standby generator field control relay (K15) is a different type than that in the main generator system. The purpose of the standby generator field control relay is to open the standby generator shunt field circuit whenever the coil is energized. Power is applied to the coil whenever the starter relay is energized by pressing the start switch. The shunt field circuit is completed through the relay when the start switch is released. Refer to paragraphs 9-5 through 9-11 for maintenance procedures.

9-80.1 Deleted.

9-81. REVERSE CURRENT RELAY.

9-82. Description - Reverse Current Relay. Two reverse current relays (K5 and K23) are mounted in the aft electrical compartment. Each is a part of two separate generator systems. Its purpose is to automatically connect and disconnect its own generator to or from the dc bus. Automatic operation of the reverse current relay is possible only when generator voltage is applied to the SW terminal of the unit. Automatic connection of the generator to the dc bus is accomplished only when the following conditions of the generator voltage are satisfied: the polarity is correct, a minimum of 22 to 24 volts dc is attained, and voltage at GEN terminal of reverse current relay exceeds voltage at its BAT terminal by approximately 0.5 volt. Automatic disconnection of the generator from the dc bus is accomplished by reverse current through the reverse current relay when generator voltage decreases below the voltage of another source connected to the bus. Refer to paragraphs 9-5 through 9-11 for maintenance procedures.

9-82.1 Deleted.

9-83. BUS CONTROL RELAY.

9-84. Description - Bus Control Relay. Operation of the control relay (K4) is controlled through the IND terminal of the main generator reverse current relay. Closing of the reverse current relay supplies power from the main generator to the coil of the bus control relay. With this coil energized the following events happen. The contacts between B2 and B3 terminals open to remove power from the DC GENERATOR segment on the caution panel to turn light off. The contacts between A2 and A1 terminals close to allow main generator voltage to energize nonessential bus relay. While the contacts between D2 and D3 terminals open to disconnect stand by generator power form the SW terminal of the reverse current relay. When the main generator reverse current relay opens, the buss control relay coil is not energized; it moves to its spring loaded position. This position supplies 28 Vdc to illuminate the DC GENERATOR segment on the caution panel and removes 28 Vdc from the nonessential bus relay coil which results in nonessential bus disconnecting from the main bus. Power from the external power supply closes the nonessential relay through the disengaged bus control relay. Refer to paragraphs 9-5 through 9-11 from maintenance procedures.

9-85. OVERVOLTAGE RELAY.

N O T E

The solid state voltage regulator is protected from over voltage and over current, by a manualy reset relay on the voltage regulator. When either condition trips the relay, the affected generator cannot be reset from the cockpit. The reset can be accomplished when the aircraft is on the ground with access to the voltage regulators

9-86. Description - Overvoltage Relay. The overvoltage relay (K6) is located in the aft electrical compartment. Voltage from the main generator is applied to the coil of the overvoltage relay only when main generator switch is ON. The over voltage relay contacts are normally open, but 31-33 volts across its coil from the main generator will close the relay which connects power from the bus to the trip coil of the main generator field control relay. Refer to paragraphs 9-5 through 9-11 for maintenance procedures.

9-87. NONESSENTIAL BUS RELAY.

9-88. Description— Nonessential Bus Relay. The nonessential bus relay (K2) is mounted in the aft electrical compartment. The nonessential bus relay is an electrically operated switch between the main bus bar and nonessential bus. It is operated by power from external power receptacle when external power is supplied. Power from the main generator will also operate the nonessential bus relay through the bus control relay when main generator reverse current relay closes. Placing the nonessential bus switch in the manual position will also allow standby generator or battery power to close the relay. Refer to paragraphs 9-5 through 9-11 for maintenance procedures.

SECTION II. ALTERNATING CURRENT POWER DISTRIBUTION SYSTEM

NOTE

Power loading charts and detail system wiring diagrams are contained in Appendix F. Aviation Unit Maintenance activities shall request AVIM for electrical system repairs in accordance with the Maintenance Allocation Charts Appendix B.

9-89. ALTERNATING CURRENT POWER DISTRIBUTION SYSTEM.

9-90. Description — Alternating Current Power Distribution System. The alternating current power distribution system provides all secondary power (115 Vac) for operation of the ac instruments and avionics systems.

9-91. COMMON ELECTRICAL COMPONENTS (AC).

9-92. Description — Common Electrical Components (AC). Common electrical components consist of the miscellaneous electrical components, circuit breakers, and control panels. Refer to paragraphs 9-5 through 9-25 for description and maintenance procedures. The AC circuit breaker panel is located on the right side of pedestal base.

9-93. INVERTER SYSTEM.

9-94. Description— Inverter System. a. The inverter system is a dual system consisting of a main and spare inverter. The units are interchangeable and are rated at 250 VA. They produce 115 Vac with a frequency response of 400 Hz. The system is comprised of the main inverter (D1), spare inverter (D2), main inverter power relay (K35) spare inverter power relay (K36), inverter relay (K27), ac failure relay (K8), ac power panel (A2, includes inverter switch (S39) and AC VM selector switch (S11), ac voltmeter (M3), 115 to 28 Vac autotransformer (T1), and the power factor correction network. The inverter system is powered from the 28 Vdc essential bus and is protected by the MAIN INVTR PWR, SPARE INVTR PWR, and INVTR CONTROL circuit breakers.

b. With the inverter switch (S39) positioned to MAIN, dc power from the 28 Vdc essential bus is routed through the main inverter power relay to the main inverter. The ac output of the main inverter is routed through the inverter relay to the autotransformer and various ac instrument circuit breakers. With the inverter switch positioned to SPARE, dc power from the 28 Vdc essential bus is routed through the spare inverter power relay to the spare inverter. The ac output of the spare inverter is routed through the inverter relay to the autotransformer and various ac instrument and avionics circuit breakers. The autotransformer reduces 115 Vac to 28 Vac for instrument power,

9-95. Functional Test — Inverter System. a. Open all circuit breakers and place all switches to their OFF or NORMAL positions.

b. Connect a 28 Vdc power source to the external power receptacle (J97). Energize power source.

c. Close the MAIN INVTR PWR, SPARE INVTR PWR, INVTR CONT, CAUTION LIGHTS, J2 CMPS IND (applicable only on helicopters prior to S/N 66-16307), POWER FACTOR CORRECTION, and all ac circuit breakers in the pedestal breaker panel. Check that INST INVERTER caution light illuminates.

d. Position inverter switch (S39) to MAIN ON. Check that main inverter and all ac instruments are on and INST INVERTER light is extinguished.

e. Select each phase on the ac voltmeter and check that voltmeter indicates 115 ±3 Vat, on each phase when dc bus voltage is 28 volts.

f. Position inverter switch (S39) to OFF and check that INST INVERTER light illuminates.

NOTE

When inverter switch (S39) is moved from MAIN ON to OFF, the ac bus voltages decrease gradually because the buses remain connected to the main inverter output through the inverter relay contacts. If the MASTER CAUTION light is reset during the time period in which the main inverter is still decreasing in speed, false MASTER CAUTION and INST INVERTER indications may occur.

g. Position inverter switch (S39) to SPARE ON and check that ac voltmeter indicates 115 ±3 Vac on each phase.

NOTE

When inverter switch (S39) is moved from SPARE ON to OFF, the ac bus voltages will drop off immediately from the spare inverter output by the inverter relay.

9-96. Troubleshooting — Inverter System. Use table 9-5 and perform checks as necessary to isolate trouble. In the following table, tripped circuit breakers and burned-out indicator lamps are omitted from indications of trouble. Such trouble is usually easily detected and corrected. Broken wiring is always a probable cause of circuit malfunction or failure and has not been included. (See figure F-21.)

NOTE

Before you use this table, be sure you have performed all normal operational checks.

Table 9-5. Troubleshooting Inverter System

CONDITION

TEST OR INSPECTION

CORRECTIVE ACTION

1. Main inverter fails to operate.

STEP 1. With inverter switch (S39) positioned to MAIN, check for 28 Vdc essential bus voltage on terminals 1 and 2 of switch.

Replace switch if voltage is not present on terminal 1 (paragraph 9-5).

STEP 2. Ensure that actuating voltage is present across terminals X1 and X2 and that 28 Vdc essential bus voltage is present at terminal Al of main inverter power relay (K35). Check for voltage at terminal A2.

Replace main inverter power relay if voltage is not present at terminal A2 (paragraph 9-5).

STEP 3. Check for 28 Vdc essential bus voltage at pins F and G of main inverter connector (P191). Ensure that ground potential is present at pin E.

Replace main inverter (D1) if voltage is present on pins F and G of connector (paragraph 9-97).

2. Spare inverter fails to operate.

STEP 1. With inverter switch (S39) positioned to SPARE, check for 28 Vdc essential bus voltage on terminals 2 and 3 of switch.

Replace switch if voltage is not present on terminal 3 (paragraph 9-5).

Table 9-5. Troubleshooting Inverter System (Cont)

CONDITION

TEST OR INSPECTION

CORRECTIVE ACTION

STEP 2. Ensure that actuating voltage is present across terminals X1 and X2 and that 28 Vdc essential bus voltage is present at terminal A1 of spare inverter power relay (K36). Check for voltage at terminal A2.

Replace spare inverter power relay if voltage is not present at terminal A2 (paragraph 9-5).

STEP 3. Check for 28 Vdc essential bus voltage at pins F and G of spare inverter connector (P192). Ensure that ground potential is present at pin E.

Replace spare inverter (D2) if voltage is present on pins F and G of connector (paragraph 9-97).

3. Inverter (D1 or D2) operates but no voltage to instruments.

STEP 1. Check continuity of inverter relay (K27) contacts; terminals A2 to A3 and B2 to B3 for main inverter and terminals A1 and B1 to B2 for spare inverter (relay actuated for spare inverter operation).

Replace inverter relay if defective (paragraph 9-5).

STEP 2. Check for 115 Vac output from inverter at inverter relay terminals A3 and B3 (for main inverter) and terminals A1 and B1 (for spare inverter).

Replace inverter (D1 and D2) if defective (paragraph 9-97).

4. Improper inverter output voltage or frequency.

STEP 1. Check for proper input voltage to inverter.

Correct primary voltage if low (paragraph 9-75).

STEP 2. Check inverter output voltage and frequency with voltmeter and frequency meters.

a. Frequency out of limits. Replace inverter (paragraph 9-102).

b. Low or high voltage. Adjust inverter output voltage (paragraph 9-101).

c. Unable to adjust inverter output voltage Replace inverter (paragraph 9-102),

Page 9-44, Including Table 9-5.1, has been deleted.

9-97. INVERTER.

9-98. Description - Inverter. The main and spare 115 Vac, 400 Hz, 250 VA, 3 phase inverter are interchangeable. These units are located in the aft electrical compartment on helicopters through serial number 62-12366. On helicopters serial number 63-8738 and subsequent the inverters are located in the nose electrical compartment. All three phases of the inverter are loaded equally as far as is practicable. Since loads are primarily inductive in nature, power factor correction capacitors are mounted in the compartment with the inverters to maintain a power factor of 0.97 (lag) under normal load.

9-99. Cleaning - Inverter. a. Remove moisture and loose dirt with a clean, soft cloth.

WARNING

Dry cleaning solvent is flammable and its fumes are toxic. Provide adequate ventilation. Do not use near a flame.

b. Remove grease, fungus, and dirt, with a clean, lint-free cloth dampened with solvent (C261).

c. Remove dirt from electrical connectors with a bristle brush (C62).

9-100. Inspection - Inverter.

a. Inspect case for cracks or damage.

b. Inspect electrical connectors for broken pins or cracked connector inserts.

c. Check for bonding and security of mounting.

9-101. Adjustment - Inverter.

N O T E

To properly conduct the inverter check, apply a regulated 28 Vdc external power source or ground run the helicopter to assure an adequate source of dc power for inverter operation. Do not use helicopter battery power.

N O T E

Make sure aircraft AC voltmeter indicates zero volt with no power applied to aircraft. If it does not, turn "zero" adjusting screw as required.

a. Turn on inverter and actuate all ac circuits to produce maximum demand on inverter.

b. Using multimeter (AN/PSM-6A, or equivalent) and frequency meter (JTB Model 33FS, or equivalent), check output voltage and frequency at the 115 Vac bus (engine vibration receptacle (J115) or other convenient monitoring point).

NOTE

If aircraft AC voltmeter does not indicate 115 ±3V AC, replace voltmeter.

c. If the output voltage is 115 ±2.5 Vat, and the frequency is between 380 and 420 Hz, no adjustment is necessary.

CAUTION

During removal and reinstallation of AC voltmeter retain and reinstall AC voltmeter terminal covers.

d. If the output voltage is above or below the limits prescribed in the preceding step, proceed as follows: Turn off dc power to inverter. Loosen hexhead jam nut securing adjustment screw.

e. Close all AC circuit breakers. Actuate all AC circuits. Turn on inverter power. Connect multimeter and frequency meter at one of the test points described in step b. and note reading. Turn inverter output adjustment screw clockwise to increase or counterclockwise to decrease inverter output. Nominal setting of 115 volts at full output load should produce an output frequency within limits of 380 to 420 Hz.

9-102. Removal - Inverter.

a. Ensure that all electrical power is OFF.

b. Disconnect electrical cable and protect connectors with cap or electrical tape (C270).

c. Remove mounting bolts and lift inverter from compartment.

9-103. Repair or Replace - Inverter. Repair connectors, replace missing mounting bolts. Replace unit for any of the following conditions: Excessive vibration, overheating, unusually noisy and for pitting and grooving of the brush area on the commutator and/or slip rings. (Refer to TM 11-61 25-220 -20.)

9-104. Installation - Inverter.

a. Ensure all electrical power is off.

N O T E

When installing inverter P/N PU543A/B two mount bolts may be installed from the bottom up.

NOTE

Check that inverter is set to operate using the pin connector. (Refer to TM 11-6125-220-20.)

b. Carefully position and secure inverter in compartment with mounting bolts.

c. Remove caps or electrical tape from plugs and receptacles.

d. Connect electrical connectors to the inverter.

9-105. MAIN INVERTER POWER RELAY.

9-106. Description - Main Inverter Power Relay. The main inverter power relay (K35) is located in the aft electrical compartment on helicopters prior to S/N 62-12366 and in the nose compartment on helicopters S/N 62-12366 and subsequent. The relay is used as a remote controlled switch. When the relay is energized, 28 Vdc is routed from the essential bus through the relay to the main inverter. Refer to paragraphs 9-5 through 9-11 for maintenance procedures.

9-107. SPARE INVERTER POWER RELAY.

9-108. Description - Spare Inverter Power Relay. The spare inverter power relay (K36) is located in the aft electrical compartment on helicopters prior to S/N 62-12366 and in the nose compartment on helicopters S/N 62-12366 and subsequent. The relay is used as a remote controlled switch. When the relay is energized, 28 Vdc is routed from the essential bus through the relay to the spare inverter. Refer to paragraphs 9-5 through 9-11 for maintenance procedures.

9-109. INVERTER RELAY.

9-110. Description - Inverter Relay. The inverter relay (K27) is used as a double-pole, double-throw remote controlled switch. The relay is energized by 28 Vdc when inverter switch (S39) is in SPARE position. When energized, 115 Vac from the spare inverter is routed through the relay to the ac systems. When de-energized, 115 Vac from the main inverter is routed through the relay to the ac systems. Refer to paragraphs 9-5 through 9-11 for maintenance procedure.

9-111. INVERTER FAILURE RELAY

9-112. Description - Inverter Failure Relay. The ac failure relay (K8) monitors the 115 Vat, phase C bus. When the bus is de-energized, the INST INVERTER caution panel segment will illuminate to warn the pilot that the 115 Vac bus is no longer energized. Refer to paragraphs 9-5 through 9-11 for maintenance procedure.

9-113. AC TRANSFORMER.

9-114. Description - AC Transformer. The ac transformer (T1), which is an autotransformer, reduces 115 Vac to 28 Vac for instrument power.

9-115. Cleaning - AC Transformer.

a. Remove moisture and loose dirt with a clean, soft cloth.

Warning

Dry cleaning solvent is flammable and its fumes are toxic. Provide adequate ventilation. Do not use near a flame.

b. Remove grease, fungus, and dirt with a clean, lint-free cloth dampened with dry cleaning solvent (C261).

9-116. Inspection-AC Transformer.

a. Inspect transformer for broken contact pins.

b. Inspect transformer case for damage.

c. Inspect for damaged insulation between pins.

d. Check for discoloration that would indicate internal shorting or excessive overload.

e. Check for security of mounting.

9-117. Removal-AC Transformer.

a. Ensure all electrical power is off.

b. Disconnect wiring from transformer and protect wire ends with tape (C270). Tag wires for proper identification.

c. Remove mounting screws and lift transformer from compartment.

9-118. Repair or Replacement -AC Transformer.

a. Replace transformer if case is damaged or discolored.

b. Replace transformer if insulation between pins is damaged or broken, or contact pins are broken.

c. Repair is limited to tightening or properly installing any loose or improperly installed mounting hardware.

9-119. Installation -AC Transformer.

a. Ensure all electrical power is off.

b. Position transformer in compartment and secure with mounting screws.

c. Remove tape from wire ends and connect tagged wires to transformer.

9-120. ENGINE VIBRATION METER RECEPTACLE.

9-121. Description - Engine Vibration Meter Receptacle. The engine vibration meter receptacle, powered from the 115 Vac essential bus, is used as source of 115 Vac power for the vibration meter during engine vibration tests. It is also used as a convenient point to monitor ac voltage from the 115 Vac essential bus during functional tests or troubleshooting. Refer to paragraphs 9-5 through 9-11 for maintenance procedures.

Pages 9-48 through 9-51, including paragraphs 9-121.1 through 9-121.17.1 and table 9-5.2, have been deleted.

regulator receives its voltage sensing signals from the alternator terminals. Current transformer (T4) provides current sensing signals to the control unit. The Alternator/External Power Relay (K70) selects either the alternator or external power receptacle, for power to the AC bus. An alternator switch (S250) is provided on the AC power control panel to provide manual control of the alternator. A warning light is provided on the caution panel to indicate when the alternator relay (K70) is not closed.

9-121.12. Functional Test — Alternator. Perform functional test of alternator system as follows:

NOTE

Before performing functional test of alternator system, check operation of external AC power system.

a. Start the helicopter engine and increase engine speed to approximately 6300 rpm. The ALTERNATOR and AC/DC CONVERTER caution lights should extinguish.

b. Select each ALT phase on the AC voltmeter and check that voltmeter indicates 120±VAC on each phase.

c. Place ALT switch in "OFF/RES". The ALTERNATOR and AC/DC CONVERTER caution lights should illuminate.

d. Place ALT switch to "ON'". The ALTERNATOR and AC/DC CONVERTER caution lights should extinguish.

9-121.13. Troubleshooting — Alternator System. Use Table 9-5.2 and perform checks as necessary to isolate trouble. In the following table, tripped circuit breakers and burned-out indicator lamps are omitted from indications of trouble. Such trouble is usually easily detected and corrected. Broken wiring is always a probable cause of circuit malfunction or failure and has not been included. (See Figure F-21.1.)

NOTE

Before you use this table, be sure you have performed all normal operational checks.

Table 9-5,2 Troubleshooting Alternator System

CONDITION
TEST OR INSPECTION
CORRECTIVE ACTION

1. ALTERNATOR light on caution panel not illuminated prior to engine start-up. Bus is energized by battery or external power, and caution light circuit breaker is closed.

   Determine if master caution panel (A4) is defective by disconnecting plug P24 from caution panel and checking for DC voltage between C(+) and U(–). No voltage should be present. Replace lamps in ALTERNATOR segment and reconnect plug (P24).

   Replace master caution panel if light still does not illuminate (paragraph 9-12).

2. ALTERNATOR light on caution panel does not go out after engine start-up.

   Determine if master caution panel (A4) is defective by disconnecting plug P24 from caution panel and checking for DC voltage between C(+) and U(—). If voltage is present, replace master caution panel (paragraph 9-1 2).

   Replace alternator relay (K70) if light still does not go out (paragraph 9-5].

3 No output from alternator.

   STEP 1. Determine if voltage is present on terminals A3, B3, and C3 of Alternator Relay (K70).

   Replace alternator (G2) if no voltage is present.

Table 9-5.2 Troubleshooting Alternator System (Cont)

CONDITION
TEST OR INSPECTION
CORRECTIVE ACTION

STEP 2. If alternator voltage is 120 ± 2 Vac and 400 ± 10 Hz, check for 28 VDC on Alternator relay connector P407 Pins P and J. Check continuity of jumper between P407 K and X and jumper.

Replace alternator relay if voltage is correct.

STEP 3. If alternator voltage is low or no voltage is present on alternator relay connector P407 Pin P or J.

Replace alternator control unit (VR5).

STEP 4. Check alternator switch for proper operation.

Replace alternator switch if defective (paragraph 9-5).

STEP 5. Determine if current transformer (T4) is defective.

Replace current transformer if defective (paragraph 9-5).

9-121.14. EX AC ALTERNATOR.

9-121.14.1 Description — AC Alternator. The AC Alternator (G2) is mounted on drive quill on the forward side of the main rotor transmission. Its capacity is rated at 30 KVA and its voltage is controlled by a voltage regulator which is part of the alternator system. The AC alternator is driven at twice the speed of the engine output shaft and has to be turned within a specific voltage range of speed to furnish rated current at normal regulated voltage.

9-121.14.2. Cleaning — AC Alternator.

a. Remove moisture with a clean, soft cloth.

WARNING

Dry cleaning solvent is flammable and its fumes are toxic. Do not use near a flame. Provide adequate ventilation.

b. Remove grease, fungus, and dirt with a clean lint-free cloth dampened with solvent (C261).

c. Remove dirt from electrical terminals with a bristle brush (C62).

9-121.14.3. Inspection — AC Alternator.

a. Visually inspect alternator for damage.

b. Check terminals for damage and terminal board to ensure that it is not warped or cracked.

c. Check drive splines for excessive wear by rocking armature back and forth.

9-121.14.4. Removal — AC Alternator.

a. Open forward transmission fairing.

b. Tag wires to identify for reinstallation and disconnect from alternator.

c. Remove nuts and washers and pull alternator free of transmission drive. (Figure 9-2.3).

9-121.14.5. Repair or Replacement — AC Alternator. No repairs are authorized.

9-121.14.6 Installation — AC Alternator.

a. Apply light coat of grease (C161) on alternator shaft. Place gasket into position. Align alternator with transmission drive, and slide alternator into drive spline.

b. Position alternator on studs with terminals centered on helicopter centerline and tighten retaining nuts to attach alternator to drive pad.

c. Connect wires to alternator terminals.

d. Reinstall terminal board cover.

9-121.15 EX ALTERNATOR CONTROL UNIT

9-121.15.1. Description — Alternator Control Unit. The alternator control unit (VR5) is located in the left side of the cabin overhead. Its

SECTION III. STARTING SYSTEM.

9-122. STARTING SYSTEM.

9-123. Description - Starting System. The starting system requires 24 Vdc to activate the starter portion of the starter-generator during the starting cycle. The 24 Vdc power may be supplied by the battery or by an external power source. The starting system consists of the starter portion of the starter-generator (G6) and the starter relay (K3).

9-124. Functional Test - Starter System.

a. Disconnect wires K4B4 and K4D4 from terminal C of starter-generator.

b. Position starter-generator switch (S70) to START.

c. Close STARTER RELAY circuit breaker.

d. Actuate starter switch (S6) on pilot collective stick and check that starter relay (K3) closes and that voltage is present at the ends of the disconnected wires.

e. Position starter-generator switch (S70) to STBY GEN.

f. Actuate starter switch (S6) and check that starter relay (K3) does not close.

g. Position starter-generator switch (S70) to START.

NOTE

Starter switch (S77) is not installed on helicopters S/N 68-15214 and subsequent.

h. Actuate starter switch (S77) on copilot collective stick and check that voltage is present at the ends of disconnected wires.

i. Position starter-generator switch (S70) to STBY GEN.

j. Actuate starter switch (S77) and check that starter relay (K3) does not close.

k. Open STARTER RELAY circuit breaker.

l. Reconnect wires K4B4 and K4D4 to terminal C of starter-generator.

9-125. Troubleshooting - Starter System. Use table 9-6 and perform checks as necessary to isolate trouble. In the following table, tripped circuit breakers and burned-out indicator lamps are omitted from indications of trouble. Such trouble is usually easily detected and corrected. Broken wiring is always a probable cause of circuit malfunction or failure and has not been included. (See figure F-22.)

NOTE

Before you use this table, be sure you have performed all normal operational checks.

Table 9-6. Troubleshooting Starter System

CONDITION

TEST OR INSPECTION

CORRECTIVE ACTION

1. Starter (G6) fails to operate when starter switch (S6 or S77) is depressed with starter-generator switch (S70) in START position.

STEP 1. Ensure that dc essential bus voltage is present and determine if STARTER RELAY circuit breaker is defective.

Replace circuit breaker if defective (paragraph 9-12).

Table 9-6. Troubleshooting Starter System (Cont)

CONDITION

TEST OR INSPECTION

CORRECTIVE ACTION

STEP 2. Check starter-generator switch (S70) for proper operation.

Replace switch if defective (paragraph 9-5).

STEP 3. With starter switch (S6) depressed, check for relay actuating voltage at terminal X2 of starter relay (K3).

Replace switch (S6) if defective (paragraph 9-5).

STEP 4. With starter switch (S6) depressed, check for main dc bus voltage at terminal A2 of starter relay (K3),

Replace relay if defective (paragraph 9-5).

STEP 5. Check for excessively worn starter-generator brushes.

Replace brushes as required (paragraph 9-67).

2. Starter fails to produce sufficient rpm during start cycle.

STEP 1. Check for excessive wear to armature bearings.

Replace starter if bearings are worn excessively (paragraph 9-68.3).

STEP 2. Check for low battery power.

Charge battery (TM 11-6140-203-14-2) or connect external power source.

3. Engine rotates when battery is turned on.

STEP 1. Check for defective starter relay (K3).

Replace relay if defective (paragraph 9-5).

STEP 2. Check for defective starter switch (S6).

Replace starter switch if defective (paragraph 9-5).

9-126. STARTER GENERATOR.

9-127. Description – Starter Generator. The starter generator (G6) is mounted on the aft side of the engine accessory drive gearbox. it serves to drive the engine compressor rotor during the start cycle and also serves as a 300 amp, engine driven standby generator at normal engine speeds. Refer to paragraph 9-67 for maintenance procedures.

9-128. STARTER RELAY.

9-129. Description — Starter Relay. The starter relay is located in the aft electrical compartment. This unit is an electrically operated switch between the main bus bar and the starter-generator. It is energized when the starter switch on the pilots or copilots stick is depressed. Refer to paragraphs 9-5 through 9-11 for maintenance procedures.

SECTION IV. IGNITION SYSTEM.

9-130. IGNITION SYSTEM.

9-131. Description — Ignition System. Ignition to the power plant is provided by the ignition unit (22), furnished with and attached to the engine. This unit provides a continuous ignition arc during engine start cycle. The start fuel solenoid valve (L1) located on the engine also operates during this cycle to direct fuel to the starting fuel nozzle during engine start. The circuits are energized when MAIN FUEL switch (S38) located on the engine control panel (A3) and ignition keylock switch located on right side of pedestal are placed to ON and the starter switch (S6) is depressed.

9-132. Functional Test — Ignition System.

NOTE

Ensure that wire K3D20 is disconnected at starter relay (K3) and that terminal is protected to prevent activation of engine.

a. Prior to helicopter Serial No. 66-16034, accomplish the following:

(1) Close IGNITION SYSTEM IGNITER SOL circuit breaker. Position MAIN FUEL switch (S38) and starting fuel switch (S88) to ON and ignition keylock switch to OFF. Actuate pilot starter switch (S6) and check that ignition unit (22) and start fuel solenoid valve (L1) do not operate.

(2) Repeat step (1) with ignition keylock switch ON. Check that both ignition unit (22) and solenoid valve (L1) operate.

(3) Actuate copilots starter switch (S77). Check that ignition unit and start fuel solenoid valve are both operating.

(4) Position starting fuel switch (S88) to OFF. Actuate pilots starter switch (S6) and check that ignition unit operates.

(5) Repeat step (4) using copilots starter switch (S77).

(6) Position starting fuel switch (S88) to ON. Place MAIN FUEL switch (S38) to OFF. Actuate pilots starter switch (S6) and check that neither the ignition nor the solenoid valve operates.

(7) Repeat step (6) using copilots starter switch (S77). Reconnect starter wires.

b. For helicopter Serial No. 66-16034 and subsequent, accomplish the following:

(1) Close IGNITION SYSTEM IGNITER SOL circuit breaker. Position MAIN FUEL switch (S38) to ON and ignition keylock switch to OFF. Actuate pilots starter switch (S6) and check that ignition unit (Z2) and start fuel solenoid valve (L1) do not operate.

(2) Repeat step (1) with ignition keylock switch ON. Check that both ignition unit and solenoid valve operate.

(3) Actuate copilots starter switch (S77). Check that ignition unit and start fuel solenoid valve are both operating.

(4) Position MAIN FUEL switch (S38) to OFF. Actuate pilots starter switch (S6) and check that neither the ignition unit nor the solenoid valve operates.

NOTE

Copilots starter switch (S77) is not installed on helicopters S/N 68-15214 and subsequent.

(5) Repeat step (4) using copilots starter switch (S77). Reconnect starter wires.

NOTE

For additional maintenance information, refer to Chapter 4.

9-133. Troubleshooting — Ignition System. Use table 9-7 and perform checks as necessary to isolate trouble. In the following table, tripped circuit breakers are omitted from indications of trouble. Such trouble is usually easily detected and corrected. Broken wiring is always a probable cause of circuit malfunction or failure and has not been included. (See figure F-23).

NOTE

Before you use this table, be sure you have performed all normal operational checks.

Table 9-7. Troubleshooting Ignition System

CONDITION

TEST OR INSPECTION

CORRECTIVE ACTION

1. Igniter or igniter solenoid valve fails to operate when starter switch is depressed.

STEP 1. Ensure that ignition keylock switch is ON and proper voltage is present on 28 Vdc bus. Determine with a voltmeter if the IGNITION SYSTEM & IGNITER SOLENOID circuit breaker or keylock switch is defective (paragraph 9-12, 9-5).

Replace circuit breaker or switch if defective (paragraph 9-12, 9-5).

STEP 2. Check MAIN FUEL switch (S38) for proper operation.

Replace switch if defective (paragraph 9-5).

STEP 3. On helicopters prior to S/N 66-16034, check start fuel switch (S88) for proper operation.

Replace switch if defective (paragraph 9-5).

STEP 4. Check starter switch (S6) for proper operation.

Replace switch if defective (paragraph 9-5).

STEP 5. Check ignition unit for proper operation.

Replace ignition unit if defective (paragraph 9-1 34).

STEP 6. Check start fuel solenoid valve for proper operation.

Replace solenoid if defective (paragraph 9-5).

9-134. IGNITION UNIT.

9-135. Description — Ignition Unit. The ignition unit is furnished with and attached to the engine. This unit provides a continuous ignition arc during the engine start cycle. Refer to TM 55-2840-229-23 for maintenance procedures.

9-136. START FUEL SOLENOID VALVE.

9-137. Description — Start Fuel solenoid Valve. The start fuel solenoid valve (L1) is installed on the engine and operates during the start cycle. It directs fuel to the starting fuel nozzles during engine start. Refer to TM 55-2840-229-23 for maintenance procedures.

SECTION V. LIGHTING PROVISIONS

9-138. LIGHTING PROVISIONS.

9-139. Description — Lighting Provisions. Lighting provisions include all equipment necessary for the illumination of instruments and switches; also interior and exterior lighting used for night operation of the helicopter.

9-140. INTERIOR LIGHTS SYSTEM,

9-141. Description - Interior Lights System. Interior light circuits include the instrument lights, instrument secondary lights located on the glare shield, overhead console and pedestal panel lights, dome light, and cockpit lights. The EH-1H is equipped with three overhead mounted utility lights, one over each operator station.

9-142. COCKPIT LIGHTS.

9-143. Description — Cockpit Lights. The cockpit lights (1 9 and 128) are multiple-purpose utility lights designed to selectively provide red, white or blue-green illumination utilizing a narrow spotlight beam or a wide floodlight beam. Controls necessary to obtain operational modes of ON-OFF, dim-bright, spot-flood, and red, white or blue-green illumination are incorporated into the lamp body.

NOTE

An additional modified utility light is installed aft of DC circuit breaker panel for aircraft equipped with night vision goggle capability.

9-144. Cleaning – Cockpit Lights. Refer to paragraph 9-7 for cleaning procedures.

9-145. Inspection — Cockpit Lights. Inspect light for corroded lamp socket terminals, shorted or broken wires, cracked lens, burned out lamp bulbs, and improper bonding to ground.

9-146. Functional Teat — Cockpit Lights. a. Close COCKPIT LTS circuit breaker. Check that pilot and copilot utility lights are operational in each mode. (ON-OFF, Dim-Bright and Spot-Flood on both red and white (blue-green on NVG (Night Fix - Phase 1) modified UH-1H/V aircraft.)

b. Open COCKPIT LTS circuit breaker.

9-146.1. functional Test - Operator Utility Lights (figure F-24). Close CREW LIGHTS circuit breaker. Check that each of the three operator utility lights is operational in each mode, (ON-OFF, DIM-BRIGHT, and Spot-Flood on both red and white (blue-green on NVG (Night Fix - Phase 1) modified UH-1H/V aircraft.)

9-147. Troubleshooting — Cockpit Lights. Use table 9-8 and perform checks as necessary to isolate trouble. In the following table, tripped circuit breakers and burned-out bulbs are omitted from indications of trouble. Such trouble is usually easily detected and corrected. Broken wiring is always a probable cause of circuit malfunction or failure and has not been included. (See figure F-24.)

NOTE

Before you use this table, be sure you have performed all normal operational checks.

Table 9-8. Troubleshooting Cockpit Lights

CONDITION

TEST OR INSPECTION

CORRECTIVE ACTION

1. Switch fails to operate lights.

Use a multimeter to determine if switch or rheostat is defective.

Replace switch or rheostat if defective (paragraph 9-50).

2. One light dim or intermittent.

Check for proper circuit ground contact.

Rernove light and clean ground (paragraph 9-5).

Table 9-8. Troubleshooting Cockpit Lights (Cont)

CONDITION	TEST OR INSPECTION	CORRECTIVE ACTION
3. One light does not illuminate.	STEP 1. Check for corroded lamp socket.	**Clean terminals or replace light (paragraph 9-50).**

9-148. Removal – Cockpit Lights. a. Open COCKPIT LTS circuit breaker.

b. Remove mounting hardware, lift out light assembly, and disconnect light wire.

9-149. Repair or Replacemant — Cockpit Lights. Light assembly may be repaired by replacing damaged or defective component parts. If light case is damaged beyond repair, complete unit must be replaced.

9-150. Installation — Cockpit Lights. a. Connect light wire and install light assembly with mounting hardware.

b. Close COCKPIT LTS circuit breaker and check light for proper operation.

9-151. DOME LIGHTS.

9-152. Description — Dome Lights. The aft dome lights are designed to provide red or white illumination as selected by switch (S1) on the aft dome lights panel (A20). A rheostat (R21) on the panel controls off-on-dimming of the aft dome lights. On helicopters S/N 65-9565 through 66-16033, a forward dome light is installed and provides red or white illumination as selected by forward dome light switch (S35). On UH-1H/V aircraft modified for night vision goggles (NVG) (Night Fix-Phase 1), the forward domelight has been disconnected.

9-153. Cleaning — Dome Lights. Refer to paragraph 9-7 for cleaning procedure.

9-154. Inspection — Dome Lights. Inspect lights for corroded lamp socket terminals, cracked lens, burned out lamp bulbs, improper bonding to ground, and broken or shorted wires.

9-155. Functional Test — Dome Lights. a. Close DOME LTS circuit breaker. Position switch (S1) to RED, Rotate rheostat (R21) clockwise from OFF. Check that the three aft dome lights are full bright with (R21) in the full clockwise position.

b. Repeat step a. with switch (S1) positioned to WHITE.

NOTE

Step c. is not applicable to Serial No. 66-16034 and subsequent.

c. Check that forward dome light is operational for both RED and WHITE positions of switch (S35). NVG (Night Fix - Phase 1) modified aircraft will have the forward domelight disconnected.

d. Open DOME LTS circuit breaker.

9-156. Troubleshooting — Dome Lights. Refer to paragraph 9-147; procedure is the same.

9-157. Removal — Dome Lights. a. Open DOME LTS circuit breaker.

b. Remove mounting hardware, lift out light assembly, and disconnect light wires.

9-158. Repair or Replacement — Dome Lights. Light assembly may be repaired by replacing damaged or defective component parts. If case is damaged beyond repair, complete unit must be replaced.

9-159. Installation — Dome Lights. a. Connect light wires and install light assembly with mounting hardware.

b. Close DOME LTS circuit breaker and check light for proper operation.

9-160. INSTRUMENT, CONSOLE, AND PEDESTAL LIGHTS.

9-161. Description — Instrument, Console, and Pedestal Lights. The instrument, console, and pedestal lights are energized by the 28 Vdc essential bus and protected by INST SEC LTS, INST PANEL LTS, and CONSOLE & PEDESTAL LTS 5 ampere circuit breakers. Six rheostats on the instrument lights panel (A6) control off-on-dimming of pilot instrument, copilot instrument, engine instrument, pedestal, instrument secondary, and console lights.

9-161.1. 5-Volt Instrument Lighting System.

9-161.2. Description — The 5-Volt instrument lighting system consists of two 5-volt power supplies, a terminal board, and wire harness. The power supplies are located on either side of the lower left enclosure in the nose radio compartment. The pilot 5-volt power supply provides a lighting source for the ID-998/ASN Indicator. The copilot 5-volt power supply provides a lighting source for the AAU-32A Altimeter. The 5-volt power supplies are controlled by the pilot and copilot instrument light rheostats. Refer to paragraphs 9-5 through 9-11 for maintenance procedures.

9-161.3. Functional Test — 5-Volt Instrument Lighting System.

a. Pilot 5-volt power supply — close INST PANEL LIGHTS and PILOT 5V LIGHTS circuit breakers. Rotate pilot instrument panel lights rheostat R4 clockwise from OFF. Check that instrument light on ID-998/ASN Indicator comes on and increases in brightness with clockwise rotation of the rheostat. Brightness should vary in the same intensity as the other pilot instrument lights.

b. Copilot 5-volt power supply — close CO-PILOT 5V LIGHTS circuit breaker. Rotate the copilot's instrument lights rheostat RIO clockwise from OFF. Check that AAU-32\A Altimeter light comes on and increases in brightness with clockwise rotation of the rheostat. Brightness should vary in the same intensity as the other copilot instrument lights.

9-161.4 Troubleshooting — 5-Volt instrument Lighting System. Use table 9-4.2 and perform checks as necessary to isolate trouble. In the following table, tripped circuit breakers and burned-out indicator lamps are omitted from indications of trouble. Such trouble is usually easily detected and corrected. Broken wiring is always a probable cause of circuit malfunction or failure and has not been included. (See figure F-26.1)

N O T E

Before you use this table, be sure you have performed all normal operational checks.

Table 9-8.1 Troubleshooting 5-Volt Instrument Lighting System.

CONDITION TEST OF INSPECTION	**CORRECTIVE ACTION.**
1. Pilot or copilot instrument light rheostats fail to operate lights. Other instrument lights operating properly.	
STEP 1. Check for defective power supply.	**Replace power supply.**
2. Lights do not vary in brightness with same intensity as other instrument lights.	
STEP .1 Check for improper output voltage.	**Adjust potentiometer R27 (external control) on power supply to obtain correct brightness.**

9-161.5 Removal — 5-Volt Instrument Lighting Power Supplies.

a. Be sure all electrical power is OFF.

b. Disconnect electrical connector to power supply.

c. Remove screws securing power supply to mounting plate and lift power supply from compartment.

9-161.6 Installation — 5-Volt Instrument Lighting Power Supplies

a. Position power supply in compartment and install mounting screws.

b. Connect electrical connector to power supply.

NOTE

Aircraft modified for night vision goggles capability will contain an emergency lighting switch and guard in right hand overhead dc circuit breaker panel. When switch is in the normal position (guard closed) light will operate normally. With guard raised and switch activated, pilot/copilot instrument panel, console and pedestal lights will be inoperative.

9-161.7. Description — Night Vision Goggles (NVG) (Night Fix — Phase 1) Lighting System. The NVG lighting system consists of a glareshield extension (mounted on the glareshield), 5 cockpit lights (mounted on glareshield extension) and 3 post lights (mounted next to standby compass, pilots RMI and copilots RMI). The cockpit and post lights have been modified with blue-green lenses. In addition, the following have also been modified with blue-green lenses: Master Caution Panel segments, copilots crew light and all press-to-test lights. The Master Caution light, RPM Warning light and Fire Detection Warning light have been modified with blue-green lens covers. The instrument secondary lighting rheostat and circuit breaker have been reidentified as NVG.

9-162. Cleaning — Instrument, Console, and Pedestal Lights. Refer to paragraph 9-7 for cleaning procedure.

9-163. Inspection — Instrument, Console, and Pedestal Lights. Refer to paragraph 9-8 for inspection procedure.

9-164. Functional Test — Instrument, Console, and Pedestal Lights. a. Close INSTR PANEL LIGHTS circuit breaker. Rotate pilots instrument lights rheostat (R6) clockwise from OFF. Check that all instrument lights on the pilots side of the panel, including the standby compass and collective stick light, come on and increase in brightness with clockwise rotation of the rheostat.

b. Rotate engine instrument lights rheostat (R9) clockwise from OFF. Check that all engine instrument lights come on and increase in brightness with clockwise rotation of the rheostat.

c. Rotate the copilots instrument lights rheostat (RI O) clockwise from OFF. Check that all instrument lights on the copilots panel come on and increase in brightness with clockwise rotation of the rheostat.

d. Open INST PANEL LIGHTS circuit breaker.

e. Close CONSOLE PED LIGHTS circuit breaker. Rotate pedestal lights rheostat (R8) clockwise from OFF. Check that all edge lit panel lights on the pedestal come on and increase in brightness with clockwise rotation of the rheostat.

f. Rotate console lights rheostat (R6) clockwise from OFF. Check that all edge lit panel lights in the overhead console plus the aft dome lights panel and crew ICS panel lights come on and increase in brightness with clockwise rotation of the rheostat.

g. Open CONSOLE PED LIGHTS circuit breaker.

h. Close INST SEC LIGHTS (or NVG LIGHTS) circuit breaker.

i. Rotate instrument secondary lights rheostat (R5) or NVG lights rheostat (R5A) clockwise from OFF. Check that instrument secondary lights come on and increase in brightness with clockwise rotation of the rheostat.

j. Open INST SEC LIGHTS (or NVG LIGHTS) circuit breaker.

9-165. Troubleshooting — Instrument. Console, and Pedestal Lights. Refer to paragraph 9-147; procedure is the same. (See Figure F-25.)

9-166. Removal – Instrument, Console, and Pedestal Lights. Refer to paragraph 9-9 for removal procedure.

9-167. Repair or Replacement — Instrument, Console, and Pedestal Lights. Refer to paragraphs 9-10 and 9-24 for repair or replacement criteria.

9-168. Installation — Instrument, Console, and Pedestal Lights. Refer to paragraph 9-11 for installation procedure.

9-169. CAUTION LIGHT SYSTEM.

9-1700 Description – Caution Light System. The caution light system includes a master caution panel (A4) located in the pedestal and a master caution light (II 3) located on instrument panel. The caution panel contains a number of internally lighted capsules that illuminate when associated switches, located at different places in the helicopter, actuate to complete circuits thus indicating malfunctions in respective system. The panel is energized from 28 Vdc essential bus and protected by a 5 ampere circuit breaker located in the dc circuit breaker panel in the overhead console.

9-171. Functional Test – Caution Light System.

NOTE

The following paragraphs cover functional tests of all caution light circuits. All circuit breakers shall be open before making tests. The master caution light should illuminate each time a caution panel segment illuminates and shall be reset each time in readiness for another fault indication.

a. . Master Caution Panel.

(1) Apply external power to helicopter.

(2) Close CAUTION LIGHTS AND GOV CONT circuit breakers. Check that MASTER CAUTION light illuminates and that each caution light segment operates as follows:

Caution Light	ON/OFF Condition
ENGINE OIL PRESS	ON
*ENGINE ICING	OFF
*ENGINE ICE DETECTOR	ON
LEFT FUEL BOOST	ON
RIGHT FUEL BOOST	ON
**ENG FUEL PUMP	ON
***20 MINUTE FUEL	ON
AUX FUEL LOW	OFF
XMSN OIL PRESS	ON
XMSN OIL HOT	OFF
HYD PRESSURE	ON
INST INVERTER	ON
DC GENERATOR	ON
EXTERNAL POWER	ON
FUEL FILTER	OFF
GOV EMER	OFF
CHIP DET	OFF
ENGINE CHIP DET	OFF
ENGINE INLET AIR	OFF
IFF	OFF
EBX AC/DC CONVERTER	ON
EBX AC ALTERNATOR	ON
EBX INOP/ALQ-144	OFF
x FUEL BOOST	ON
x ECM ANTENNA	OFF

NOTE

***These caution lights not applicable on helicopters equipped with particle separator .**

NOTE

****ENG FUEL PUMP caution light will be illuminated only when a Hydra-Electric Company, P/N 40210, Cook Electric Co. P/N 575-1337, or Cook Electric Co. P/N 712-0063 fuel pump pressure switch is installed on the engine.**

NOTE

*****Light will remain OFF when fuel tanks are full.**

(3) Reset the master caution light. Test the lights using the test switch on the panel. Push the dim switch to DIM and release. Check that caution lights do not dim.

(4) Rotate pilots instrument lights rheostat (R4) clockwise from OFF. Again actuate the dim switch and check that lights dim and hold.

(5) Rotate rheostat (R4) counterclockwise to OFF and check that lights return to bright,

b. Engine Oil Pressure Light.

(1) Connect a pressure gun to the engine oil pressure switch and apply pressure. Check that ENGINE OIL PRESSURE segment extinguishes with increasing pressure at 27 ± 1 psi,

(2) Relieve pressure on engine oil pressure switch. Check that ENGINE OIL PRESSURE segment illuminates before 25 psi decreasing pressure (paragraph 8-60).

c. Engine Icing and Engine Ice Detector Lights. (Helicopters not equipped with particle separator).

(1) Connect test box, wired similar to that shown in figure 9-3, into the engine harness at the hot air valve and ice detector. (See figure F-30.)

(2) Position test switch to ENG OFF or ICING and close ANTI-ICE ENG circuit breaker, Check that PROBE DEICER test light (L1) is off. PROBE HEATER test light (L2) should remain on as long as power is applied to the system.

(3) Position hot air valve switch (S81) on the engine control panel to the closed position. Check that HOT AIR VALVE test light (L3) illuminates.

(4) Simulate the engine operating condition by positioning test switch to NORMAL. Check that the light (L1) remains off and the ENGINE ICE DET segment on the caution panel extinguishes, indicating the system is armed.

(5) Simulate icing condition by placing test switch in the ENG OFF or ICING position. Check that ENGINE ICING segment on the caution panel illuminates, indicating an icing condition in the engine and that test light (L1) illuminates, indicating power is applied to the probe deicing heater element.

CAUTION

Do not leave test switch in ENG OFF or ICING position for more than 10 seconds before returning it to the NORMAL position.

(6) Return test switch to NORMAL. Check that test light (L1) and the ENGINE ICING segment extinguish.

(7) Simulate a failure of the ice detector probe by placing test switch in ENG OFF or ICING position. After 11 to 18 seconds, check that test light (L1) and ENGINE ICING segment extinguish and that ENGINE ICE DET segment illuminates, indicating that the system is disarmed. This condition is similar to the engine off condition or to losing electric power to the ice detection system.

d. Left and Right Fuel Boost Lights.

(1) Disconnect wire Q42A20 from terminal board (TB38) terminal No. 2 at left hand fuel cell and check that LEFT FUEL BOOST segment extinguishes.

(2) Disconnect wire Q40A20 from terminal board (TB35) terminal No. 2 at right hand fuel cell and check that RIGHT FUEL BOOST segment extinguishes.

(3) Reconnect wires to correct terminals.

e. Engine Fuel Pump Light.

(1) Disconnect both pressure ports at the fuel pressure switch on the engine. Determine the

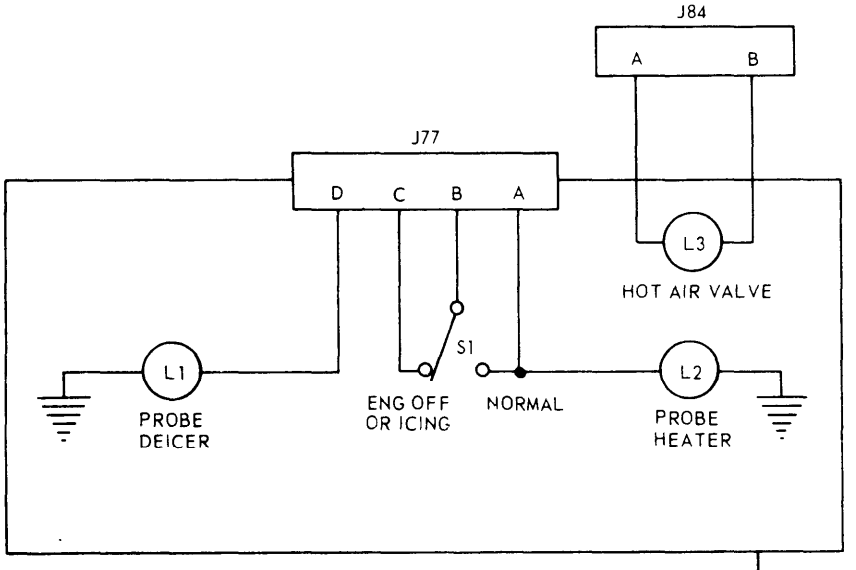

J77 — 4 Pin Receptacle, MS3102-14S-2P or Equiv.
J84 — 2 Pin Receptacle, MS3101-12S-3P or Equiv.
L1 — Any 28 Volt Lamp Not Exceeding 6 Amperes
S1 — Test Switch, On-None-On Type, MS35058-23 or Equiv.
L2 — Any 28 Volt Lamp Not Exceeding 1 Ampere
L3 — Any 28 Volt Lamp Not Exceeding 1 Ampere

Figure 9-3. Icing System Test Box Schematic

manufacturer and the manufacturer's part number of the fuel pressure switch, then accomplish following steps (2) and (3) as applicable.

NOTE

Cook Electric P/N 575-684, Hydraulic Research P/N 96025, and Gorn Electric P/N GP2B-30001 pressure switches are differential types which are activated only when a pressure imbalance exists between the fuel pump elements. Equal pressures, whether low or high, have no effect on the caution indicator.

NOTE

Cook Electric Co. P/N 575-1337, Cook Electric Co. P/N 712-0063 and Hydra-Electric P/N 40210 pressure switches are not of a differential type and are normally closed. The caution light remains illuminated until both pumps have reached operating pressure, Low pressure from either or both fuel pump elements will close the switch and cause the caution light to illuminate.

(2) To test Cook Electric Co., Part No. 575-684; Hydraulic Research and Mfg. Co., Part No. 96025; or Gorn Electric Co., Part GP2B-3000-1, proceed as follows:

(a) Apply pressure to a single port at a time and check that ENGINE FUEL PUMP segment illuminates at 56.5 **±** 3.5 psi increasing differential pressure at either port.

(b) Relieve any applied pressure and reconnect the pressure hoses to the switch.

(3) To test Cook Electric Co. P/N 575-1337, Cook Electric Co. P/N 712-0063, or Hydra-Electric Co., Part No. 40210, the ENGINE FUEL PUMP segment shall be illuminated when both pressure ports are exposed to atmosphere pressure.

(a) Apply a steady pressure of 70 psi to the top pressure port of the switch and check that ENGINE FUEL PUMP segment remains illuminated.

(b) Maintain a pressure of 70 psi at the top pressure port of the switch and apply an increasing pressure to the bottom pressure port. Check that ENGINE FUEL PUMP segment extinguishes by the time that the pressure on the bottom port is 65 psi.

(c) Reduce pressure applied to the bottom port and check that ENGINE FUEL PUMP segment illuminates at 56.5 **±** 3.5 psi decreasing pressure.

(d) Apply a steady pressure of 70 psi to the bottom port of the switch and allow pressure applied to the top port to decrease to atmospheric pressure. Check that ENGINE FUEL PUMP segment illuminates.

(e) Maintain pressure applied to the bottom port at 70 psi and increase pressure applied to top port of the switch. Check ENGINE FUEL PUMP segment extinguishes by the time that the pressure applied to the top port is 65 psi.

(f) Reduce pressure applied to the top port. Check that ENGINE FUEL PUMP segment illuminates at 56.5 ± 3.5 psi decreasing pressure. Relieve pressure applied to both ports and reconnect the pressure hoses to the switch.

f. Twenty Minute Fuel Light.

(1) With 20 MINUTE FUEL segment illuminated (no fuel in tanks) disconnect wire E12A20 at terminal 1 of terminal board (TB38) under the left fuel cell and check that 20 MINUTE FUEL segment extinguishes.

(2) When 20 MINUTE FUEL segment is extinguished (fuel in tanks) connect wire E12A20 to ground and check that 20 MINUTE FUEL segment illuminates.

(3) Reconnect wire E12A20 to terminal 1 of terminal board (TB38).

g. Auxiliary Fuel Low Light.

(1) Close the FUEL TRANSFER PUMP circuit breaker and test auxiliary fuel low light in accordance with following steps (2), (3) or (4), as applicable.

(2) Test internal auxiliary fuel tank provisions for auxiliary fuel low light indication as follows:

(a) Connect a jumper wire from pin E of the internal auxiliary fuel tank receptacle (J148) to ground.

(b) Position right hand fuel transfer pump switch (S46) to ON and check that the AUX FUEL LOW segment illuminates.

(c) Connect another jumper wire from pin A of receptacle (J148) to ground. Check that AUX FUEL LOW segment extinguishes. Remove both jumper wires and position switch (S46) to OFF.

(d) Connect a jumper wire from pin E of the internal auxiliary fuel tank receptacle (J147) to ground. Position left hand fuel transfer pump switch (S45) to ON. Check that AUX FUEL LOW segment illuminates.

(e) Connect another jumper wire from pin A of receptacle (J147) to ground. Check that AUX FUEL LOW segment extinguishes. Remove both jumper wires and position switch (S45) to OFF.

(3) Test for auxiliary fuel low light indication with internal auxiliary fuel tank installed as follows:

(a) Position the right hand fuel pump transfer switch (S46) to ON. Check that AUX FUEL LOW segment illuminates.

(b) Return switch (S46) to OFF and position left hand fuel transfer pump switch (S45) to ON. Check that AUX FUEL LOW segment illuminates.

(4) Test external auxiliary fuel tank provisions for auxiliary fuel low light indication as follows:

(a) Connect a jumper wire between pins K and M of the right hand external fuel tank receptacle (J1024). Check that AUX FUEL LOW segment illuminates.

(b) Remove jumper wire and place it between pins K and M of the left hand external fuel tank receptacle (J1017). Check that AUX FUEL LOW segment illuminates.

h. Transmission Oil Pressure Light.

(1) Apply pressure at the transmission oil pressure switch and check that XMSN OIL PRESS segment extinguishes at 33 to 37 psi increasing pressure.

(2) Relieve pressure on transmission oil pressure switch and check that XMSN OIL PRESS segment illuminates at 28 to 32 psi decreasing pressure.

i. Transmission Oil Hot Light.

(1) Connect stud on top of the transmission oil temp switch (located on transmission) to ground and check that XMSN OIL HOT segment illuminates.

(2) Remove ground from transmission oil temp switch and check that XMSN OIL HOT segment extinguishes.

j. Hydraulic Pressure Lights.

(1) Apply external hydraulic pressure to hydraulic system and check that HYD PRESSURE segment extinguishes at 800 ± 100 psi increasing pressure.

(2) Relieve pressure applied to hydraulic system and check that HYD PRESSURE segment illuminates at 500 ± 100 psi decreasing pressure.

k Instrument Inverter Light. The instrument inverter light is checked as a part of the inverter system (paragraph 9-95).

l. DC Generator Light. The DC generator light is checked as a part of the main generator system (paragraph 9-58).

m. External Power Light.

NOTE

Disconnect external power from the helicopter before performing external power light test.

(1) Turn battery switch ON. Open external power access door and check that EXTERNAL POWER segment illuminates. External power indicator light should illuminate only when the external power access door is open.

(2) Close external power access door and check that EXTERNAL POWER segment extinguishes.

m.1. Deleted

n. Fuel Filter Bypass Light.

(1) Disconnect plug (P156) from fuel filter bypass switch. Short pin A to pin B and check that FUEL FILTER segment illuminates.

(2) Remove short between pins A and B of plug (P156) and check that FUEL FILTER segment extinguishes. Reconnect plug (P156).

o. Transmission Oil Level Light.

(1) Close both BATTERY VM circuit breakers.

(2) Actuate push button switch (S4) on cabin bulkhead at station 123 and check operation of the indicator through the sight glass in the cabin bulkhead adjacent to the switch.

p. Governor Emergency Caution Light.

(1) Verify that GOV CONT circuit breaker is closed. Position governor switch on the engine control panel to AUTO. Check that GOV EMER segment light is extinguished.

(2) Move governor switch to EMER position. Check that GOV EMER segment is illuminated. Governor emergency light should be on only when governor emergency switch is in GOV EMER position.

q. Transmission and Tail Rotor Gearbox Chip Detector Light.

(1) Check that CHIP DETECTOR segment is extinguished with the CHIP DET selector switch in the BOTH position.

(2) On helicopters without ODDS, short transmission magnetic chip detector output wire to ground. On helicopters with ODDS, short pin 1 of debris monitor cable plug to ground. Position CHIP DET selector switch to each of its three positions and check that CHIP DETECTOR segment illuminates with the switch in the BOTH and XMSN positions only. Remove short.

(3) On helicopters without ODDS, short tail rotor shaft chip detector (in 42" gearbox) output wire to ground. On helicopters with ODDS, short pin 1 of chip detector cable plug to ground. Position CHIP DET switch to each of its three positions and check that CHIP DETECTOR segment illuminates with the switch in the BOTH and TAIL ROTOR position only. Remove short.

(4) On helicopters without ODDS, short tail rotor chip detector (in 90° gearbox) output wire to ground. On helicopters with ODDS, short pin 1 of chip detector cable plug to ground. Position CHIP DET selector switch to BOTH and TAIL ROTOR and check that CHIP DETECTOR segment illuminates in both positions. Remove short.

r. Engine Chip Detector Light.

(1) Check that ENGINE CHIP DET segment is extinguished.

(2) Short engine magnetic chip detector output wire to ground. Check that ENGINE CHIP DET segment illuminates.

(3) Remove short and observe that ENGINE CHIP DET segment extinguishes.

s. Engine Air Filter Control (Helicopters Prior to 66-16868 only).

(1) Open all circuit breakers and position all switches to OFF.

(2) Close ENG AIR FILTER CONT circuit breaker. Press ENGINE INLET FILTER CLOGGED indicator (172) (press-to test type) and observe that the indicator illuminates.

(3) Using a manometer and clean air source, apply pressure to switch (figure 9-4).

CAUTION

Do not exceed applied pressure of 15 inches of water.

(4) Relieve applied pressure and observe that ENGINE INLET FILTER CLOGGED indicator (172) extinguishes.

t. Engine Inlet Air Detector Light (S/N 6616868 and Subsequent).

(1) Open all circuit breakers and position all switches to OFF.

CAUTION

Do not exceed an applied pressure of 15 inches of water.

(2) Close CAUTION LIGHTS circuit breaker. Using a manometer and clean air source, apply pressure to switch.

(3) Relieve applied pressure and observe that ENGINE INLET AIR caution segment extinguishes.

u. Fire Detection.

(1) Close FIRE DET circuit breaker.

(2) Depress fire detector test switch (S20) on the instrument panel. Check that fire detection control relay actuates and causes the FIRE WARNING light to illuminate.

v. Deleted.

w. Deleted.

X. INOP/ALQ-144 Light. The INOP/ALQ-144 Light is checked as apart of the AN/ALQ-144 System.

Y. Fuel Boost Light.

(1) Disconnect wire Q-42A20 from terminal board (TB 38) terminal No. 2 at left hand fuel cell and check that FUEL BOOST segment is on.

(2) Disconnect wire Q40A20 horn terminal board (TB35) terminal No. 2 at right hand fuel cell and check that FUEL BOOST segment extinguishes.

(3) Reconnect wire Q42A20and chock that FUEL BOOST segment is on.

(4) Reconnect wire Q40A20.

Z. ECM Antenna Light. The INOP/ECM antenna light is checked as a part of the mission antenna actuator system.

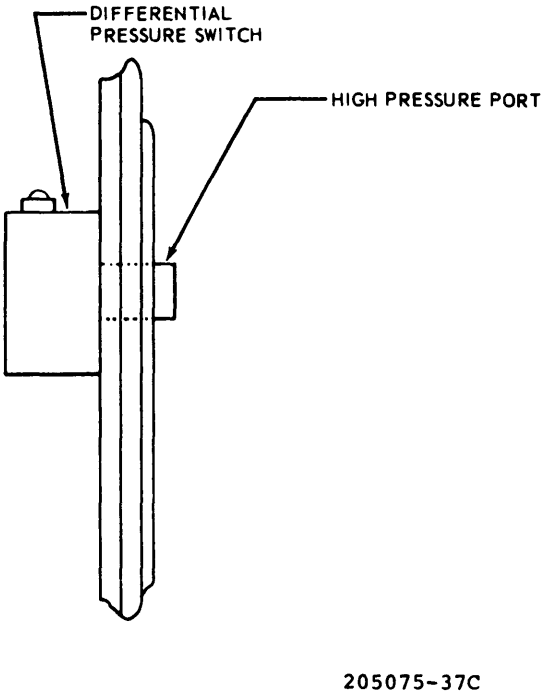

Figure 9-4. Engine Air Filter Switch

9-172. Troubleshooting – Caution Light System. Refer to schematic diagram and trace malfunctioning circuit or loop, using standard electronic troubleshooting procedures and standard test equipment. Localize malfunctioning switch components, and repair or replace as required. (See figure F-26.)

9-173. MASTER CAUTION PANEL.

9-174. Description — Master Caution Panel. The master caution panel contains a number of internally lighted segments that illuminate when associated switches, located at different places in the helicopter, actuate to complete circuits, thus indicating malfunctions in respective systems. The panel is energized by the 28 Vdc essential bus and protected by the CAUTION LTS circuit breaker.

9-176. Cleaning — Master Caution Panel. Refer to paragraph 9-7 for cleaning procedure.

9-176. Inspection — Master Caution Panel. Refer to paragraph 9-22 for impaction procedure.

9-177. Troubleshooting — Master Caution Panel. Refer to schematic diagram (figure F-26) and trace malfunctioning circuit or loop, using standard electronic troubleshooting procedures and standard test equipment. Localize malfunctioning components, and repair or replace as required.

9-178. Removal — Master Caution Panel. a. Loosen fasteners and lift caution panel from panel.

b. Disconnect electrical connector.

9-179. Disassembly, Repair or Replacement — Master Caution Panel (AVIM).

NOTE

Disassemble only to extent necessary to accomplish replacement of damaged parts, as determined by inspection or troubleshooting procedure.

a. Disassembly.

(1) Turn three fasteners (1, figure 9-5) to remove cover (5) from assembly to obtain access to interior of unit.

(2) If malfunction has been traced to a component of one of the printed circuit board assemblies (7, 8, or 9), remove the circuit board involved by removing screws (6) and unplugging board from electrical connector (29, 30, or 31).

(3) Before disconnecting any electrical leads, tag wire leads to aid in replacement of wiring at reassembly.

b. Cleaning.

(1) Remove dust or dirt from exposed surfaces, using dry compressed air pressure of 10 psig.

WARNING

Dry cleaning solvent is flammable and its fumes are toxic. Provide adequate ventilation. Do not use near a flame.

(2) Remove corrosion, dirt or other foreign matter from parts with solvent (C261), using a clean, lint-free cloth or a soft bristle brush (C62).

(3) Thoroughly dry all parts after cleaning with a clean, lint-free cloth or with compressed air at 10 psig.

c. Inspection.

(1) Inspect all components for security of connections and bent or broken pins, contacts, and terminals.

(2) Inspect wiring and connections to all parts looking for loose connections, burned or broken wires and insulation, and proper grounding.

(3) Inspect resistors for evidence of loose or broken terminals and wire leads, burned or swollen bodies, or other visual signs of damage.

(4) Inspect coils for evidence of damage. If necessary, check continuity of coils with an ohmmeter.

(5) Inspect removed printed circuit boards for broken leads, short, or damaged components. Inspect relays and diodes for broken glass envelopes.

d. Repair or Replacement.

(1) Repair of the mastor caution panel is limited to minor repairs, such as soldering loose connections and straightening bent connector pins. Damaged or malfunctioning electronic parts shall be replaced with no attempt at repair of such items.

NOTE

In each case, replace components in tho exact location from which the replaced part was removed.

(2) Refer to master caution panel schematic diagram in Appendix F when installing new electronic components or wiring.

(3) If new parts are installed, trim excess wire ends after soldering.

(4) Replace lamps in indicators of the rototellite assembly by rotating the indicator to reach the lamps in base of the unit. Lamps are held in place by spring clips.

e. Assembly.

(1) Plug circuit board assembly (7, 8, or 9, figure 9-5) into electrical connector (29, 30, 94 31) and install screws (6).

(2) Position cover (5) and attach to assembly by turning three fasteners (1).

f. Test Procedure. Perform functional test of master caution panel. Refer to paragraph 9-171 for functional test procedure.

9-180. Installation — Master Caution Panel. a . Connect electrical connector.

b. Position panel in mount, being careful not to damage wiring.

c. Engage fasteners.

9-181. RPM LIMIT WARINING SYSTEM.

9-182. Description — RPM Limit Warining System. The rpm limit warining system includes the RPM WARN SYSTEM circuit breaker located in the overhead console, rpm limit warning detector (DSI), rpm warning light (145), AUDIO RPM switch (S93) and related wiring and connectors. The rpm warning detector, operating on dc power, senses and interprets rotor and engine rpm through connection to tachometer circuits. If the rotor rpm exceeds normal limit, warning light will illuminate. When either rotor or engine rpm reaches low limit, a warning light is illuminated. If BHC Model, Saturn Model, or SDI Model rpm limit warning detectors are installed, and either rotor or engine rpm reaches the lower limit, an audio signal is produced in pilot and copilot headsets and the red RPM limit warning light is illuminated. If BHT Model 205-074-033-103 rpm limit warning detector is installed, when both rotor and engine rpm reach the low limit, an audio signal is produced in pilot and copilot headsets, and RPM limit warning light is illuminated. For starting and ground operation, audio tone can be turned off by the AUDIO RPM switch.

NOTE

Before installation, the rpm warning system detector is adjusted. Readjustment may be required whenever a tachometer generator is replaced, due to tolerances on tachometer components. Replacement of an engine tachometer generator will not require a check of rotor high rpm setting.

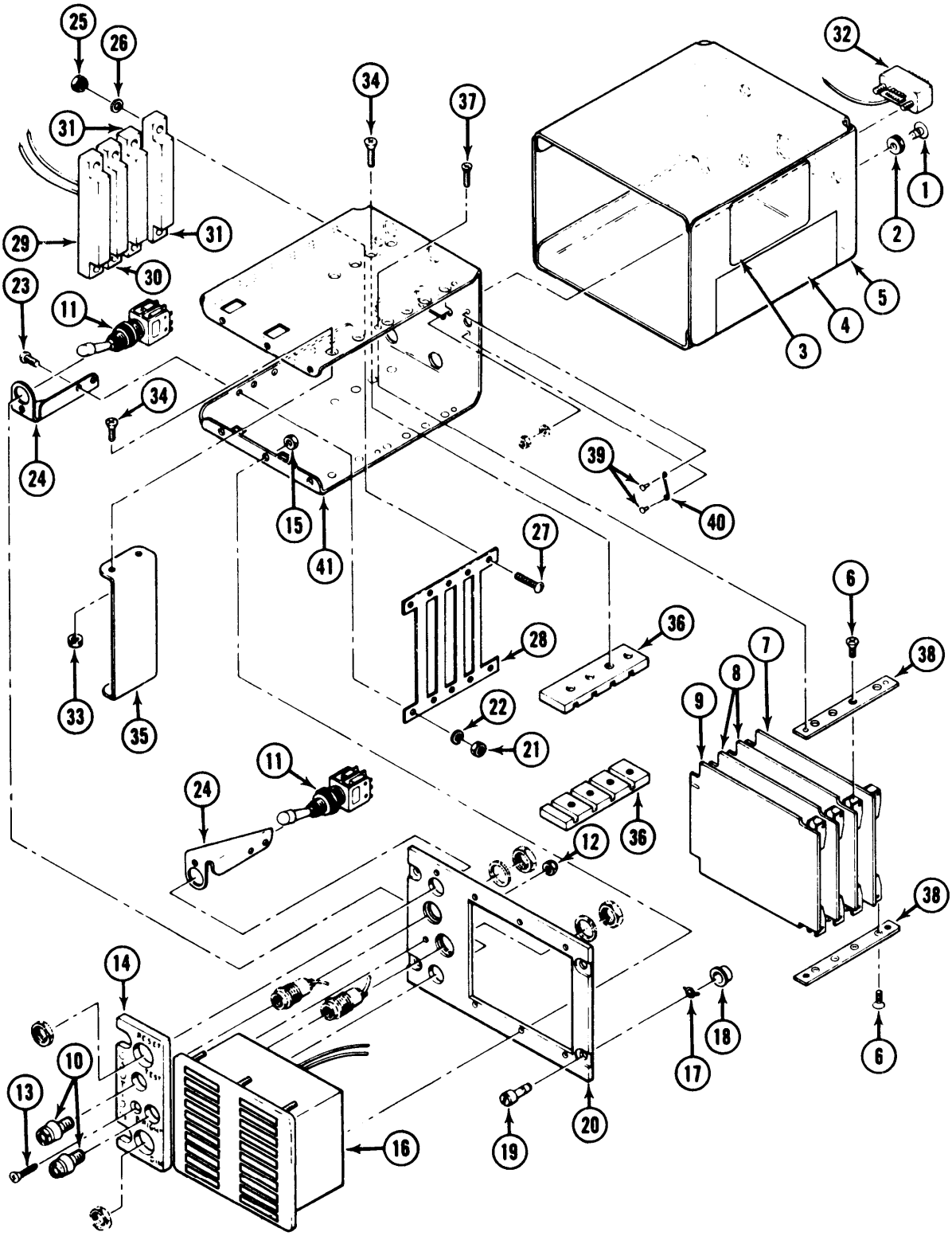

Figure 9-5. Master Caution Panel — Exploded View (Sheet 1 of 2)

1. Fastener
2. Grommet
3. Plate, identification
4. Plate, schematic
5. Cover
6. Screw
7. Printed circuit board assy
8. Printed circuit board assy
9. Printed circuit board assy
10. Light, panel
11. Switch
12. Nut
13. Screw
14. Panel
15. Nut
16. Roto-tellite
17. Spring
18. cup
19. Fastener
20. Plate
21. Nut
22. Washer, lock
23. Screw
24. Bracket
25. Nut
26. Washer, lock
27. Screw
28. Stiffener
29. Connector, electrical
30. Connector, electrical
31. Connector, electrical
32. Connector, electrical
33. Nut
34. Screw
35. Stiffener
36. Rail
37. Screw
38. Rail
39. Rivet
40. Spring
41. Bracket clamp, cable bus bar, light ground

Figure 9-5. Master Caution Panel - Exploded View (Sheet 2 of 2)

9-183. Functional Test — RPM Limit Warning System.

NOTE

Test the rpm limit warning system with engine running after replacement of rpm limit warning detector, rotor tachometer generator, or engine tachometer generator.

a. Low Rpm Limit Test.

(1) Position the audio rpm switch (S93) on the pilots engine control panel to ON.

(2) Adjust for an engine speed of approximately 6300 rpm (corresponds to 310 rotor rpm) and check that the red rpm limit warning light on the instrument panel is off and that the audio warning signal is not audible in the pilot or copilot headsets.

(3) Decrease engine speed very slowly to the point where the rpm limit warning light illuminates and a swept-frequency audio warning signal (series of audio bursts) is audible in the pilot and copilot headsets. This point should be at an engine speed of 6200 ± 100 rpm (corresponds to 305 ± 5 rotor rpm.

(4) Position the audio rpm switch (S93)to OFF. The audio signal in the headsets should cease.

(5) Adjust for an engine speed below 6000 rpm (corresponds to 295 rotor rpm), the rpm limit warning light should be illuminated, but the audio warning signal should not be audible in the pilot and copilot headsets.

(6) Increase the engine speed and verify that the rpm limit warning lights extinguishes within the limits of 6200 ± 100 engine rpm (corresponds to 305 ± 5 rotor rpm). The audio rpm switch should automatically return to ON position.

b. High Rotor Rpm Warning Test.

(1) Position the audio rpm switch (S93) to the ON position.

CAUTION

Do not exceed 15 psi torque pressure, (L-13).

NOTE

For this test/alignment only, a steady state rpm of up to 6900 output shaft speed is permissible and is not to be considered an engine overspeed as long as 15 psi torque meter pressure (L-13) is not exceeded. The collective pitch must be at full down position at all times during this check.

(2) Wkh the rotor in flat pitch and the GOV AUTO/EMER governor switch set to EMER, slowly increase throttle until the rpm warning light illuminate. The warning light should illuminate at a rotor speed of 334 ± 5 rpm (corresponds to an engine speed of 6800 ± 100 rpm) and the audio warning signal should not be audible in the pilot and copilot headsets.

9-184. Alignment — RPM Warning System. If the rpm limit warning system does not meet the requirements of the high and low rpm warning tests, align the system in accordance with the following paragraphs. Determine the model of the detector and test point location from figures 9-6, 9-7, 9-8, and 9-8A. Use table 9-9 to properly isolate each circuit for alignment of BHC Model, Saturn Model, and SDI Model rpm limit warning detectors. No special isolation procedures are necessary for BHT Model 205-074-033-103 rpm limit warning detectors.

WARNING

If alignment of RPM limit warning detector is necessary the engine should be shut down, the detector detached from the helicopter, and the 1560 -UH-1 - 772-1 extender cable or equivalent used to align the detector with the repairman strapped in one of the aircraft seats during the engine run. See figure 9-9 for cables to align rpm limit warning detector.

CAUTION

Use caution in making adjustments as excessive turning of screw or slotted adjustment can damage box.

NOTE

On BHC Model, Saturn Model, and SDI Model, to increase the rpm at which the warning light will illuminate, turn slotted adjustments clockwise. One half turn of the potentiometer shaft will cause a change of 5 rotor rpm or 100 engine rpm. Do not adjust R4 and R5. These are bench check adjustments.

Table 9-9. Isolation of Circuits for Alignment — RPM Limit Warning Detector Models

TO ALIGN	DISABLE	B.H.C. Model	SATURN Model	S.D.I. Model
R3 ENGINE LOWER LIMIT	ROTOR CIRCUIT	To CONNECT TP1 Through 10,000 Ohm RESISTOR to +28 VDC, Jumper TP1 to AUX JACK or E-N-R Switch — ENGINE See figure 9-9	CONNECT TP6 to TP8 With Jumper	ENGINE Switch — NORMAL ROTOR Switch — DISABLE
R1 ROTOR LOWER LIMIT	ENGINE CIRCUIT	CONNECT TP1 to TP2 With Jumper or E-N-R Switch — ROTOR	CONNECT TP7 to TP8 With Jumper	ENGINE Switch — DISABLE ROTOR Switch — NORMAL

a. Alignment of RPM Lower Limit.

NOTE

On modified Saturn Model RPM limit warning detector, there will be no audio tone until jumper is removed and both engine and rotor RPM are below limits set.

(1) Disengage the RPM WARN SYSTEM circuit breaker,

(2) Disconnect ship's harness from detector, detach detector from helicopter, and install 1560-UH1-772-1 extender cable or equivalent between detector and ship's harness.

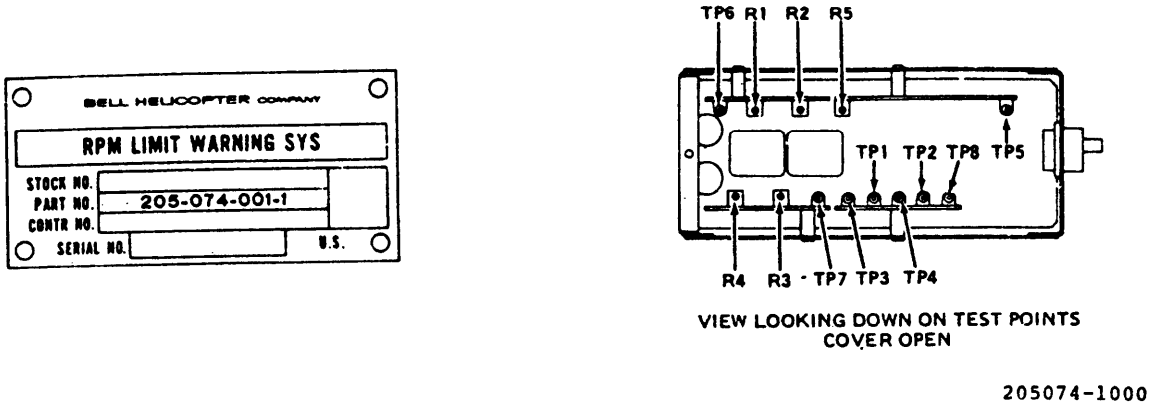

Figure 9-6. BHC Model RPM Warning Control

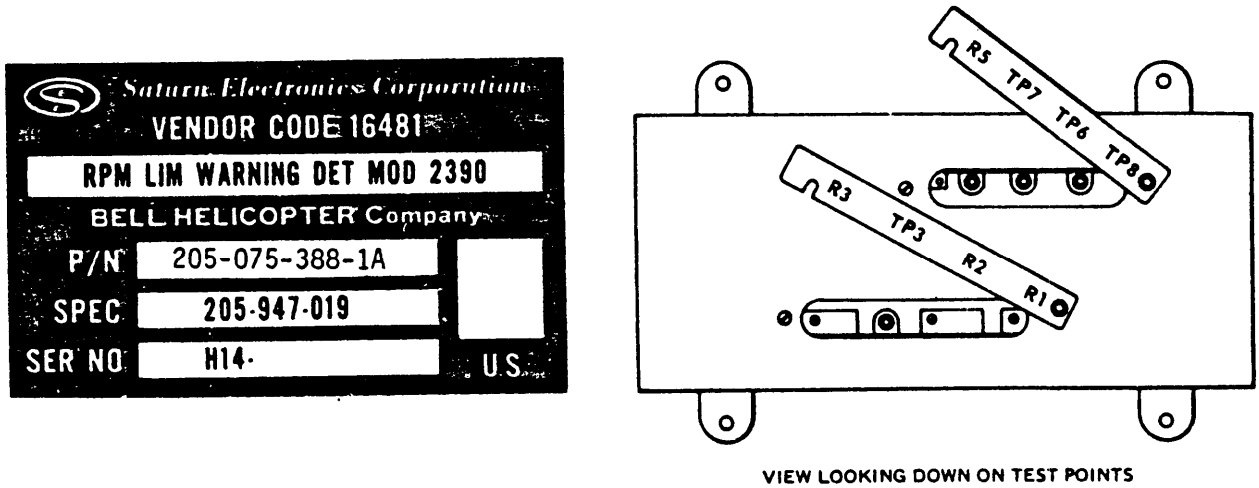

Figure 9-7. Saturn Model RPM Limit Warning Detector

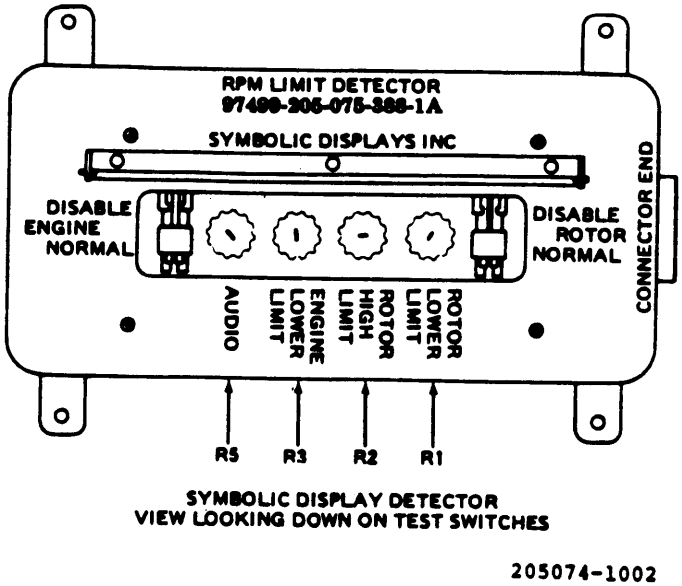

Figure 9-8. SDI Model Rpm Limit Warning Detector

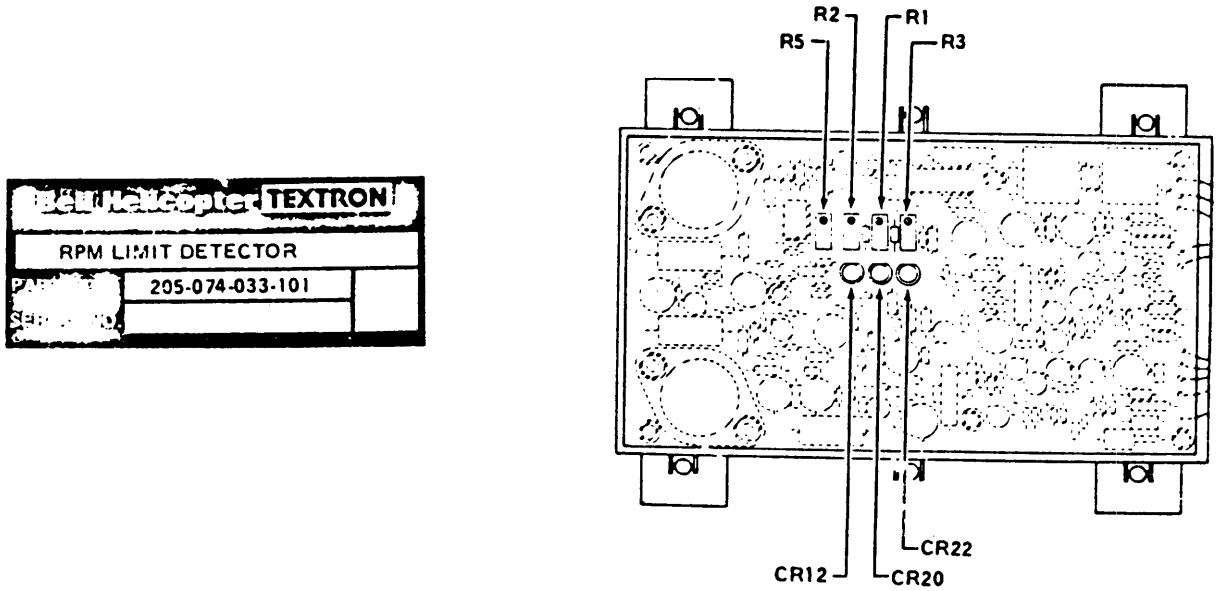

Figure 9-8A. BHT Model 205-074-033-101 Rpm Limit warning Detector

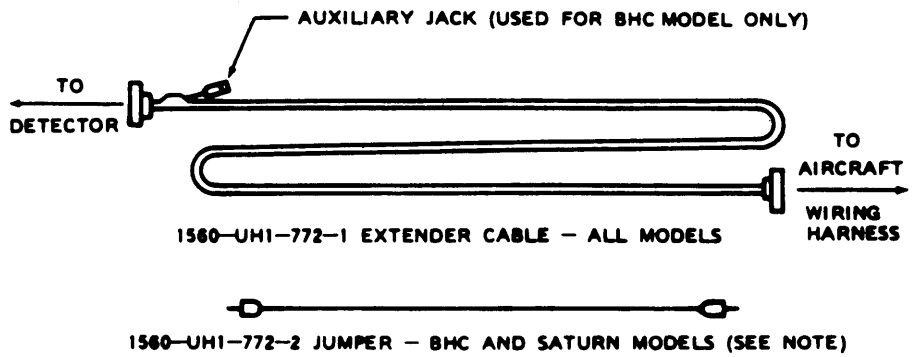

NOTE
Existing test sets using an ENGINE-NORMAL-ROTOR (E-N-R) switch may be used. Connect as shown in Detail A for BHC models or position switch to ROTOR and use test leads only as a jumper for SATURN models.

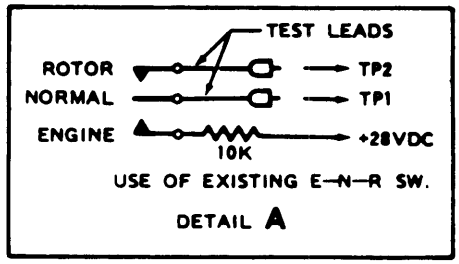

Figure 9-9. Cables for Alignment of Rpm Limit Warning Detector

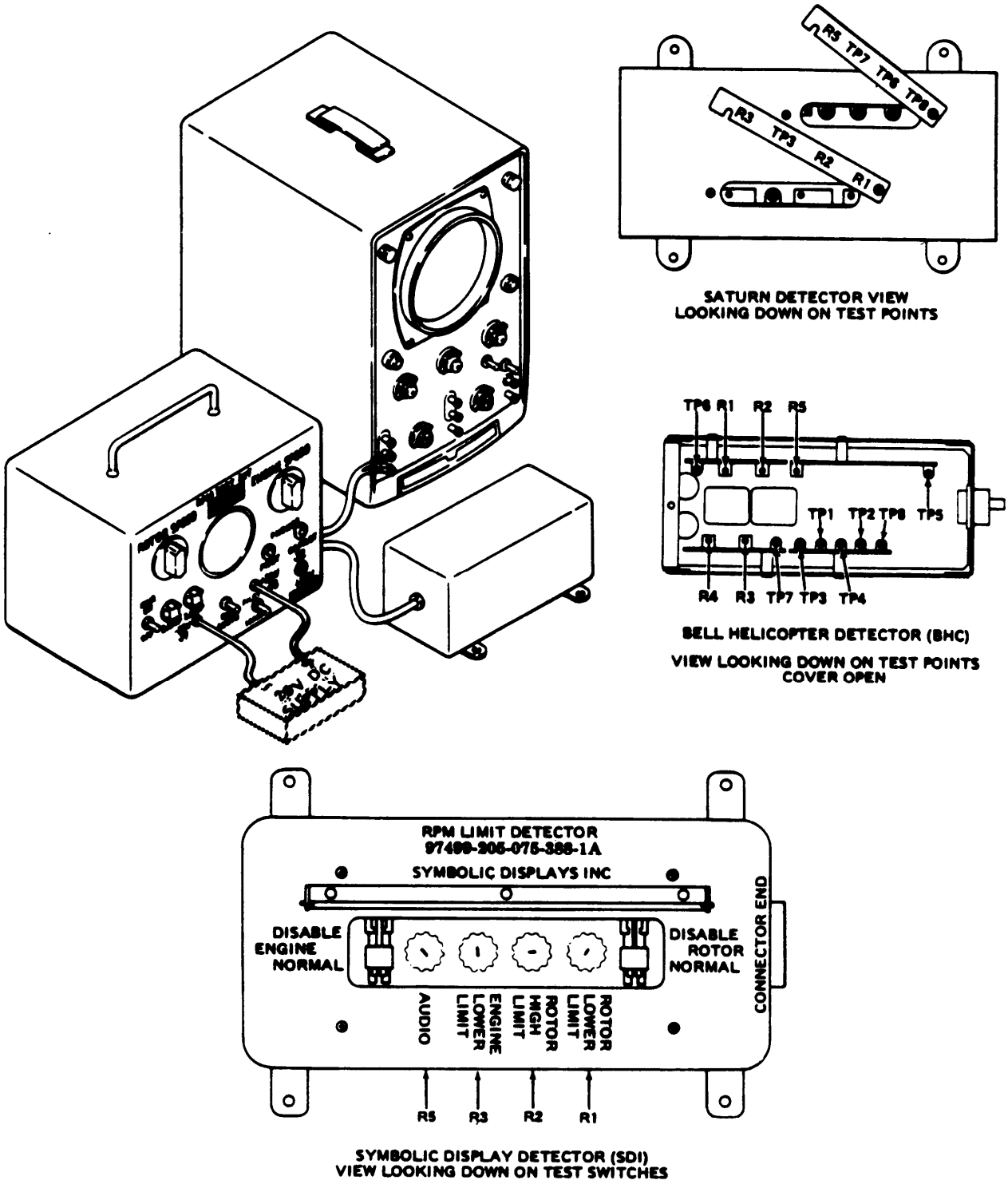

Figure 9-10. Bench Test Set Up for BHC Model, Saturn Model, and SDI Model Rpm Limit Warning. Detector

(3) Loosen screws and open cover of the detector.

(4) Engage the RPM WARN SYSTEM circuit breaker and position LOW RPM AUDIO switch to the AUDIO position. An audio warning should be present in both pilot and copilot headsets.

(5) Start the helicopter engine and increase engine speed to approximately 6300 rpm (corresponds to 310 rotor rpm). The audio signal in the headsets should cease.

(6) For BHC, Saturn, and SDI models, set switch or connect jumper to align R3 ENGINE LOWER LIMIT in accordance with table 9-9. (Not applicable for BHT Model 205-074-033-103).

(7) Decrease the engine speed to 6200 rpm (corresponds to 305 rotor rpm).

(8) If, following step (7), the RPM limit warning light is illuminated, turn R3 slowly counterclockwise until the light just extinguishes and then very slowly clockwise until the light again illuminates. If following step (7), the RPM limit warning light is extinguished, turn R3 very slowly clockwise until the light just illuminates.

(9) Vary the engine speed slowly above and below 6200 rpm (corresponds to 305 rotor rpm) while observing the RPM limit warning light. Verify that the light illuminates at an engine speed of 6200 ± 100 rpm (corresponds to 305 ± 5 rotor rpm); if not, repeat steps (7), (8), and (9).

(10) For BHC, Saturn, and SDI models, reset switches or reconnect jumper to align R1 ROTOR LOWER LIMIT in accordance with table 9-9. (Not applicable for BHT Model 205-074-033-103).

(11) Adjust for a rotor speed of 305 rpm (corresponds to 6200 engine rpm.)

(12) If, following step (1 1), the RPM limit warning light is illuminated, turn R1 slowly counterclockwise until the light just extinguishes, then very slowly clockwise until the light again illuminates. If, following step (11), the RPM limit warning light is extinguished, turn R1 very slowly clockwise until the light just illuminates.

(13) Vary the rotor speed above and below 305 rpm (corresponds to 6200 engine rpm) while observing the RPM limit warning light. Verify that light illuminates at 305 ± 5 rotor rpm (corresponds to 6200 ± 100 engine rpm). If not, repeat steps (11), (12), and (13).

(14) For BHC, Saturn, and SDI models, reset switches to NORMAL or remove jumper. Extender cable will remain connected for alignment of rpm high limit.

b. Alignment of Rpm High Limit.

(1) The high limit uses rotor rpm. only, and disabling the engine circuit is not necessary to align R2 ROTOR HIGH LIMIT,

(2) With the rotor in flat pitch and the GOV switch set to EMER, slowly increase throttle until the rotor speed is 334 ± 5 rpm (corresponds to engine speed of 6800 ± 100 rpm).

NOTE

A rotor rpm of 329-334 (engine rpm of 6700-6800) is preferable to increase the margin of overspeed warning.

(3) If, following step (2), the RPM limit warning light is illuminated, turn R2 clockwise until the light just extinguishes, then very slowly counterclockwise until the light just illuminates. If, following step (2), the RPM limit warning light is extinguished, turn R2 very slowly counterclockwise until the light-just illuminates.

(4) Vary the engine speed to verify that the RPM limit warning light illuminates and that audio warning does not occur at 334 ± 5 rotor rpm (corresponds to 6800 ± 100 engine rpm). If the RPM limit warning light does not illuminate, repeat steps (2), (3) and (4).

(5) Disengage the RPM WARN SYSTEM circuit breakers.

(6) Reset switches to normal, remove any test leads, close detector cover and secure.

(7) After engine shutdown, remove extender cable and reinstall the rpm limit warning detector.

(8) Engage the RPM WARN SYSTEM circuit breaker.

9-185. Troubleshooting Rpm Limit Warning System. Use table 9-10 and perform checks as necessary to isolate trouble. In the following table, tripped circuit breakers and burned-out indicator lamps are omitted from indications of trouble. Such trouble is usually easily detected and corrected.

Broken wiring is always a probable cause of circuit malfunction or failure and has not been included. (See figure F-27.)

N O T E

Before you use this table, be sure you have performed all normal operational checks.

Table 9-10. Troubleshooting Rpm Limit Warning System

CONDITION

TEST OR INSPECTION

CORRECTIVE ACTION

1. No audio tone is present in pilot or copilot headsets; engine not running and RPM limit warning light is illuminated.

STEP 1. Check for defective LOW RPM AUDIO switch (S93).

Replace switch if defective (paragraph 9-5).

STEP 2. Check for defective rpm limit warning detector (DS1).

Replace rpm limit warning detector if defective (paragraph 9-186).

2. Placing LOW RPM AUDIO switch (S93) to OFF does not eliminate audio tone in headsets.

STEP 1. Check for defective LOW RPM AUDIO switch (S93).

Replace switch if defective (paragraph 9-5).

3. RPM limit warning light (145) does not illuminate when engine is not running. Audio tone present in headsets.

STEP 1. Check for defective rpm limit warning detector (DS1).

Replace rpm limit warning detector if defective (paragraph 9-186).

4. RPM limit warning light (145) does not illuminate, no audio tone present in headsets when engine is not running.

STEP 1. Check for defective RPM WARN SYSTEM circuit breaker.

Replace circuit breaker if defective (paragraph 9-12).

STEP 2. Check for defective rpm limit warning detector (DS1).

Replace rpm limit warning detector if defective (paragraph 9-186).

9-186. RPM LIMIT WARNING DETECTOR.

9-187. Description — RPM Limit Warning Detector. The rpm limit warning detector (DS1), operating on dc power from the 28 Vdc essential bus, senses and interprets rotor and engine rpm through connection to tachometer circuits. If rotor exceeds normal limit, power is furnished through the detector to illuminate the rpm warning light(145). If either-BHC, Saturn, or SDI model rpm limit . warning detector is installed and either rotor or engine rpm reaches low Limit, the detector produces an audio signal in the pilot and copilot headsets and illuminates the rpm warning light. If BHT Model

205-074-033-103 rpm limit warning detector is installed, when both rotor and engine rpm reach the lower limit, an audio signal is produced in the pilot and copilot headsets and the red RPM limit warning light illuminates.

9-188. Cleaning- Rpm Limit Warning Detector. a. Remove moisture and loose dirt with a dean, soft cloth.

WARNING

Dry cleaning solvent is flammable and its fumes are toxic. Provide adequate ventilation. Do not use near aflame.

b. Remove grease, fungus, and dirt with a dean, lint-free cloth dampened with solvent (C261).

c. Remove dirt from electrical connector with a bristle brush (C62).

9-189. Inspection - Rpm Limit Warning Detector.

a. Inspect detector for cracked or distorted case.

b. Check for bent or broken connector pins.

c. Check for proper operation.

9-190. Bench Test and Adjustment - Rpm Limit Warning Detector. (AVIM)

NOTE

Step a. applies to BHC, Saturn and SDI model rpm limit warning detectors. Step b. applies to BHT Model 205-074-033-103 rpm limit warning detector.

a. BHC Model, Saturn Model, and SDI Model rpm limit warning detectors:

TEST EQUIPMENT REQUIRED

Rpm Limit Warning Detector Test Set	Locally Fabricated (see figures 9-10 and F5 and F6)
oscilloscope	AN/USM-281A
28 Vdc Power Supply, 1 ampere	

NOTE

The rpm limit warning detector test set maybe locally fabricated. See figure F5 and F6 for internal schematic.

The pilot and copilot audio outputs are loaded within the test set so that an oscilloscope may be used to monitor audio signals. The scope input cable is connected to a scope input switch that allows selection of pilot or copilot audio output.

(1) Use table 9-9 to isolate circuits in different models of rpm detectors.

(2) Use equipment shown in figure 9-9 and F-5 and test each rpm limit warning detector as follows:

(a) Loosen detector cover strip screws and move cover strips to expose test points and adjustment potentiometers.

(b) Connect detector to the bench test equipment as shown in figure 9-10. Set initial control positions on the test set as follows:

CONTROL	POSITION
PWR ON/OFF	OFF
ENGINE SPEED	FULLY COUNTER CLOCKWISE
ROTOR SPEED	FULLY COUNTER CLOCKWISE
AUDIO ON/OFF	ON
SCOPE INPUT	PILOT

(c) Energize the test equipment and allow a sufficient warmup period.

(d) Apply 27.5 Vdc power to the DC power packs on the front of the test set. Observe that the warning light on the test set is illuminated and that a sweeping audio signal is displayed on the osilloscope for both the PILOT and COPILOT positions of the scope input switch.

(e) Connect a headset to the COPILOT phone jack and determine that the aural signal is of good quality. Disconnect headset.

(f) Repeat step (e) with headset plugged into the PILOT phone jack.

(g) Disable engine circuit to align R1 ROTOR LOWER LIMIT in accordance with table 9-9.

(h) Adjust test for a similated rotor speed of 305 rpm and an engine speed of 6200 rpm. If the warning light is illuminated, adjust R1 ROTOR LOWER LIMIT counterclockwise until the light just extinguishes.

(i) Adjust R1-ROTOR LOWER LIMIT clockwise very slowly until the light just illuminates. With the light illuminated, an audio signal must be displayed on the oscilloscope for both the PILOT and COPILOT positions of the scope input switch.

(j) Position audio ON\OFF switch to OFF. The sweeping audio signal must cease.

(k) Slowly increase simulated rotor speed through 305 rpm. Observe that the audio switch automatically returns to the ON position when the warning light extinguishes.

(l) Increase simulated rotor speed to 334 rpm. It the warning light is illuminated, adjust R2-ROTOR HIGH LIMIT clockwise until the light just extinguishes.

(m) Adjust R2-ROTOR HIGH LIMIT very slowly counterclockwise until the light just illuminates. Observe that an audio signal is not displayed on the oscilloscope for either PILOT or COPILOT positions of the scope input switch.

(n) Adjust for a simulated rotor speed of 315 rpm. Observe that the warning light is extinguished and that audio signal is not displayed on the oscilloscope for either the PILOT or COPILOT positions of the scope input switch.

NOTE

For Saturn detectors, step (o) checks the engine channel tachometer failure circuits. For other models go to step (p).

(o) Momentarily adjust for a simulated engine speed of O rpm. Observe that the warning light illuminates and that audio signal is displayed on the oscilloscope for both PILOT and COPILOT positions of the scope input switch.

(p) Remove jumper or reposition switch used to disable engine circuits in step (g) and disable rotor circuit to align R3-ENGINE LOWER LIMIT in accordance with table 9-9.

(q) With the simulated rotor speed still at 315 rpm, adjust for a simulated engine speed of 6200 rpm. If the warning light is illuminated adjust R3-ENGINE LOWER LIMIT counterclockwise until the light just extinguishes,

(r) Adjust R3-ENGINE LOWER LIMIT clockwise until the light just illuminates. While the warning light is illuminated, observe that audio signal is displayed on the oscilloscope for both the PILOT l nd COPILOT positions of the scope input switch.

(s) Adjust for a simulated engine speed of 6400 rpm. Observe that the warning light is extinguished and that the audio signal is not displayed on the oscilloscope for either the PILOT or COPILOT positions of the scope input switch.

NOTE

Step (t) checks proper function only. The engine high limit potentiometer R4 is factory adjusted fully clockwise and is not to be adjusted.

(t) Repeat step (s) at a simulated engine speed of 7000 RPM.

NOTE

For Saturn detectors, step (u) checks the audio portion of the rotor channel tachometer failure circuit. For other models go to step (v).

(u) Momentarily adjust the simulated rotor speed to 0 rpm. Observe that the warning light is illuminated and that audio signal is displayed on the oscilloscope for both PILOT and COPILOT positions of the scope input switch.

(v) Remove jumper or reposition switch used to disable rotor circuit in step (p). Adjust rotor and engine speed controls on test set fully counterclockwise.

(w) Position scope input switch to PILOT and adjust R5-AUDIO for a waveform of 0.5 volt peak-to-peak. Position scope input switch to COPILOT and observe that the indicated waveform is not less than 0.25 volt peak-to-peak, and not more than 0.75 volt peak-to-peak.

(x) Disconnect detector from test set and reassemble unit.

b. BHT Model 205-074-033-103 rpm limit warning detector:

TEST EQUIPMENT REQUIRED

Rpm Limit Warning Detector Test Set	Locally Fabricated (See figures 9-1OA and F-6
Signal Generator (two required)	H-P Model 202C
28 Vdc Power Supply, 1 ampere	

NOTE

The rpm limit warning detector test set maybe locally fabricated. See figure F6 for internal schematic.

The pilot and copilot audio output circuits are loaded within the test set to simulate impedance of headset.

(1) Connect rpm limit warning detector and test equipment as shown in figure 9-10A and F6.

(2) Apply electrical power to test equipment and power supply. Allow one minute for stabilization.

(3) Set initial control positions on the test set as follows:

CONTROL	POSITION
PWR	ON
AUDIO ON/OFF	ON
AUDIO OUT	PILOT
RPM LIMIT WARN TEST	OFF

(4) Test rpm limit warning detector as follows:

(a) Adjust rotor signal generator for a frequency of 73.5 ± 1 Hz and an amplitude of 18 ± 1 peak voltage.

(b) Adjust R2 (figure 9-10A) clockwise to extinguish CR12 if it is illuminated. Slowly adjust R2 counterclockwise until CR12 illuminates. Adjust rotor signal generator frequency down until CR12 extinguishes and then up until CR12 is illuminated. The frequency of the signal generator shall be 73.54 ± 1 Hz.

(c) With RPM limit warning light (figure F-6) illuminated (high rotor limit), depress RPM LIMIT WARN TEST switch for 30 seconds minimum. Note that RPM limit warning light extinguishes while RPM LIMIT WARN TEST switch is depressed and illuminates when switch is released.

(d) With CR12 illuminated, adjust rotor signal generator frequency downward until CR12 (figure 9-1OA) is extinguished. The difference between this frequency and the high rpm limit frequency established shall not be more than 2 Hz.

(e) Adjust rotor signal generator for a frequency of 66 ±l Hz and an amplitude of 18 ±1 peak voltage.

(f) Adjust R1 of the rpm limit detector counterclockwise to extinguish CR20, if it is illuminated. Slowly adjust rotor signal generator frequency up until CR20 extinguishes and then back down until CR20 is illuminated. The frequency of the signal generator shall be 66 ± 1 Hz.

(g) With CR20 illuminated, adjust rotor signal generator frequency up until CR20 is extinguished. The difference between this frequency and the low rpm limit frequency established shall not be more than 2 Hz.

(h) Adjust engine signal generator for a frequency of 66 ± 1 Hz and an amplitude of 18 ±1 peak voltage.

(i) Adjust R3 of the rpm limit detector counterclockwise to extinguish CR22, if it is illuminated. Slowly adjust R3 clockwise until CR22 illuminates. Adjust engine signal generator frequency up until CR22 extinguishes and then back down until CR22 is illuminated. The frequency of the signal generator shall be 66 ± 2 Hz.

(j) With CR22 illuminated, adjust engine signal generator frequency up until CR22 is extinguished. The difference between this frequency and the low engine limit frequency established shall not be greater than 2 Hz.

(k) Adjust both rotor and engine Signal generators down in frequency to approximately 50 Hz. Note that RPM limit warning light (figure F-6) is illuminated. Place AUDIO OUT switch in PILOT position. Check that the audio level at J7 (on rpm warning test set) is adjustable, by adjustment of R5, from 0 to 300 millivolts rms. Repeat check with AUDIO OUT

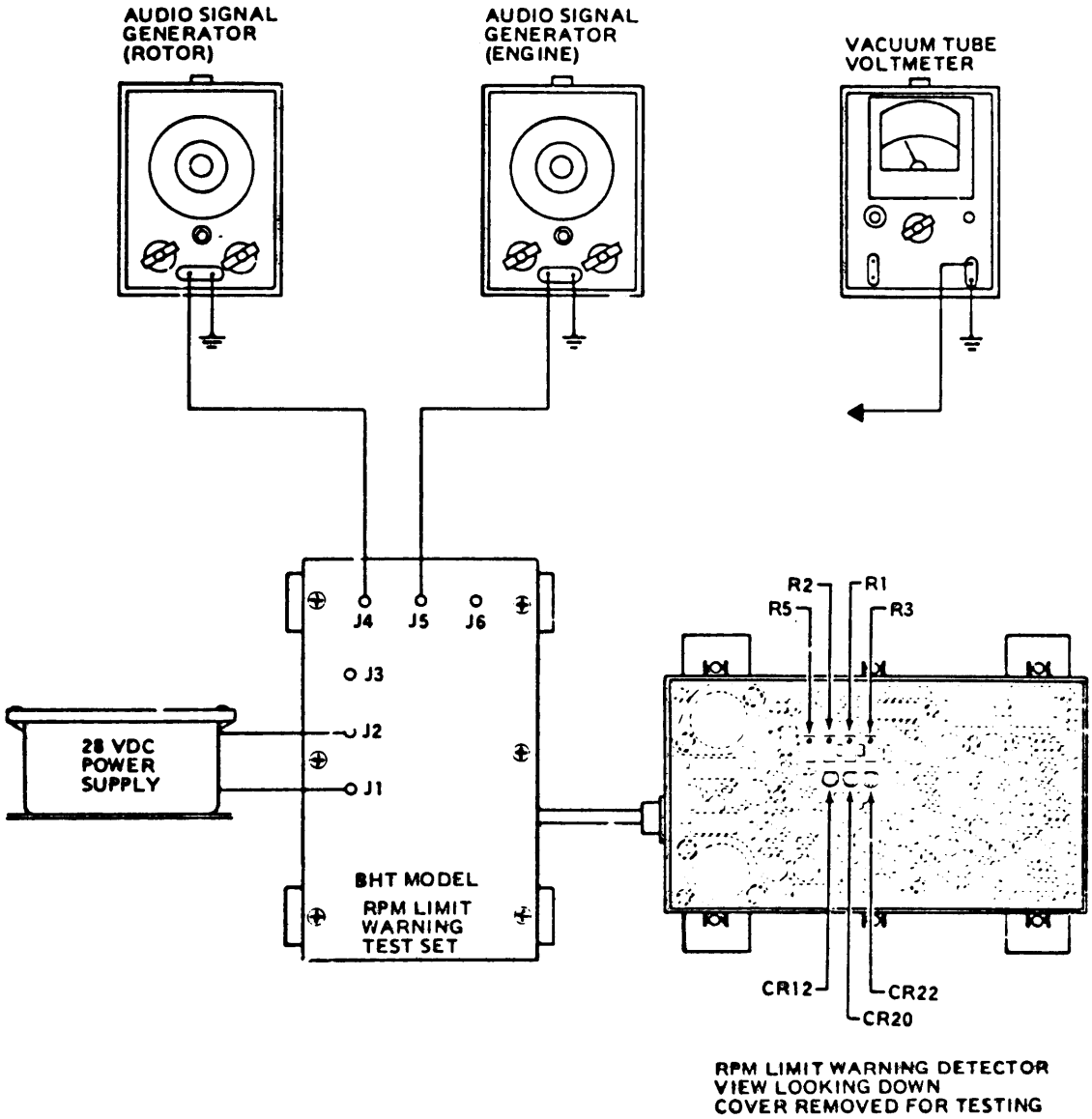

Figure 9-10A. Bench Test Set Up for BHT 205-074-033-101 Rpm Limit Warning Detector

switch in COPILOT position. Set R5 (figure 9-10A) for an audio level of 300 millivolts rms of J4 with AUDIO OUT switch In PILOT position.

(1) Adjust rotor and engine signal generators for normal operation (frequencies of approximately 70 Hz and amplitude to 18 ± 1 peak voltage). RPM limit warning light (figure F-6) should be extinguished and audio should not be heard in either PILOT or COPILOT positions of AUDIO OUT switch.

(m) Adjust engine signal generator down in frequency to approximately 50 Hz. Check that RPM limit warning light is illuminated, but audio is not heard in either position of AUDIO OUT switch.

(n) Return to normal operation (refer to step 1).

(o) Adjust rotor signal generator down in frequency to approximately 50 Hz. Check that RPM limit warning light is illuminated, but audio is not heard in either position of the AUDIO OUT switch.

(p) Return to normal operation (refer to step 1).

(q) Adjust both rotor and engine signal generators for frequency of approximately 50 Hz and amplitude of 18 peak voltage. Note that RPM limit warning light is illuminated and audio is heard in either position of the AUDIO OUT switch.

(r) Place AUDIO ON-OFF switch to OFF position. Note that audio is not heard in either position of AUDIO OUT switch.

(s) Return AUDIO ON-OFF switch of ON position. Check that audio is heard at J7 in either position of AUDIO OUT switch.

9-191. Removal — Rpm Limit Warning Detector. a. Remove attaching hardware and disconnect electrical connector.

b. Remove detector.

9-192. Repair or Replacement — Rpm Limit Warning Detector. a. Tighten or repair any loose or defective mounting hardware or electrical connector.

b. Replace detector if any other inspection requirements are not met.

9-193. Installation — Rpm Limit Warning Detector. a. Position detector into place and install mounting hardware.

b. Connect electrical connector.

9-193.1 OIL DEBRIS DETECTION SYSTEM (ODDS)

9-193.2. Description. The oil debris detection system (ODDS) provides for prediction/detection of impending failures of oil-wetted components: engine, transmission, and 42- and 90-degree tall rotor gearboxes. The system also improves oil filtration, reduces wear on seals, reduces unscheduled removal of oil-wetted components, and reduces nuisance chip indications caused by normal-wear particles on detector gaps. Twenty-eight volt dc for system operation is obtained horn the essential bus through 5-ampere ODDS circuit breaker.

NOTE

All hardware associated with ODDS system which is utilized on a replaceable assembly (i.e. 42, 90 degree gear boxes, transmission, etc.) must be removed prior to assembly being evacuated to depot. ODDS items shall be reinstalled on the new assembly.

a. Powerplant oil system components:

(1) Oil separator (Lubriclone) in engine service compartment (paragraph 4-100.2).

(2) Oil filter, which has a 3-micron element, in engine service compartment (paragraph 4-100.13).

(3) Chip detector at bottom of oil separator. Detector is wired to ENGINE CHIP DET caution capsule.

b. Drive system components:

(1) Debris monitor in transmission sump. Monitor replaces pre-ODDS conventional filter.

(2) External filter, which has 3-micron element, in cargo sling compartment. Filter replaces pre-ODDS 25-micron filter.

(3) Three chip detectors, one in debris monitor and one each in 42 and 90-degree gearboxes. Detectors are wired to CHIP DET caution capsule.

c. Electrical system component: Power module, overhead in front of cabin, provides electrical power to pulse (burn) away ferrous (iron or steel) debris less than 0.005 inch in cross section. Larger debris will not puke away, but bridges chip gap and closes the circuit to caution capsule.

9-193.3 Functional Test — ODDS

a. Apply external power to helicopter.

b. Check that ODDS and CAUTION LIGHTS circuit breakers are closed.

c. Set CHIP DET switch on pedestal to BOTH.

d. At each chip detector or debris monitor listed below (four locations), perform functional test as follows:

(1) Disconnect cable plug.

(2) Remove chip detector.

(3) Connect chip detector to cable plug.

(4) Ground body of detector to clean unpainted surface of airframe. Use a jumper wire.

(5) Place paper clip or similar iron or steel object across chip gap of detector. The paper clip will draw a spark; caution capsule listed and MASTER CAUTION light shall come on.

Chip Detector	Location	Caution Capsule
1 D851 * (two chip gaps)	Transmission	CHIP DET
1B833	42˚ Gearbox	CHIP DET
1B833	90˚ Gearbox	CHIP DET
84443B	Engine	ENGINE CHIP DET

* Test each chip gap separately.

(6) Set CHIP DET switch to position which matches chip detector being tested, XMSN or TAIL ROTOR. Caution capsule shall remain on.

(7) Set switch to opposite position. Capsule shall go out.

(8) Set switch to position which matches capsule. Caution capsule shall come on.

(9) Remove paper clip. Caution capsule shall go out. MASTER CAUTION light will go out when pressed. Separate chip detector from ground.

(10) Disconnect cable plug from chip detector.

(11) Install and connect chip detector probe. Safety wire each chip detector connector with lockwire (C155).

9-193.4 ODDS POWER MODULE

9-193.5 Description — A power module (8, figure 9-2) for oil debris detection system (ODDS) is overhead on the web just aft of the cockpit at butt line 23R. Power module responds to iron or steel chips across four chip detectors by pulsing them. If chips are less than about 0.005 inch in cross section, the module will pulse (burn) them away before caution capsule can respond. If chips are larger, they will not burn away; they will bridge the chip gap and light a caution capsule. The power module is connected to chip detectors in oil system or oil supply of engine, transmission, and two tailrotor gearboxes. Components of power module are encapsulated in a 3 x 3 x 1-1/2-inch black box. Twenty-eight-volt dc for operation is obtained from essential bus through ODDS circuit breaker. Connections to circuits are made through a 12 pin electrical receptacle.

9-193.6 Removal — Power Module

a. Disconnect cable plug.

b. Remove four screws, eight washers, and four nuts and remove power module.

NOTE

When the ODDS Power Module is not installed, use Chip Light procedures established for non-ODDS equipped aircraft. If there is any uncertainty about the type of debris found, the normal procedures prescribed in the TM and TB 1-1520-243-20-26 should be followed.

9-193.7 Installation — Power Module

a. Position the power module overhead on the web (station 75, butt line 23R).

b. Install four screws, washers, and nuts.

c. Connect the cable plug to the power module.

d. Test the system (paragraph 9-193.3).

b. Connect electrical connector.

9-194. EXTERIOR LIGHTS SYSTEM.

9-195. Description — Exterior Lights System. The exterior lights system includes the landing and searchlights, anticollision light, navigation lights, navigation lights flasher, and transmission oil level light.

9-196. LANDING AND SEARCHLIGHT SYSTEM.

9-197. Description – Landing and Searchlight System. One landing light and one searchlight are located on the underside of the cabin. Each has individual control and power circuits which are powered from essential bus and protected by circuit breakers. Control switches for both lights are located on the pilots collective stick, They consist of four switches, two that control power to the lamps, and two that control the positions of the lights.

NOTE

Aircraft modified for night vision goggles capability the copilot collective stick contains additional landing light control switches wired in parallel with pilot landing light switches.

9-198. Functional Test — Landing and Searchlight System. a. Perform functional test of landing light as follows:

CAUTION

Do not operate landing light in areas of combustible material, such as tall grass. etc.

(1) Close LDG LT PWR and LDG & SEARCHLIGHT CONT circuit breakers. Position lamp control switch (S76) on the pilots collective stick to ON and check that landing light illuminates. Return switch (S76) to OFF.

(2) Position extend-retract switch (S25) to EXTEND (fwd position). Check that light extends and is stopped by the extend limit switch at approximately 120 degrees extension.

(3) Position switch (S25) to RETRACT (aft position). Check that light retracts and is stopped in the stowed position by the retract limit switch.

NOTE

Aircraft modified for night vision goggles capability, functionally test light and make sure that light does not extend beyond approximately 90 degrees arc on retract to full up position.

b. Perform functional test of searchlight as follows:

CAUTION

Do not operate searchlight in areas of combustible material, such as tall grass. etc.

(1) Close SEARCHLIGHT PWR and LOG & SEARCHLIGHT CONT circuit breakers. Position lamp control switch (S75) to ON and check that searchlight illuminates. Return switch to OFF.

(2) Position four-way switch (S12) to EXT (fwd position). Check that light extends and is stopped by extend limiter switch at approximatley 120 degrees extension.

(3) Position switch (S12) to RETR (aft position). Check that light retracts.

(4) With light partially extended, position switch (S12) to “L” and check that light rotates to the left.

(5) Position switch (S12) to “R” and check that light rotates to the right.

(6) With light extended and rotated, position switch (S75) to S L STOW. Check that light retracts and is stopped by the retract limit switch and then rotates to its level stowed position and stops.

9-199. Troubleshooting — Landing and Searchlight System. Use table 9-11 and perform checks as necessary to isolate trouble. Tripped circuit breakers are omitted from indication of trouble since such trouble is usually easily detected and corrected. Broken wiring is always a probable cause of circuit malfunction or failure and has not been included. (See figure F-28.)

NOTE

Before you use this table, be sure you have performed all normal operational checks.

Table 9-11. Troubleshooting Landing and Searchlight System

CONDITION

TEST OR INSPECTION

CORRECTIVE ACTION

1. Landing light (I16) inoperative.

STEP 1. Ensure that voltage is present on 28 Vdc bus. Check for defective LDG LT PWR and/or LOG & SEARCHLIGHT CONT circuit breakers.

Replace circuit breaker(s) if defective (paragraph 9-12).

STEP 2. Check for defective landing light switch (S76).

Replace switch if defective (paragraphs 9-5 through 9-11).

2. Landing light dim, constantly or intermittently.

STEP 1. Place temporary jumper from bare metal on lamp to metal frame and then turn on. If lamp burns brightly constantly, check mounting of lamp for corrosion and/or paint.

Clean as necessary to provide a good electrical ground (paragraph 9-7).

STEP 2. Check for loose power lead or corroded terminal.

Tighten or clean connection in power circuit (paragraphs 9-7, 9-10).

STEP 3. Check for burned relay contacts.

Replace relay if defective (paragraphs 9-5 through 9-11).

3. Searchlight (I11) inoperative.

STEP 1. Ensure that voltage is present on 28 Vdc bus and check for defective SEARCHLIGHT PWR and/or LOG & SEARCHLIGHT CONT circuit breakers.

Replace circuit breaker(s) if defective (paragraph 9-12).

STEP 2. Check for defective searchlight switch (S75).

Replace switch if defective (paragraph 9-5).

4. Searchlight dim, constantly or intermittently.

STEP 1. Place temporary jumper from bare metal on lamp to metal frame and then turn on. If lamp burns brightly constantly, check mounting of lamp for corrosion and/or paint.

Clean as necessary to provide a good electrical ground (paragraph 9-7).

STEP 2. Check for loose power lead or corroded terminal.

Tighten or clean connection in power circuit (paragraphs 9-7, 9-10).

Table 9-11. Troubleshooting Landing and Searchlight System (Cont)

CONDITION	TEST OR INSPECTION	CORRECTIVE ACTION
STEP 3. Check for burned relay contacts.		**Replace relay if defective (paragraph 9-5).**

9-200. LANDING AND SEARCHLIGHTS.

WARNING

Never look at searchlight when light is on and filter is not installed. Always look from side with filter installed.

9-201. Description-Landing and Searchlights. The landing light is controllable with extend and retract motion. The searchlight is controllable with extend, retract, rotate left, and rotate right motion.

9-202. Cleaning—Landing and Searchlights. a. Remove moisture and loose dirt with a clean, soft cloth.

WARNING

Dry cleaning solvent is flammable and its fumes are toxic. Provide adequate ventilation. Do not use near a flame.

b. Remove grease, fungus, and dirt with a clean, lint-free cloth dampened with solvent (C261).

c. Remove dirt from electrical connectors with a bristle brush (C62).

9-203. Inspection-Landing and Searchlights. a. Check light for defective or broken sealed beam unit.

b. Check for loose connections and damaged or defective component parts (terminal strips, limit switches, drive motors, relays, etc.).

9-204. Removal-Landing and Searchlights. a. Ensure all electrical power is OFF.

b. Remove attaching screws from light assembly mounting plate; lower light and plate.

c. Remove light mounting screws.

d. Remove terminal cover, disconnect, tag, and protect wires with electrical tape (C275).

e. Remove light assembly.

9-205. Repair or Replacement—Landing and Searchlights. a. Accomplish replacement of sealed beam lamp as follows: Remove three screws from lamp retainer ring, remove ring and gasket, lift lamp and disconnect wiring.

NOTE

Observe position of lamp before removal and install new unit in same position using reverse order of removal procedure.

b. Replace complete unit if inspection items in paragraph 9-203, step b. are not met.

9-206. Installation—Landing and Searchlights. a. Connect wires and install terminal cover and clamp.

b. Position light on mounting plate; secure with mounting screws.

c. Position plate and light assembly on fuselage and secure with mounting screws.

d. Check light for proper operation.

9-207. ANTICOLLISION LIGHT SYSTEM.

9-208. Description—Anticollision Light System. Anticollision light system consists of a circuit breaker, a switch, and the anticollision light assembly.

Anticollision light is installed on tailpipe fairing. Circuit breaker and switch are on overhead console.

9-209. Functional Test - Anticollision Light System. a. Close ANTI-COLL LT circuit breaker.

b. Position ANTI-COLL LT switch (S59) to ON and check that lamp(s) illuminate and that the light flashes 70 ± 30 flashes per minute, single bulb 90 ± 9 flashes per minute, dual bulb.

9-210. Troubleshooting — Anticollision Light System. Use table 9-12 and perform checks as necessary to isolate trouble. Tripped circuit breakers are omitted from indication of trouble since such trouble is usually easily detected and corrected. Broken wiring is always a probable cause of circuit malfunction or failure and has not been included. (See figure F-29.)

NOTE

Before you use this table, be sure you have performed all normal operational checks.

Table 9-12. Troubleshooting Anticollision Light System

CONDITION TEST OR INSPECTION	**CORRECTIVE ACTION**
1. Anticollision light (I40) fails to operate with anticollision light switch (S59) in ON position.	
STEP 1. Ensure that voltage is present on 28 Vdc bus and check for defective ANTI-COLL LT circuit breaker.	**Replace circuit breaker if defective (paragraph 9-12).**
STEP 2. Check for defective anticollision light switch (S59).	**Replace switch if defective (paragraph 9-5).**
2. Anticollision light fails to rotate with anticollision light switch (S59) in ON position.	
Check for proper operating voltage at pin B of connector (P111).	**Replace anticollision light if defective (paragraph 9-211).**

9-211. ANTICOLLISION LIGHT.

9-212. Description — Anticollision Light. The anticollision light may have one or two bulbs. The internal assembly is motor driven and rotates to produce a flash effect.

9-213. Cleaning — Anticollision Light. a. Remove moisture and loose dirt with a clean, soft cloth.

WARNING

Dry cleaning solvent is flammable and its fumes are toxic. Provide adequate ventilation. Do not use near a flame.

b. Remove grease, fungus, and dirt with a clean, lint-free cloth dampened with solvent (C261).

c. Remove dirt from electrical connectors with bristle brush (C62).

9-214. Inspection — Anticollision Light. a. Inspect light for broken cover, lens or open lamp filament.

b. Inspect light for damaged case or broken connector pins.

c. Inspect motor for damage and proper operation.

9-215. Removal - Anticollision Light. a. Ensure that all electrical power IS OFF.

b. Remove mounting screws around base of light, lift light up, and disconnect electrical connector.

9-216. Repair or Replacement — Anticollision Light. a. Loosen screw securing lens cover retaining ring, lift lens from light base. Install and secure lamp, lens or cover in reverse order of removal procedure.

b. Replace complete unit if inspection requirements are not met.

c. If drive gear is loose on motor shaft, secure with sealing compound (C 187.5)

d. Deleted.

9-217. Installation — Anticollision Light. a. Connect electrical connector to light and secure with lockwire.

b. Place light in recess and install mounting screws.

c. Check light for proper operation.

9-218. NAVIGATION LIGHTS SYSTEM.

9-219. Description — Navigation Lights System. The navigation lights system consists of circuit breaker, two selector switches, flasher, two red lights on the left side and two green lights on the right side (one each above and below the cabin door), three fuselage white lights (one above each cabin door and (one each above and below the cabin door), and one amber/clear light in the vertical fin of the aft section assembly The navigation lights system also Includes three fuselage white lights [one above each cabin door and one on bottom right side of cabin) On UH - 1 D/H serial number 65-9565 and subsequent, the white Ilghts are protected by a separate circuit

9-220. Functional Test – Navigation Lights System. a. Close FUS LIGHTS circuit breaker. Place navigation lights switch (S13) to STEADY. Position dim-bright switch (S14) to BRT. Check that the two upper and one lower fuselage lights are on bright

b. Position switch (S14) to DIM and check that the fuselage lights specified in step a. are on dim.

c. Close NAV LIGHTS circuit breaker. Check that the two red (left side) and the two green (right side) navigation lights and the tail light are illuminated and are on dim.

d. Position switch (S14) to BRT. Check that all lights specified in steps a. and c. are on bright.

e. Position switch (S13) to FLASH. Check that the two red and two green navigation lights and the tail light flash at a rate of approximately 85 ± 15 times a minute

9-221. Troubleshooting — Navigation Lights System. Use table 9-13 and perform checks as necessary to isolate trouble. Tripped circuit breakers are omitted from indication of trouble since such trouble is usually easily detected and corrected. Broken wiring is always a probable cause of circuit malfunction or failure and has not been included (See figure F-29)

NOTE

Before you use this table, be sure you have performed all normal operational checks.

Table 9-13. Troubleshooting Navigation Lights System

CONDITION

TEST OR INSPECTION

CORRECTIVE ACTION

1. Fuselage lights (white) fail to burn bright with switch (S13) to STEADY and switch (S14) to BRT.

Check for defective switch (S14).

Replace switch if defective (paragraph 9-5).

2. Fuselage lights (white) fail to dim with switch (S14) to DIM.

Check for defective switch (S14).

Replace switch if defective (paragraph 9-5).

3. One fuselage or navigation light dim or intermittent.

Check for poor electrical ground at light.

Remove light and clean ground (paragraph 9-5).

4. Navigation lights (red, green, and amber/clear) fail to burn bright with switch (S13) to STEADY and switch (S14) to BRT.

Check for defective switch (S14).

Replace switch if defective (paragraph 9-5).

5. Navigation lights (red, green, and amber/clear) fail to dim with switch (S14) to DIM.

STEP 1. Check for defective switch (S14).

Replace switch if defective (paragraph 9-5).

STEP 2. Check for defective dimming resistor (R7).

Replace resistor if defective (paragraph 9-5).

6. Navigation lights (red, green, and amber/clear) fail to flash when switch (S13) is placed to FLASH.

STEP 1. Check for defective switch (S13).

Replace switch if defective (paragraph 9-5).

STEP 2. Check for defective flasher (Z3).

Replace flasher if defective (paragraph 9-229).

9-222. NAVIGATION LIGHTS.

9-223. Description - Navigation Lights. The navigation lights consist of the upper and lower fuselage lights, upper and lower navigation lights and the tail light. The fuselage light units have two bulbs which furnish dim or bright white light. The navigation lights installed on the right side of the helicopter furnish green light, the lights installed on the left side of the helicopter furnish red light, and the tail light furnishes amber or clear light.

9-224. Clearing - Navigation Lights.

a. Remove moisture and loose dirt with a clean, soft cloth.

WARNING

Dry cleaning solvent is flammable and its fumes are toxic. Provide adequate ventilation. Do not use near a flame.

b. Remove grease, fungus and dirt with a clean, lint-free cloth dampened with solvent (C261).

c. Remove dirt from electrical connectors with a bristle brush (C62).

9-225. Inspection - Navigation Lights. Inspect lights for corroded lamp socket terminals, shorted or broken wires, cracked lens, burned out lamp bulbs or improper bonding of light case to airframe. Inspect lens for proper painting IAW paragraph 9-228 c.

9-226. Removal - Navigation Lights.

a. Check that all electrical power is OFF.

b. Remove cover retaining screw. Remove screws attaching light assembly to bracket, pull assembly from helicopter, and disconnect electrical connector. Lift light assembly from helicopter. Cover boss wire with taps (C270).

9-227. Repair or Replacement - Navigation Lights. Replace faulty or damaged component parts (lens, lamp bulbs, etc.). If light case is damaged beyond repair, complete unit must be replaced. Reinstall both upper and lower lenses. Ensure lenses are properly painted IAW paragraph 9-228 c.

9-228. Installation - Navigation Lights.

a. Remove any tape and tape residue, cleaning thoroughly before reinstalling navigation lights.

b. Remove tape from wire and connect wire to light. Secure light to adapter bracket with screws. Install cover with screw.

c. Lens Modification (Refer to Figure 9-10.1)

(1) Both upper and lower red and green lenses need to be modified. Leave position dome lens in assembly.

(2) Determine the horizontal center line of the position lights by drawing or making from the center of the phillips and cone point of the light cover and extend across dome lens through the raised letter or dimple located in the center of the lens (refer to Figure 9-10.1).

(3) For the upper right and left position lights, mark a line 1/8 inch below and parallel to the center line drawn in step 2. The line should extend from the light cover to the base of the lens. Note that the masking tape will just cover the head of the phillips screw on the light assembly covers.

(4) For the lower right and left position lights, measure and mark 1/8 inch above and parallel to the center line mark on the lens. Again, the line should extend from the light cover to the base of the lens. Place masking tape on the lower part of the light assembly along the 1/8 inch line above the center line. Again, note that the masking tape just covers the head of the phillips screw on the light assembly covers.

(5) Verify that slightly more then 1/2 of the top portions of the exposed upper position lights are completely masked, and slightly more than 1/2 of the bottom parts of the lower position lights are completely mashed.

(6) To prevent overspray of the airframe CARC paint, cut a piece of Stencil Board, Oil, NSN 9310-00-160-7858, approximately 16 inches long by 11 inches wide and locate center point. Place the position light template over the center point of the cut stencil hoard (lengthwise) and draw around the template. Remove the template and (with a sharp instrument) art out template area. The position light assembly will he exposed to minimal overspray.

NOTE

Roughing the exposed lens surfaces with either steel wood or sandpaper prior to painting may make application easier and improve paint adhesion.

(7) Paint the exposed area of the lenses using Lacquer, Olive Drab, 16 oz. aerosol can, NSN 8010-00-584-3149. Proceed until sufficient coats are applied to prevent any bleeding of light through the painted area. Test the opacity of the painted area by turning on the position lights.

d. Check operation of light

9-229. NAVIGATION LIGHTS FLASHER.

9-230. Description - Navigation Lights Flasher. The navigation lights flasher is mounted in the aft electrical compartment on UH-1H/V helicopters through serial number 64-13901. The flasher number will cause the white and colored navigation lights to flash alternately. On UH-1H/V serial number 65-9596 and subsequent, the flasher will cause only the colored navigation lights to flash.

9-231. Cleaning - Navigation Lights Flasher.

a. Remove moisture and loose dirt with a clean, soft cloth.

WARNING

Dry cleaning solvent is flammable and its fumes are toxic. Provide adequate ventilation. Do not use near a flame.

b. Remove grease, fungus and dirt with a clean, lint-free cloth dampened with solvent (C261).

c. Remove dirt from electrical connectors with a bristle brush (C62).

9-232. Inspection - Navigation Lights Flasher. Inspect flasher for dents or damage that would impair not normal operation of the unit. Check connector for broken or corroded pins and cracked inserts.

9-233. Remove - Navigation Lights Flasher.

a. Ensure all electrical power is Off.

b. Disconnect the electrical connector. Remove mounting hardware and lift from compartment.

9-234. Repair or Replacement - Navigation Lights Flasher. Replace item if inspection requirements are not met

9-235. Installation - Navigation Lights Flasher.

a. Position flasher in compartment and install mounting hardware.

b. Connect electrical connector. Check for proper operation.

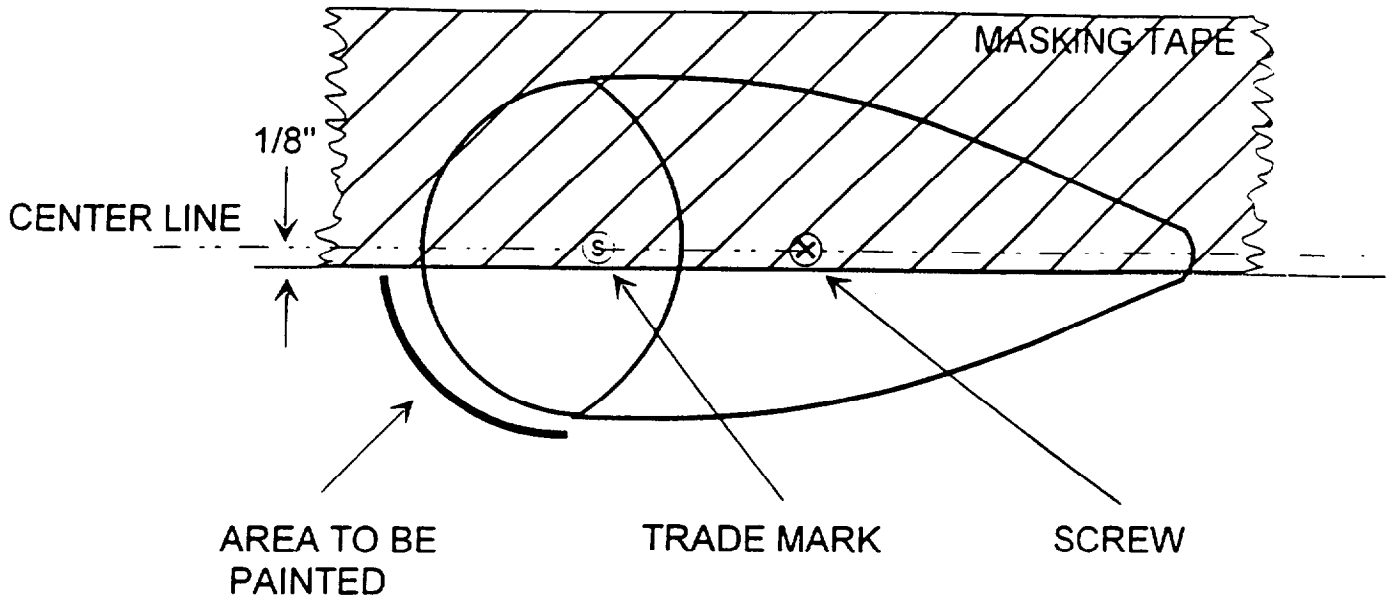

TOP POSITION LIGHT

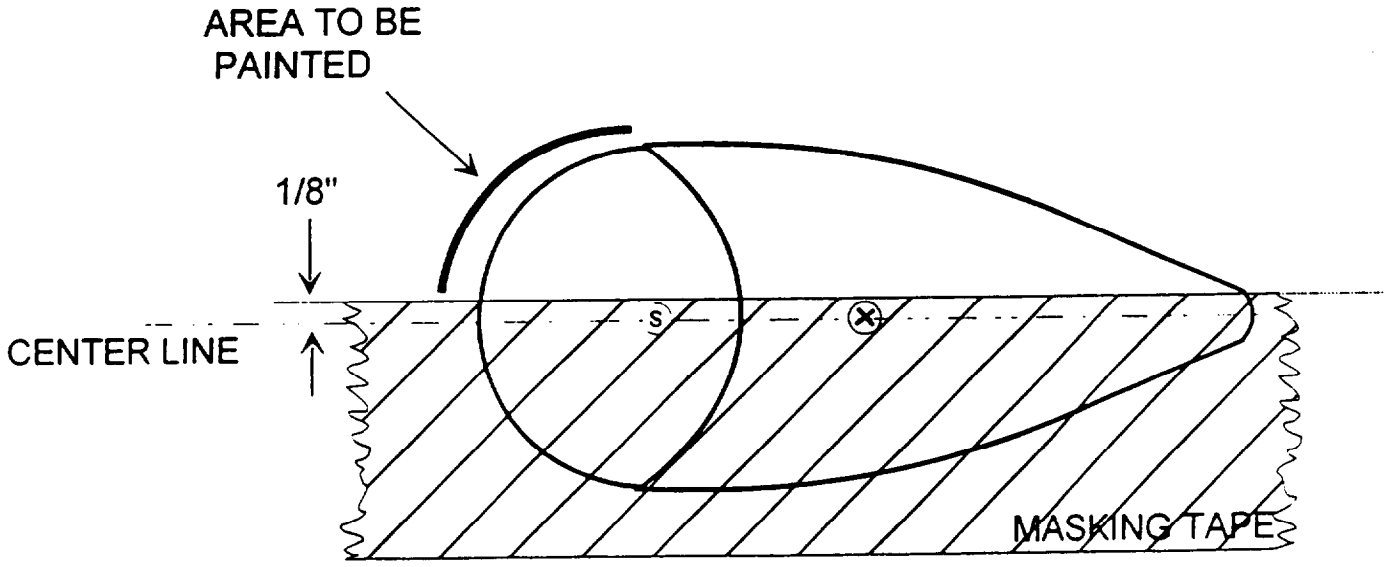

BOTTOM POSITION LIGHT

Figure 9-10.1 Position Light Lens Modifications

9-236. TRANSMISSION OIL LEVEL LIGHT.

9-237. Description - Transmission Oil Level Light. The transmission oil level light (125) is located inside the transmission cowling on the right ado of the helicopter. The light is used to illuminate the transmission sump area so that the transmission oil level light gages will be visible when viewed through the transmission oil level sight glass. The light is powered from the battery system through the BAT VM circuit breaker Pressing the XMSN OIL LVEL LT switch (S4). located beside the sight glass, illuminates the light. Refer to paragraphs 9-5 through 9-11 for maintenance procedure.

9-238. Functional Test - Transmission Oil Level Light. a. Close BAT VM circuit breaker

b. Press pushbutton switch (S4). Check operation of the light through the sight glass in the right hand transmission cowling.

9-239. Troubleshooting - Transmission Oil Level Light. Use table 9-14 and perform checks as necessary to isolate trouble. Tripped circuit breakers are omitted from indication of trouble since such trouble is usually easily detected and corrected. Broken wiring is always a probable case of circuit malfunction or failure and has not been included. (See figure F-20.)

NOTE

Before you use this table, be sure you have performed all normal operational checks.

Table 9-14. Troubleshooting - Transmission Oil Level Light

CONDITION	TEST OR INSPECTION	CORRECTIVE ACTION
1. Transmission oil level light (125) fails to illuminate.	STEP 1. Check for defective transmission oil level light switch (S4).	**Replace switch if defective (paragraph 9-5).**
	STEP 2. Chock for defective BAT VM circuit breaker.	**Replace circuit breaker if defective (paragraph 9-12).**
	STEP 3. Check for defective transmission oil level light assembly.	**Replace lamp assembly if defective (paragraph 9-5).**

SECTION VI. MISCELLANEOUS EQUIPMENT

9-240. MISCELLANEOUS EQUIPMENT.

9-241. Description - Miscellaneous Equipment. Miscellaneous equipment includes engine controls and accessories, flight control systems, blood air heater, muff heater, heated blanket receptacles, utility outlets, windshield wipers. mission antenne actuator system, and cargo hook.

9-242. ENGINE CONTROLS AND ACCESSORIES.

9-243. Description - Engine Controls and Accessories. Engine controls and accessories include engine de-icing, fuel valve, fuel boost pumps, governor control, and idle stop solenoid circuitry.

9-244. ENGINE DE-ICE CIRCUITRY.

9-245. Description — Engine De-ice Circuitry. The engine de-ice system is comprised of an engine hot air de-icing valve (L6) located on the engine, DE-ICE switch (S81) located on the engine control panel, and is protected by a 15 ampere ANTI-ICE ENG circuit breaker. Refer to TM 55-2840-229-24 and paragraphs 9-5 through 9-18 for maintenance procedures.

9-246. Functional Test — Engine De-ice Circuitry. a. Open all circuit breakers, and return all switches to their normal positions.

b. Check that DE-ICE switch (S81) is in OFF position, then close ANTI-ICE ENG circuit breaker. Check that solenoid valve (L6) has actuated.

c. Place DE-ICE switch (S81) in ON position. Check that solenoid valve (L6) is not energized.

d. Return DE-ICE switch (S81) to OFF position and check that solenoid valve has actuated again.

9-247. Troubleshooting — Engine De-ice Circuitry. Use table 9-15 and perform checks as necessary to isolate trouble. (See figure F-30.)

NOTE

Before you use this table, be sure you have performed all normal operational checks.

Table 9-15. Troubleshooting Engine De-ice Circuitry

CONDITION	TEST OR INSPECTION	CORRECTIVE ACTION
1. De-icing solenoid valve (L6) fails to operate when DE-ICE switch (S81) is placed to OFF position.	STEP 1. Ensure that voltage is present on 28 Vdc essential bus and determine if ANTI-ICE ENG circuit breaker is defective.	**Replace circuit breaker if defective (paragraph 9-12).**
	STEP 2. Check for loose connections or broken wiring.	**Repair wiring and/or tighten connections.**
	STEP 3. Check for defective DE-ICE switch (S81).	**Replace switch if defective (paragraph 9-5).**
	STEP 4. Determine if de-icing solenoid valve (L6) is defective.	**Replace hot air solenoid valve if defective. Refer to TM 55-2840-229-24.**

9-248. FUEL BOOST AND FUEL VALVE CIRCUITRY.

9-249. Description — Fuel Boost and Fuel Valve Circuitry. The electrical portion of the fuel control system consists of fuel shutoff valve, fuel switch, left and right fuel cell boost pumps, left and right auxiliary fuel pumps, fuel control relay, RH fuel transfer pump switch, LH fuel transfer pump switch, fuel transfer relay, associated interconnecting wiring, terminal boards, fuel cells and associated switches. The electrical power to the fuel boost and fuel valve system is supplied through, and protected by, the FUEL VALVE (5 ampere), FUEL TANK SUMP PUMP — RIGHT-HAND (7.5 ampere), FUEL TANK SUMP PUMP — LEFT-HAND (7.5 ampere) and FUEL TRANS PUMPS (10 ampere) circuit breakers. The entire fuel boost and valve system serves to supply, regulate and control fuel for operation of the helicopter. Refer to paragraphs 9-5 through 9-18 and Chapter 4 for maintenance procedures.

9-250. Functional Test — Fuel Boost and Fuel Valve Circuitry.

a. Fuel Valve.

(1) Close FUEL VALVE circuit breaker. Position fuel switch (S38) to ON and ensure that fuel valve is open. Repeat procedure with FUEL TANK SUMP PUMP - LEFT-HAND circuit breaker.

(2) Position switch (S38) to OFF and check that fuel valves closes.

b. Fuel Pumps.

(1) Close FUEL BOOST RIGHT circuit breaker. Position fuel switch (S38) to ON. Check that the fuel pump is running and open circuit breaker.

(2) Close FUEL TRANSFER PUMP circuit breaker. Position the right fuel transfer switch (S46) to ON. Check that auxiliary fuel pump is running. When internal auxiliary tank is not installed, check for voltage at pin D on the tank receptacle (J148) and pin A of external fuel control panel plug (P57).

(3) Connect a jumper wire between terminals 2 and 3 of terminal board (TB4) on the access door of the center aft fuel cell (or ground terminal B1 of the fuel control relay (K10) in the electrical compartment). Check for voltage at pin D of receptacle (J148) and pin A of plug (P57).

(4) Connect another jumper wire between terminals 1 and 3 of terminal board (TB4) or ground terminal X1 of relay (K10). Check that relay (K10) shuts off the pump and voltage is not present at pin D of receptacle (J148) and pin A of plug (P57).

(5) Remove jumper from terminals 1 and 3 of terminal board (TB4) or remove ground from Xl of relay (K10). Check that relay (K10) remains energized and voltage is not present at pin D of receptacle (J148) and pin A of plug (P57).

(6) Remove jumper from terminals 2 and 3 of terminal board (TB4) or remove ground from 61 of relay (K10). Check that relay de-energizes and that voltage is present at pin D of receptacle (J148) and pin A of plug (P57). Return switch (S46) to OFF.

(7) Repeat steps (1) through (6) using left side fuel transfer switch (S45) and left side internal auxiliary fuel tank receptacle (J147).

9-251. Troubleshooting — Fuel Boost and Fuel Valve Circuitry. Use system wiring diagram figure F-31 and standard troubleshooting techniques to isolate and correct trouble.

9-252. GOVERNOR CONTROL SYSTEM CIRCUITRY.

9-253. Description — Governor Control System Circuitry. The governor control system consists of an engine control solenoid valve located on engine; and a motor driven rpm actuator also located on engine. Power is supplied by the 28 Vdc essential bus and protected by a 5 ampere GOV CONT circuit breaker located in overhead console. The governor control actuator is energized either by GOV-RPM switch (pilots) or by GOV-RPM switch (copilots). With the switch placed to INCR position the circuit to the actuator motor is completed and allows motor to move actuator arm in one given direction. With the switch in DECR position polarity to the actuator motor is reversed, allowing the actuator arm to move in the opposite direction. The fuel control solenoid valve is energized by the governor AUTO EMER switch located on the engine control panel. Refer to paragraphs 9-5 through 9-18 and Chapter 4 for maintenance procedures.

9-254. Functional Test — Governor Control System Circuitry. a. Close GOV CONT circuit breaker. Position governor switch (S33) to AUTO. Check that fuel control solenoid valve L3 on the

engine is energized in the normal or automatic position (voltage at pin C of P90 on valve).

b. Position switch (S33) to EMER and check that valve is energized in the bypass or emergency position (voltage at pin A of P90) and that GOV EMER indicator on caution panel is illuminated.

c. Return switch (S33) to AUTO and check that GOV EMER indicator is extinguished.

d. Position governor rpm switch (S37) on pilots collective stick to INCR and vernor rpm actuator on the engine retracts.

e. Position switch (S37) to DECR and check that actuator extends.

f. Repeat steps d. and e. using switch (S51) on copilots collective stick.

9-256. Troubleshooting – Governor Control System Circuitry. Use table 9-16 and perform checks as necessary to isolate trouble. (See figure F-32).

NOTE

Before you use this table, be sure you have performed all normal operational checks.

Table 9-16. Troubleshooting Governor Control System Circuitry

CONDITION

TEST OR INSPECTION

CORRECTIVE ACTION

1. Governor actuator (B12) fails to respond when either RPM switch (S37) or (S51) is placed to INCR or DECR position.

STEP 1. Check for faulty wiring or loose connections.

Repair wiring or tighten connections (parapaph 9-10).

STEP 2. Check for defective switch.

Replace switch if defective (paragraph 9-5).

STEP 3. Check for defective governor actuator.

Replace actuator if defective [paragraph 4-128).

2. Governor Actuator (B12) operates in reverse.

Check for reversed wiring at switch (S37 or S51) and actuator (B12).

Reconnect wiring if reversed. (See figure F-32.)

3. Fuel control solenoid valve (L2) fails to operate when GOV SW (S33) is actuated.

STEP 1. Check for defective switch (S33).

Replace switch if defective (paragraph 9-5).

Table 9-16. Troubleshooting of Governor Control System Circuitry (Cont)

CONDITION TEST OR INSPECTION	**CORRECTIVE ACTION**
STEP 2. Check for faulty wiring or loose connections.	**Repair wiring and tighten connections paragraph 9-10).**
STEP 3. Check for defective fuel control solenoid valve (L2).	**Replace valve if defective. Refer to TM 55-2840-229-23.**
4. Solenoid valve operates in reverse	**Check for reversed wiring at switch (S33) or solenoid valve (L2)**
	Reconnect wiring if reversed. (See figure F-32.)

9-256. IDLE STOP SYSTEM CIRCUITRY.

9-257. Description-Idle Stop System Circuitry. The idle stop system consists of an idle stop release solenoid, an idle stop release switch located on pilots collective stick and a 7.5 ampere IDLE STOP RELEASE circuit breaker which protects the system against overload. Refer to paragraphs 9-5 through 9-18 and 4-113 for maintenance procedures.

9-258. Functional Test—Idle Stop System Circuitry. a. Close IDLE STOP REL circuit breaker.

b. Actuate the idle stop release switch (S50) on the pilots collective stick and check that solenoid retracts when power is applied.

9-259. Troubleshooting-Idle Stop System Circuit. Refer to system wiring diagram, figure F-32, and use standard troubleshooting procedures to isolate and correct malfunctions.

9-260. FLIGHT CONTROL SYSTEMS (ELECTRICAL).

9-261. Description—Flight Control Systems (Electrical). The flight control systems include the force trim and hydraulic control systems.

9-262. FORCE TRIM SYSTEM CIRCUITRY.

9-263. Description-Force Trim System Circuitry. The force trim system consists of an antitorque force trim magnetic brake, a fore and aft force trim magnetic brake, a lateral force trim magnetic brake, pilot and copilot force trim switches, and a master force trim switch located on the hydraulic control panel. The magnetic brakes are wired in parallel. The force trim switches are all series wired. The system is protected by a 5 ampere FORCE TRIM circuit breaker located in overhead console. The entire system serves to return pilot and copilot cyclic sticks to desired initial position when master force trim switch is set to ON. Pilot and copilot force trim switches may be triggered to reenergize brakes and eliminate centering force. Refer to paragraphs 9-5 through 9-18, 11-37, and 11-63 for maintenance procedures.

9-264. Functional Test—Force Trim System Circuitry. a. Close FORCE TRIM circuit breaker. Position force trim switch (S68) to ON. Check the cyclic stick and pedals for centering force.

b. Depress force trim switch (S18) on the pilots cyclic stick. Check that the three magnetic brakes reenergize and that there is no centering force in the cyclic stick and pedals.

c. Repeat step b. using switch (S10) on the copilots cyclic stick.

9-266. Troubleshooting — Force Trim System Circuitry. Use table 9-17 and perform checks as necessary to isolate trouble. (See figure F-33.)

NOTE

Before you use this table, be sure you have performed all normal operational checks.

Table 9-17. Troubleshooting Force Trim System Circuitry

CONDITION TEST OR INSPECTION	**CORRECTIVE ACTION**
1. All magnetic brakes fail to energize with FORCE TRIM switch in ON position.	
STEP 1. Check for faulty wiring or loose connections.	**Repair wiring or tighten connections (paragraph 9-10).**
STEP 2. Check for defective FORCE TRIM switch.	**Replace switch if defective (paragraph 9-5).**
2. Any magnetic brake fails to energize with FORCE TRIM switch in ON position.	
Check for defective magnetic brake.	**Replace magnetic brake if defective (paragraphs 11-37 and 11-63).**
3. Magnetic brakes fail to de-energize when pilot or copilot FORCE TRIM switch is depressed.	
STEP 1. Check for defective FORCE TRIM switch.	**Replace switch if defective (paragraph 9-5).**
STEP 2. Check for shorted wiring.	**Repair wiring (paragraph 9-10).**

9-266. HYDRAULIC CONTROL SYSTEM CIRCUITRY.

9-267. Description — Hydraulic Control System Circuitry. The hydraulic system is composed of a hydraulic solenoid valve mounted on the lift beam of the transmission. The valve is controlled by the HYD CONT switch on the hydraulic control panel and protected by a 5 ampere hydraulic control circuit breaker located on the overhead console. The valve is normally de-energized in ON position. This valve closes off hydraulic pump pressure to the flight control servos and allows unrestricted fluid flow to and from the servos when the control switch is in the closed (OFF) position. Manual operation of flight controls is then possible.

9-268. Functional Test — Hydraulic Control System Circuitry. a. Close HYD CONT circuit breaker. With external hydraulic pressure applied,

position hydraulic control switch (S7) to OFF. Close CAUTION LIGHTS circuit breaker and check that HYD PRESSURE caution light illuminates.

b. Operate the cyclic, collective and directional controls with switch (S7) in the ON and OFF positions. Check that controls require more force to operate with switch (S7) in the OFF position than in the ON position.

9-269. Troubleshooting — Hydraulic Control System Circuitry. Use table 9-18 and perform checks as necessary to isolate trouble. (See figure F-33).

NOTE

Before you use this table, be sure you have performed all normal operational checks.

Table 9-18. Troubleshooting Hydraulic Control System Circuitry

CONDITION TEST OR INSPECTION	**CORRECTIVE ACTION**
1. Hydraulic solenoid fails to actuate when hydrualic control switch is placed to OFF position.	
STEP 1. Check for defective HYD CONT circuit breaker.	**Replace circuit breaker if defective (paragraph 9-12).**
STEP 2. Check for faulty wiring or loose connections.	**Repair wiring or tighten connections (paragraph 9-10).**
STEP 3. Check for defective hydraulic control switch (S7).	**Replace switch if defective (paragraph 9-5).**
STEP 4. Check for defective hydraulic bypass solenoid valve (L4).	**Replace solenoid valve if defective (paragraph 7-60).**

9-270. BLEED AIR HEATING SYSTEM CIRCUITRY.

9-271. Description — Bleed Air Heating System Circuitry. The bleed air heating circuitry includes bleed air switch (S83) overheat switch (S73), bleed air valve (B34), overheat relay (K46), aft outlet valve (L15), door post outlet valve actuator (L14), aft outlet switch (S85), aft outlet limit switch (S87), and on helicopter S/N 66-16867 and subsequent, variable mixture solenoid valve (L21). The circuitry is protected by the CABIN HEATER CONT and CABIN HEATER OUTLET VALVE circuit breakers. Refer to paragraphs 9-5 through 9-18 and chapter 4 for maintenance and troubleshooting procedures. (See figure F-34.)

9-272. Functional Test — Bleed Air Heating System Circuitry. a. Prior to helicopter Serial No. 66-16868, accomplish the following:

(1) Close CABIN HEATER CONT circuit breaker. Actuate bleed air switch (S83) from off to positions 1, 2, 3, and 4. Check that bleed air valve opens to a maximum at position 4.

(2) Actuate aft outlet switch (S85)from OFF to position 1, 2, and 3. Check that the door post outlet valve opens to a maximum at position 3.

(3) With switch (S85) in position 3, move the manual defrost lever to the full ON position. Check that the door post outlet valve returns to its closed position.

(4) Move manual defrost lever slightly toward the OFF position. Check that the door post outlet valve switch returns to position 3.

(5) Place switch (S83) in any position (1, 2, 3, or 4) except OFF. Obtain access to relay (K46) behind heater panel in overhead console. Find wire H110A20 attached to a terminal of relay (K46). Temporarily jump this relay terminal to ground, thus simulating on overheat condition. Check that the bleed air valve returns to the off or closed position.

(6) Remove the temporary jumper. Check that the bleed air valve returns to its preset position.

b. For helicopter Serial No. 66-16868 and subsequent, accomplish the following:

(1) Close CABIN HEATER AIR VALVE and CABIN HEATER OUTLET VALVE circuit breakers.

(2) Actuate bleed air switch (S83) to the ON position and then to OFF. Check that variable mixture solenoid valve (L21) makes an audible click when switch (S83) is switched to both ON and OFF positions.

(3) Actuate aft outlet switch (S85) from OFF to positions 1,2, and 3. Check that the doorpost outlet valve opens to a maximum at position 3.

(4) With switch (S85) in position 3, move the aft outlet limit lever to the full ON position. Check that the door post outlet valve returns to its closed position.

(5) Move the aft outlet limit lever slightly toward the OFF position. Check that the door post outlet valve switch returns to position 3.

(6) Position bleed air switch (S83) to ON. Obtain access to relay (K46) behind heater panel in overhead console. Find wire H110A20 attached to a terminal of relay (K46). Temporarily jump this relay terminal to ground, thus simulating an overheat condition. Check that the variable mixture solenoid (L21) makes an audible click, thus signifying the off or closed position.

(7) Remove the temporary jumper. Check that the variable mixture solenoid valve makes an audible click, thus signfying its return to the on or open position.

9-273. MUFF HEATER SYSTEM CIRCUITRY.

9-274. Description - Muff Heater System Circuitry. The muff heater circuitry utilizes same components as bleed air heater circuitry with the addition of aft outlet valve. Refer to paragraph 9-271 for description. Refer to paragraphs 9-5 through 9-18 and paragraph 13-39 for maintenance and troubleshooting procedures. (See figure F-34.)

9-275. Functional Test— Muff Heater System Circuitry. a. For helicopters prior to Serial No. 66-16868, accomplish the following:

(1) Check that wire H86A20 is connected to terminal 16 (position 3) instead of terminal 13 of switch (S85). Close CABIN HEATER CONT circuit breaker.

(2) Move switch (S85) to OFF and then in turn to positions 1, 2, and 3. Check that the door post outlet valve and the aft outlet valve are closed when switch (S85) is in the OFF position and full-on when switch (S85) is in position 3.

(3) With switch (S85) in position 1 or 2, move the manual defrost lever to the full-on position. This actuates switch (S87). Check that the doorpost outlet valve and the aft outlet valve are at the off or closed position.

(4) Move manual defrost lever slightly toward the OFF position so that switch (S87) is deactivated. Check that the door post outlet valve and the aft outlet valve return to their preset positions.

(5) Place switch (S83) in any position (1,2,3, or 4) except OFF. Obtain access to relay (K46) behind heater panel in overhead console. Find wire H110A20 attached to a terminal of (K46) relay. Temporarily jump this relay terminal to ground, thus simulating an overheat condition. Check that bleed air valve returns to the off or closed position.

(6) Remove the temporary jumper. Check that the bleed air valve returns to its preset position.

(7) Move switch (S83) to OFF and then in turn to positions 1, 2, 3, and 4. Check that the bleed air valve is closed when switch (S83) is in the OFF position and full-on when switch (S83) is in position 4.

b. For helicopter Serial No. 66-16868 and subsequent, accomplish the following:

(1) Check that wire H86A20 is connected to terminal 16 (position 3) instead of terminal 13 of switch (S85). Close CABIN HEATER AIR VALVE circuit breaker.

(2) Move switch (S85) to OFF and then in turn to positions 1,2, and 3. Check that the door post outlet valve and the aft outlet valve are dosed when switch (S85) is in the OFF position and full-on when switch (S85) is in position 3.

(3) Move switch (S85) to position 1 or 2. Then the aft outlet lever to full-on position. This actuates switch (S87). Check that the door post outlet valve is in the full-open position and the aft outlet valve is in the closed position.

(4) Move aft outlet limit lever slightly toward the OFF position so that the door post outlet valve and the aft outlet valve return to their preset positions.

(5) Position switch (S83) to ON. Obtain access to relay 0(K-46) behind heater panel in overhead console. Find wire H110A20 attached to a terminal of (K-46) relay. Temporarily jump this relay terminal to ground, thus simulating an overheat condition. Check that the bleed air valve (B34) closes.

(6) Position switch (S82) to OFF and then ON. Check that bleed air valve (B34) remains closed.

(7) Remove temporary jumper. Check that the bleed air valve (B34) opens.

(8) Position switch (S82) to OFF. Check that the bleed air valve (B34) closes.

9-276. HEATED BLANKET RECEPTACLES.

9-277. Description Heated Blanket Receptacles. Heated blanket receptacles are provided in the cabin interior, right and left side cabin roof. These utility receptacles are supplied by the 28 Vdc nonessential bus and protected by the 35 ampere HEATED BLANKETS R/H and HEATED BLANKETS L/H circuit breakers. Refer to paragraphs 9-5 through 9-18 for maintenance procedures.

9-278. Functional Test Heated Blanket Receptacles.

a. Close both HEATED BLANKET circuit breakers.

b. Check for 28 Vdc at each receptacle mounted in the cabin roof. (Six receptacles on all aircraft prior to Serial No. 66-16034 and two receptacles on Serial No. 66-16034 and subsequent).

9-279. Troubleshooting Heated Blanket Receptacles. Refer to system wiring diagram figure F-35 and use standard troubleshooting procedures to isolate and correct malfunction.

9-280. WINDSHIELD WIPER SYSTEM CIRCUITRY.

9-281. Description Windshield Wiper System Circuitry. The windshield wiper system includes windshield wiper switch (S23), selector switch (S124), right and left resistor panels (A-13), pilot windshield wiper motor (B7), and copilot windshield wiper motor (B8). Power for the system is furnished by the 28 Vdc essential bus and protected by 10 ampere WINDSHIELD WIPER PILOT and WINDSHIELD WIPER COPILOT circuit breakers. Refer to paragraphs 9-5 through 9-18 and Chapter 12 for maintenance and troubleshooting procedures. (See figure F-36.) 9-282. Functional Test Windshield Wiper System Circuitry.

a. Suitably protect windshield against scratching by wiper blades.

b. Close WINDSHIELD WIPER PILOT and WINDSHIELD WIPER COPILOT circuit breakers. Position wiper selector switch (SI24) to BOTH. Position windshield wiper switch (S23) to LOW. Check that pilot and copilot wipers operate at low speed.

c. Position switch (S23) to MED position. Check that both wipers operate at medium speed.

d. Position switch (S23) to HIGH. Check that both wipers operate at high speed.

e. Position switch (S23) to PARK. Check that both wipers move at high speed to their park positions and stop.

f. Open WINDSHIELD WIPER COPILOT circuit breaker. Position selector switch (S124) to PILOT.

g. Open WINDSHIELD WIPER PILOT circuit breaker. Close WINDSHIELD WIPER COPILOT circuit breaker. Position selector switch (S124) to COPILOT. Check that copilot wiper operates with wiper switch (S23) in the LOW, MED, HIGH, and PARK positions. Position wiper switch (S23) to OFF and open the WINDSHIELD WIPER COPILOT circuit breaker.

9-283. CARGO HOOK SYSTEM CIRCUITRY.

9-284. Description - Cargo Hook System Circuitry. The cargo hook system circuitry includes cargo release switch (S36), cargo release armed light (I44), copilot cyclic stick release switch (S78), pilot cyclic stick release switch (S32), and cargo hook release relay (K24). Power for the system is supplied by the 28 Vdc essential bus and protected by the 10 ampere CARGO HOOK REL circuit breaker. Refer to paragraphs 9-5 through 9-18 and Chapter 14 for maintenance and troubleshooting procedures. (See figure F-37.)

9-285. Functional Test - Cargo Hook System Circuitry.

a. Close CARGO HOOK REL circuit breaker. Close and latch the hook. Position the cargo release switch to ARM. Check that cargo release armed light on the instrument panel is illuminated.

b. Depress cargo release switch (S32) on the pilot cyclic stick. Check that solenoid in the hook actuates allowing the hook to fall open.

c. Repeat step b. for switch (S78) on the copilots cyclic stick.

9-286. RESCUE HOIST SYSTEM CIRCUITRY (PROVISIONS).

9-287. Description - Rescue Hoist System Circuitry. The rescue hoist system circuitry includes HOIST PWR, HOIST CONT, and HOIST CUT circuit breakers, hoist switch (S112), cable cutter switch (S96), hoist power relay (K32), and overload sense control (S101). Refer to paragraphs 9-5 through 9-18 for maintenance and troubeshooting procedures. (See figure F-38.)

9-288. Functional Test - Rescue Hoist System Circuitry.

a. Check that wire M20A20 is connected to HOIST PWR circuit breaker (1 ampere).

b. Check that wires M21A20 and M22A20 are connected to HOIST CONT circuit breaker (10 ampere).

c. Check that wire M25A20 is connected to HOIST CUT circuit breaker (5 ampere).

NOTE

The following checks are basically voltage (28 Vdc) checks between the designated pin of connector (J119) and ground (pin X of J119).

d. Close HOIST CONT circuit breaker and measure for 28 Vdc on pin G of connector (J119).

e. Open HOIST CONT circuit breaker and measure for zero Vdc on pin G of connector (J119).

f. Close HOIST CONT circuit breaker. Position HOIST switch (S112) (located on pilot cyclic stick) to DN. Measure for 28 Vdc on pin C of connector (J119).

g. Release HOIST switch (S112) and measure for zero Vdc on pin C of connector (J119).

h. Position HOIST switch (S112) to RH/OUT, and measure for 28 Vdc on pin D of connector (J119).

i. Release HOIST switch (S112) and measure for zero Vdc on pin D of connector (J119).

j. Position HOIST switch (S112) to UP, and measure for 28 Vdc on pin E of connector (J119).

k Release HOIST switch (S112) and measure for zero Vdc on pin E of connector (J119).

l. Position HOIST switch (S112) to LH/IN and measure for 28 Vdc on pin F of connector (J119).

m. Release HOIST switch (S112) and measure for zero Vdc on pin F of connector (J119).

n. Close HOIST CUT circuit breaker. Close CABLE CUT switch (S96) (located on pedestal). Measure for 28 Vdc on pin H of connector (J119).

o. Open CABLE CUT switch (S96) and measure for zero Vdc on pin H of connector (J119).

p. Close NON ESS BUS switch (S62). Close HOIST PWR circuit breaker and measure for 28 Vdc on pin W of connector (J119).

q. Open HOIST PWR circuit breaker and measure for zero Vdc on pin W of connector (J119).

r. Position all circuit breakers and switches to OFF.

s. Position crew HOT MIC switch (S66) to OFF and measure resistance between Pins J and K of (J119). The resistance should be 500 ohms or greater if ICS units are installed or infinite if ICS units are not installed.

t. Position crew HOT MIC switch (S66) to ON and measure resistance between pins J and K of connector (J119). The resistance should be zero ohms.

u. Hold screw HOT MIC switch in MOM position and measure resistance between pins J and K of connector (J119). The resistance should be zero ohms.

v. Position crew HOT MIC switch (S66) to OFF. Disconnect multimeter.

Paragraphs 9-289 through 9-292 have been deleted.

Pages 9-105 through 9-121, including paragraphs 9-293 through 9-329 and figures 9-11,9-12,9-13, 9-14, 9-15, 9-16, and 9-17, have been deleted.

f. Carefully lower mount assembly from helicopter.

g. Place the mount assembly on a suitable workbench.

h. Remove the antenna mount bottom cover (19) by removing 8 screws (29).

i. Unscrew antenna whip (16) from antenna base assembly (14).

9-293. Cleaning - Forward Mission Antenna Mount Assembly. Clean the entire antenna mount assembly including the actuator with low pressure filtered compressed air. Use a lint-free dry cloth where necessary.

NOTE

Heavy caked grease or dirt may be removed by dampening a stiff, non-wire brush or a clean cloth with cleaning solvent (C290) and wiping the parts. Dry parts thoroughly with a lint-free cloth or filtered compressed air.

9-294. Inspection - Forward Mission Antenna Mount Assembly. a. Inspect condition of airframe surrounding the forward antenna mount assembly for cleanliness, cracks, corrosion, and loose or missing rivets.

b. Inspect antenna mount assembly for cracks, corrosion, damage and improperly installed hardware.

c. Inspect clevis pin and bushings for looseness and wear.

d. Inspect actuator for damage or evidence of malfunction.

e. Inspect electrical cable and connector for condition and security.

f. Inspect rod end bearing for wear not to exceed 0.010 inch axial or 0.010 inch radial play.

g. Inspect extend and retract limit switches for condition, electrical cables and mount for security and signs of chafing or wear.

h. Inspect antenna RF cable and connector for damage and security.

9-295. Repair or Replacement - Forward Mission Antenna Mount Assembly. a. Replace actuator as an assembly if damage is found or malfunction occurs. (Refer to paragraphs 9-297 and 9-303.)

b. Replace antenna mount assembly if damaged or excessive wear is found. (Refer to paragraph 9-303 for alignment procedures.)

CAUTION

Antenna mount assembly OE-201/ARQ-33 alignment procedures are mandatory If the actuator or limit switches are replaced. Adjustment of the antenna extend-retract limit switches and actuator stroke is critical. The actuator is capable of producing a force in excess of 1200 pounds with resulting component and structural damage if incorrectly set.

Refer to TM 11-5895-776-14-1 for operation, troubleshooting and maintenance procedures for the AN/ARQ-33 mission antenna system.

9-296. Installation - Forward Mission Antenna Mount Assembly. a. Ensure that threaded surfaces are clean, then carefully screw the antenna whip (16, figure 9-11) into the antenna base assembly (14).

b. Install the antenna mount bottom cover (19) with eight screws (29).

c. Locate the mount assembly in position and install four bolts (20) and washers (21) to secure mount assembly to the helicopter.

d. Connect mount assembly electrical connector 27J1 (27).

e. Connect antenna cable RF connector to the mount assembly.

9-297. Forward Mission Antenna Mount Linear Actuator (figure 9-11).

9-298. Removal - Forward Mission Antenna Mount Linear Actuator (paragraph 9-291). a. Disconnect antenna RF cable from antenna base assembly.

b. Disconnect linear actuator power cable connector plug (6).

c. Remove cotter pins (3), washers (2) and clevis rod (4) from the fitting end of the actuator (7).

d. Remove cotter pin (9), washer (24) and clevis pin (10) from the coupling end and remove actuator from the mount assembly.

9-299. Cleaning - Forward Mission Antenna Mount Linear Actuator. Refer to paragraph 9-293.

9-300. Inspect Ion - Forward Mission Antenna Mount Linear Actuator. a. Inspect actuator for dents, cracks and corrosion.

b. Inspect fitting assembly and coupling bushings for wear.

c. Inspect nut tube for signs of chafing or binding.

d. Inspect for any sign of overheating.

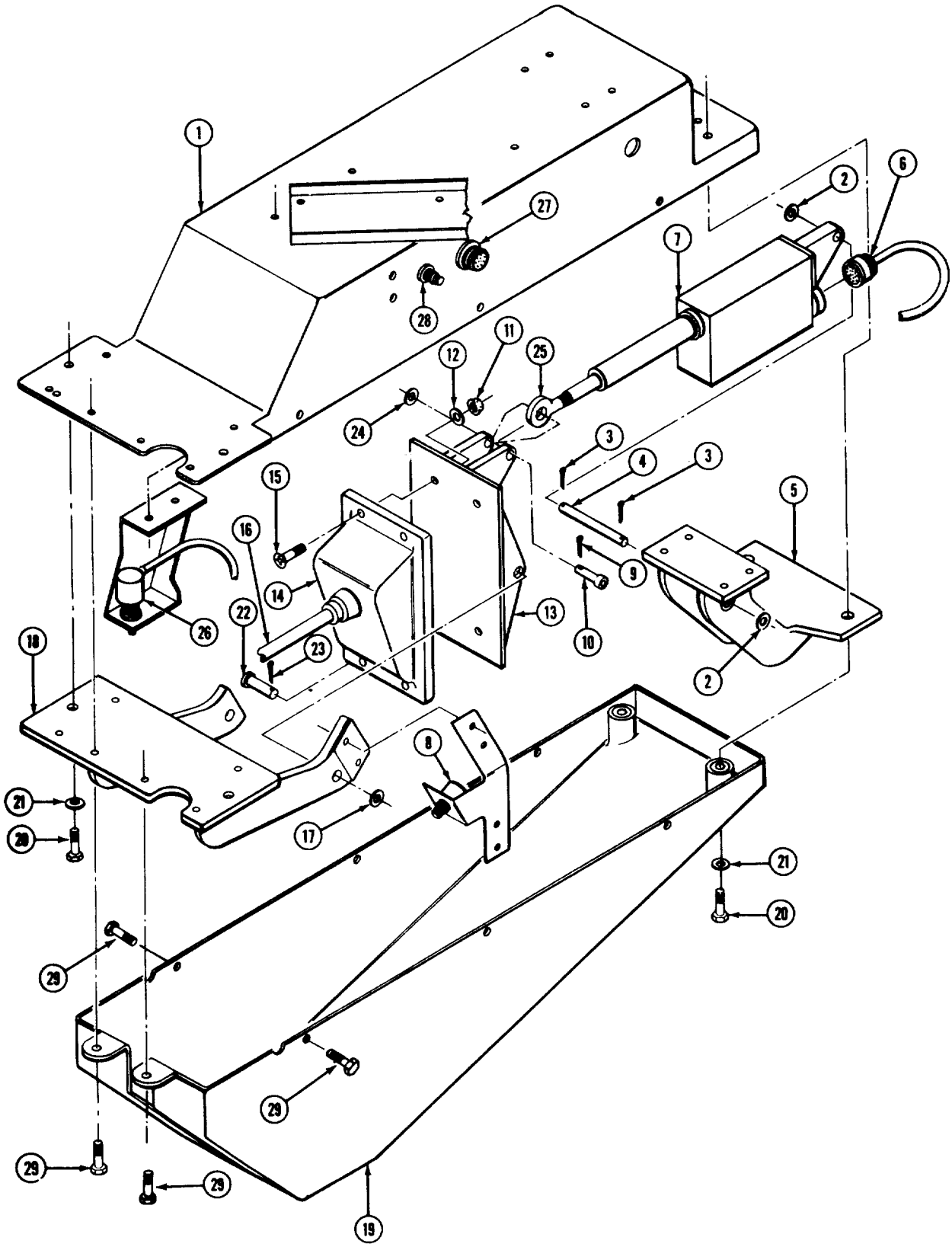

Figure 9-11. Forward Mission Antenna Mount, OE-201/ARQ-33 (Sheet 1 of 2)

1. TOP COVER ASSY
2. WASHER
3. COTTER PIN
4. CLEVIS ROD
5. CLEVIS ASSY (FORWARD)
6. ACTUATOR ELECTRICAL CABLE CONNECTOR
7. ELECTRO-MECHANICAL LINEAR ACTUATOR
8. RETRACT LIMIT SWITCH
9. COTTER PIN
10. COUPLING CLEVIS PIN
11. NUT
12. WASH E R
13. CLEVIS ASSY (ANTENNA BASE)
14, ANTENNA BASE ASSY
15. SCREW
16. ANTENNAWHIP
17. WASHER
18. CLEVIS ASSY (AFT)
19. BOTTOM COVER
20. MOUNTING BOLT
21. WASHER
22. CLEVIS PIN
23. COTTER PIN
24. WASHER
25. ACTUATOR
26. EXTEND LIMIT SWITCH
27. ELECTRICAL RECEPTACLE 27J1
28. MOUNT ANTENNA CABLE CONNECTOR
29. SCREW

Figure 9-11. Forward Mission Antenna Mount, OE-201/ARQ-33 (Sheet 2 of 2)

9-301. Repair or Replacement - Forward Mission Antenna Mount Linear Actuator. Actuators which have been removed from a mount assembly and satisfactorily pass inspection will be reinstalled on the mount from which they were removed. Full alignment procedures will otherwise be required. (Refer to paragraph 9-303.)

CAUTION

The actuator coupling must not be rotated while the actuator is removed.

9-302. Installation - Forward Mission Antenna Mount Linear Actuator. a. Locate the actuator in the mount assembly with the coupling end toward the antenna base assembly (14, figure 9-11).

b. Install clevis pin (10), cotter pin (9) and washer (24).

c. Install clevis rod (4), cotter pins (3) and washers (2).

d. Connect linear actuator electrical connector (6).

e. Connect RF cable to antenna base assembly.

8-303. Forward Mission Antenna OE-201/ARQ-33 Alignment Procedure.

8-304. Pre-Installation Procedures - Forward Mission Antenna Alignment Procedure. a. Connect the positive terminal of a 28 Vdc source to pin C of the actuator (7, figure 9-11) and common to pin E and apply power.

b. Allow the actuator to retract completely then remove power.

c. Measure dimension A of figure 9-12 and adjust the actuator coupling as required in 180 degree increments to obtain 11 ± 1/16 inches.

d. Disconnect the +28 Vdc test line from pin C of the actuator and connect it to pin B. Apply power.

e. Allow the actuator to extend completely then remove power.

f. Measure dimension A of figure 9-12. Measurement shall be 16 ± 1/16 inches.

g. Disconnect the +28 Vdc test line from pin B of the actuator and connect it to pin C.

h. Apply power and allow the actuator to retract until dimension A measures approximately 14 inches.

i. Remove power. Disconnect test leads from actuator.

CAUTION

If the actuator measurement in paragraph 9-304.f. is out of tolerance, the actuator must be rejected.

8-305. Bench Alignment Setup. a. Disconnect antenna cable from antenna base (14, figure 9-11) and secure cable.

b. Remove antenna base by removing four screws (15).

NOTE

Bench alignment should be accomplished on a smooth, flat workbench which has been leveled. The alignment blocks should be of equal thickness, with a minimum of 7/8 inch required.

c. Install actuator (7) in mount assembly using clevis pins (4 and 10), washers (2 and 24) and cotter pins (3 and 9).

d. Connect wiring harness to actuator electrical connector (6).

e. Set antenna mount assembly on blocks as shown in figure 9-13.

f. Measure and record angle A using propeller protractor 36D2844. This measurement is taken on the surface of the workbench along a line parallel to the centerline of the assembly.

NOTE

Angle A may be measured as a positive or negative angle between 0° and 90°. Angle A will be positive if measured counterclockwise and negative if measured clockwise.

9-306. Retract Limit Switch (27S1) Alignment. a. Adjust the jam nuts such that retract limit switch (8, figure 9-11) protrudes through its mounting bracket approximately its full length.

b. Jumper pins H and K of receptacle 27J1 (27).

c. Connect +28 Vdc source to pin G and common to pin J of the 27J1

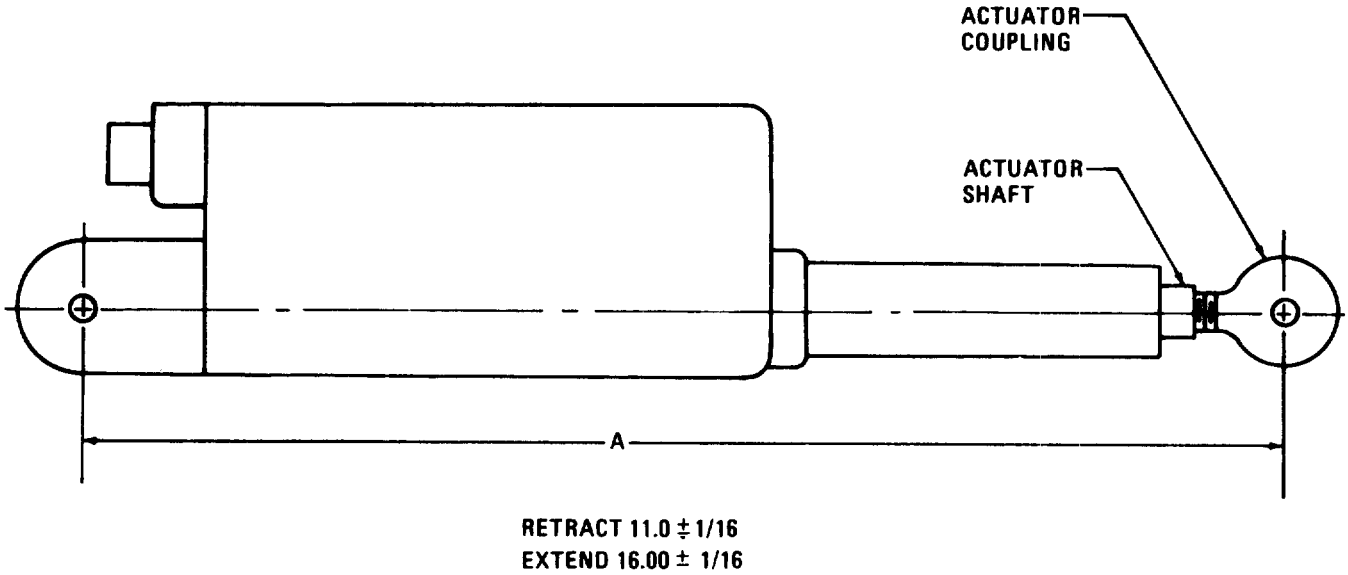

Figure 9-12. Actuator Pre-Installation Measurements

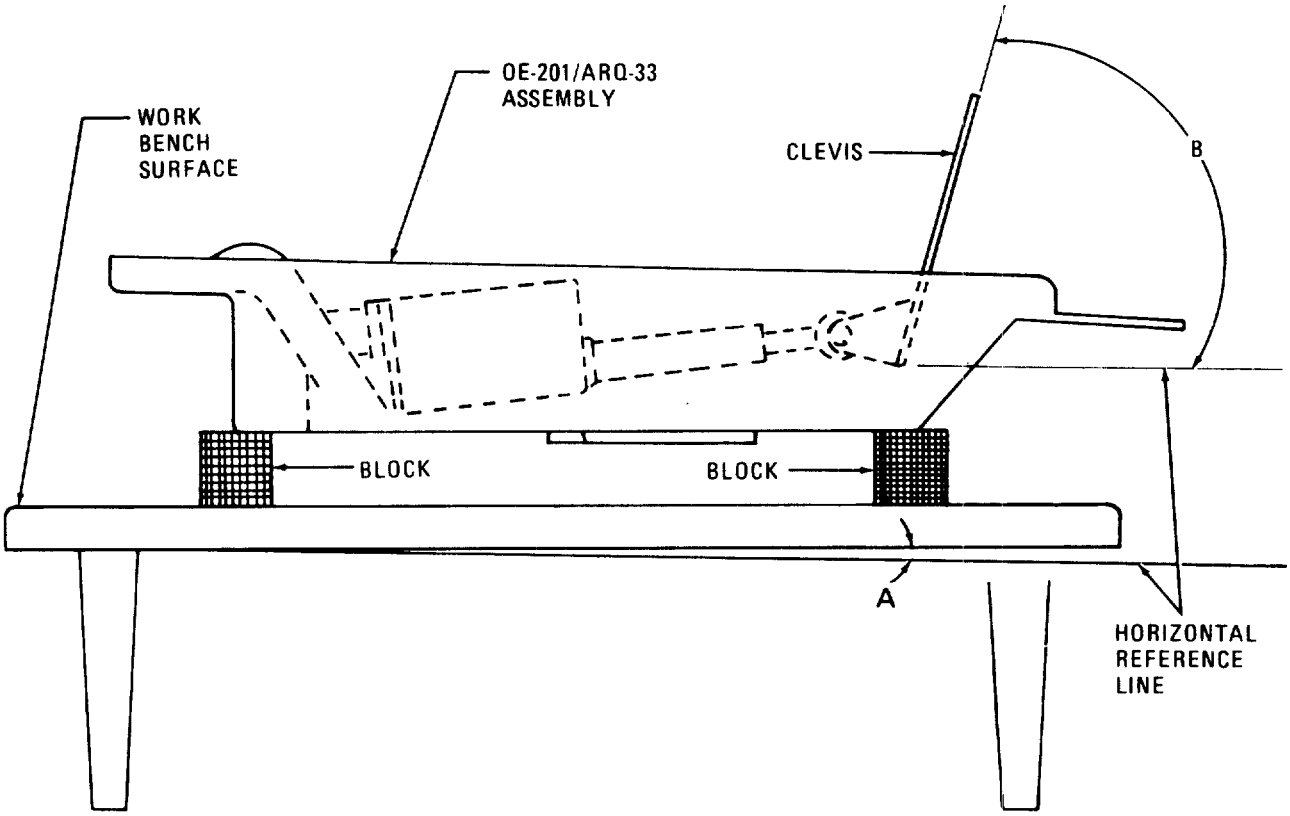

Figure 9-13. Antenna Mount Assembly Retract Limit Switch Bench Setup

218-260 O - 88 - 9

d. Apply power and allow actuator to retract until it stops.

e. Remove power and disconnect lead from pin G.

f. Place the propeller protractor P/N 36D2844 along the centerline on the face of the antenna base clevis (13). Measure and record angle B (figure 9-13).

NOTE

Angle B is a positive angle between 0° and 90°. B should measure 73° plus angle A within a tolerance of ± 1/2°. Thus B = 73° + A with ± 1/2° tolerance. If A was measured as a negative angle, the minus sign must be included within the parentheses.

g. If angle B is not within the above tolerance, the actuator must be partially extended and the retract limit switch adjusted.

h. Connect +28 Vdc source to pin M.

i. Momentarily apply power. The actuator will partially extend.

j. Adjust the length of the switch which extends through the mounting bracket to achieve proper retract angle B.

k. Repeat steps a. through i. until angle B is within the limits described above.

l. Tighten both jamnuts on the retract limit switch.

m. Repeat steps b. through f. to ensure that angle B remained in tolerance.

n. Lockwire jamnuts together.

o. Repeat steps b. through f. to ensure that angle B remained in tolerance.

p. Remove power and remove jumper from 27J1.

9-307. Actuator Coupling Alignment. a. Connect +28 Vdc source line to pin K of 27J1 and common to pin J.

b. Apply power and allow actuator to retract fully. The actuator will be stopped by its internal retract limit switch.

c. Remove power.

d. Repeat angle B measurement procedure. (Refer to paragraph 9-305.f.)

CAUTION

Check the 1/4 inch overtravel of the retract limit switch (8, figure 9-11) plunger. The plunger must not be bottomed in the switch body.

e. Angle B should measure 69° plus angle A within a tolerance of ± 1/2°. B = 69° + A with ± 1/2° tolerance.

NOTE

Angle A will remain constant as measured in paragraph 9-303.f. unless the test bench or alignment blocks are removed. Ensure that the positive or negative signs for angle A are used in all calculations.

f. If angle B measures less than the minimum allowed in paragraph 9-306.f., the actuator stroke must be adjusted by rotating the actuator coupling counterclockwise in 180° increments. If angle B measures greater than the maximum allowed in step e., the actuator stroke must be adjusted by rotating the actuator coupling clockwise in 180° increments.

g. Partially extend actuator (paragraphs 9-306.h. and 9-306.i.).

h. Remove the coupling clevis pin (10, figure 9-11).

i. Rotate the actuator coupling in 180° increments clockwise or counterclockwise as required to adjust angle B, step f.

NOTE

To ensure that the coupling remains secure in the actuator shaft, do not lengthen the stroke excessively (counterclockwise rotation). The nylon insert enclosed in the coupling threads must not protrude beyond the end of the actuator shaft threads.

j. Reinstall coupling clevis pin (10).

k. Repeat steps a. through j. until angle B is within tolerance,

l. Remove power.

9-308. Extend Limit Switch (27S2) alignment. a. Adjust the jam nuts such that the extend limit switch (26, figure 9-11) protrudes through its mounting bracket approximately its full length.

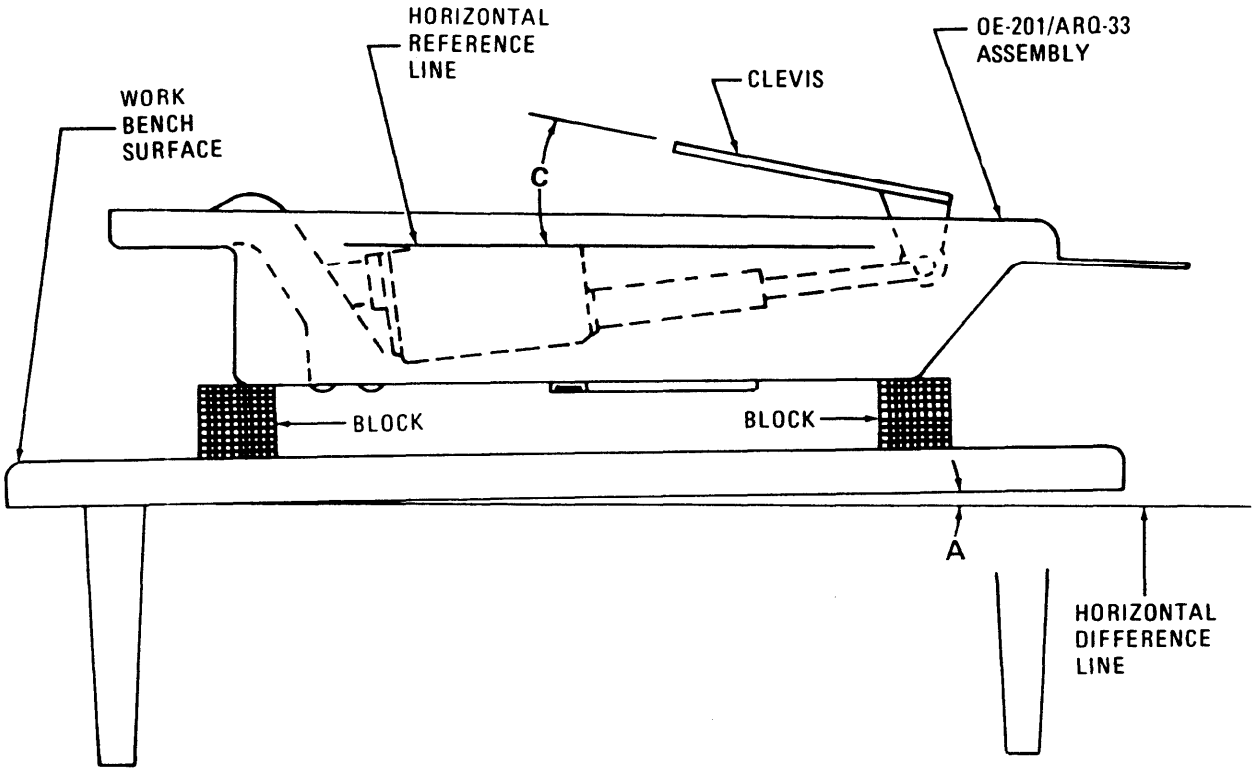

Figure 9-14. Antenna Mount Assembly Extended Limited Switch Bench Setup

NOTE

Ensure that the extend limit switch and mounting bracket are positioned such that the switch plunger makes contact with the striker along the striker centerline.

b. Jumper pins D and M of 27J1.

c. Connect +28 Vdc source line to pin C of 27J1 and common to pin J.

d. Apply power and allow the actuator to extend until stopped by the extend limit switch.

e. Remove power.

f. Place the propeller protractor P/N 36D2844 along the centerline on the face of the clevis and measure and record angle C (figure 9-14). Angle C is a positive angle between 0° and 90°.

g. Angle C should measure 10° minus angle A within a tolerance of ± 1/2°. C = 10° - A ± 1/2° tolerance. Ensure that the sign of angle A is used when making the calculation.

h. If angle C is not within limits of step g., the actuator must be partially retracted and the extend limit switch adjusted.

i. Disconnect ± 28 Vdc source line pin C of 27J1 and connect it to pin K.

j. Momentarily apply power.

k. Repeat steps b. through j. as necessary until angle C is in tolerance.

l. Tighten both jamnuts on the extend limit switch (26).

m. Repeat steps b. through g. to ensure that angle C remained in tolerance.

n. Lockwire jamnuts together.

o. Repeat steps b. through g. to ensure that angle C remained in tolerance.

p. Remove power.

9-309. Final Alignment Check. a. Connect +28 Vdc source line to pin M of 27J1 and common to pin J.

b. Apply power and allow the actuator to extend until stopped by the actuator internal limit switch.

c. Check the 1/4 inch overtravel of the extend limit switch plunger. If the plunger is bottomed in the switch body, the alignment procedures of paragraphs 9-304 through 9-307 must be repeated.

9-310. Aft Mission Mount EX. Antenna Mount, OE 202/ARQ-33 OE-330/ALQ-151 (Fig. 9-15 and 9-16).

NOTE

Both OE-202 EB and OE-330 X assemblies are identical from a structural viewpoint. Only minor wiring changes make the above different.

9-311. Removal - Aft Mission Antenna Mount. a. Make certain that all electrical power is off.

b. Pull the FWD and AFT RETR ANT CONT and RADAR ALTM circuit breakers.

NOTE

The aft mission antenna mount cannot be removed as an assembly.

c. Remove four screws (39, figure 9-16) and washers (38) from rear edges and six screws (37) from each side of antenna mount cover (36).

d. Remove antenna mount cover.

e. Cut lockwire and remove two screws (8) holding whip antenna (9) to antenna coupler (10).

f. Remove antenna whip.

9-312. Cleaning - Aft Mission Antenna Mount. Refer to paragraph 9-293.

9-313. Inspection - Aft Mission Antenna Mount. Refer to paragraph 9-294.

9-314. Repair or Replacement of Components - Aft Mission Antenna Mount (figure 9-16). Replace actuator (26) as an assembly if damage is found or malfunction occurs. (Refer to paragraphs 9-316 and 9-321.)

CAUTION

Antenna mount assembly alignment procedures are mandatory if the actuator or limit switches are replaced.

9-315. Installation - Aft Mission Antenna Mount. a. Ensure that mating surfaces are clean and install whip antenna (9) onto antenna coupler (10, figure 9-16) using two screws (8).

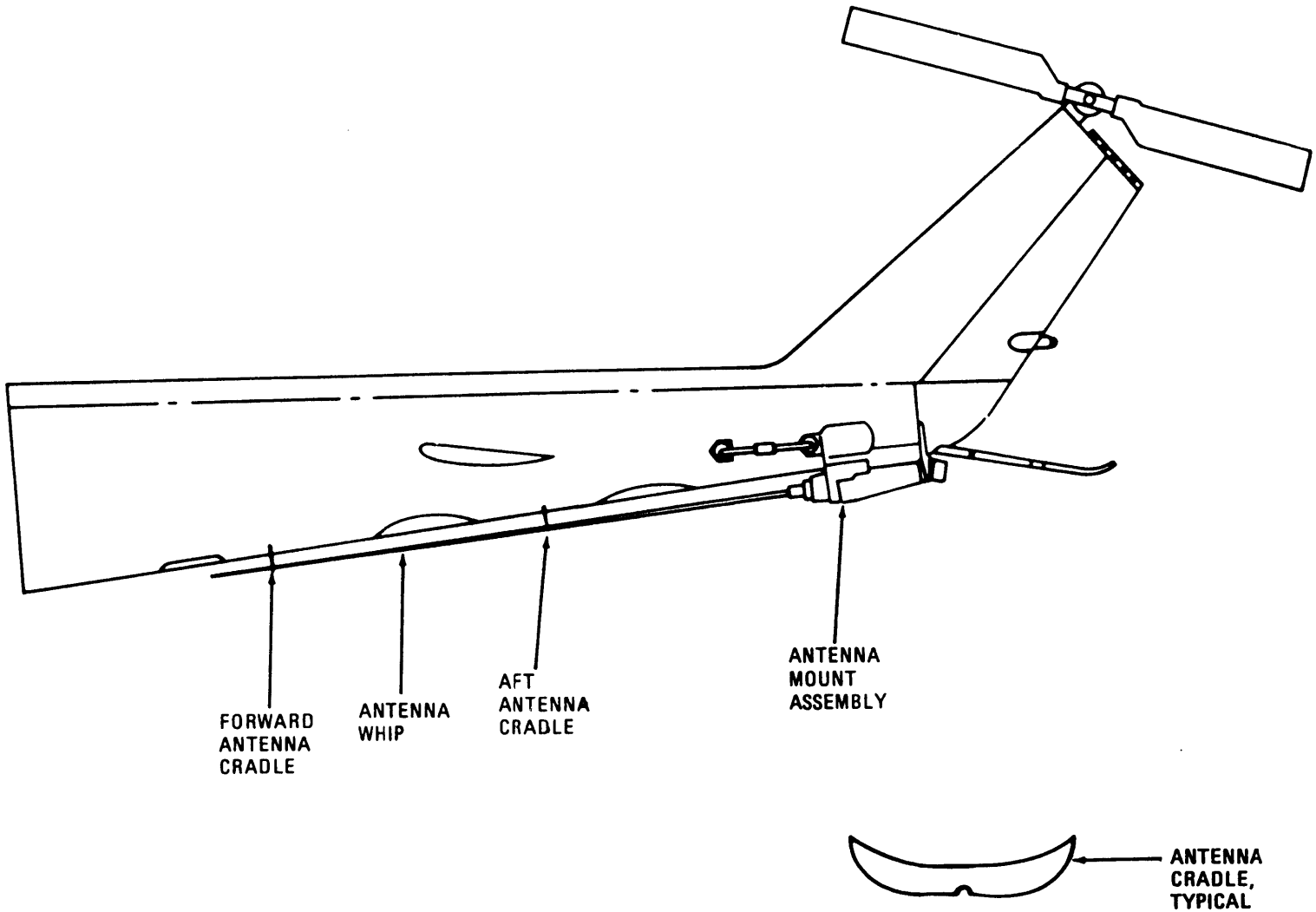

Figure 9-15. Aft Mission Antenna Mount, OE-202/ARQ-33 and OE-330/ALQ-151

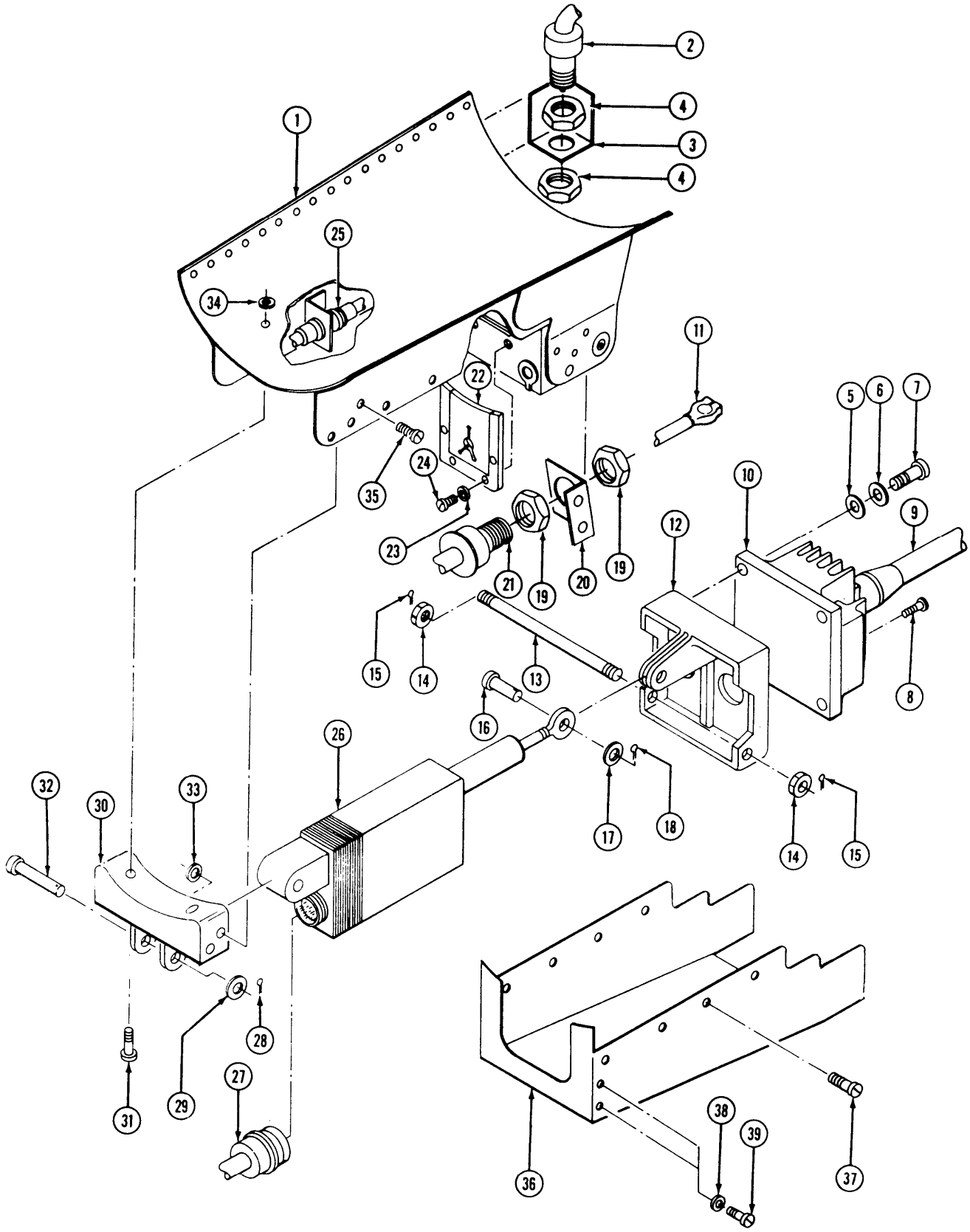

Figure 9-16. Antenna Mount Assembly, OE-202/ARQ-33 and OE-330/ALQ-151 (Sheet 1 of 2)

1. ANTENNA SUPPORT ASSEMBLY
2. EXTEND LIMIT SWITCH 26S1
3. SWITCH BRACKET
4. JAM NUT
5. WASHER
6. LOCK WASHER
7. BOLT
8. SCREW
9. WHIP ANTENNA
10. ANTENNA COUPLER
11. ANTENNA CABLE RF CONNECTOR
12. ANTENNA BASE CLEVIS
13. CLEVIS SHAFT
14. CASTILATED NUT
15. COTTER PIN
16. COUPLING CLEVIS PIN
17. WASHER
18. COTTER PIN
19. JAM NUTS
20. SWITCH BRACKET
21. RETRACT LIMIT SWITCH 26S2
22. SEAL ASSEMBLY
23. WASHER
24. SCREW
25. ELECTRICAL CONNECTOR 26J1
26. ELECTRO-MECHANICAL LINEAR ACTUATOR
27. ACTUATOR ELECTRICAL CONNECTOR
28. COTTER PIN
29. WASHER
30. CLEVIS
31. BOLT
32. CLEVIS PIN
33. NUT
34. NUT
35. BOLT
36. ANTENNA MOUNT COVER
37. SCREW
38. WASHER
39. SCREW

Figure 9-16. Antenna Mount Assembly, OE-202/ARQ-33 and OE-330/ALQ-151 (Sheet 2 of 2)

b. Lockwire the two screws installed in step b.

c. Install antenna mount cover (36) using screws (37 and 39) and washers (38).

9-316. Aft Mission Antenna Mount Linear Actuator (figure 9-16).

9-317. Removal - Aft Mission Antenna Mount Linear Actuator. a. Remove antenna mount cover (36, figure 9-16) and whip antenna (9). (Refer to paragraph 9-311.)

b. Disconnect actuator electrical connector (27).

c. Remove cotter pin (28), washer (29) and clevis pin (31) from the fitting end of the actuator.

d. Remove cotter pin (18), washer (17) and clevis pin (16) from the coupling end of the actuator.

CAUTION

If actuator is to be reinstalled, do not rotate coupling.

e. Slide actuator rearward, ease coupling through seal assembly (22) and remove actuator.

9-318. Cleaning - Aft Antenna Mount Linear Actuator. Refer to paragraph 9-293.

9-319. Inspection - Aft Antenna Mount Linear Actuator. Refer to paragraph 9-294.

9-320. Repair or Replacement - Aft Antenna Mount Linear Actuator. Actuators which fail inspection will be replaced as an assembly.

9-321. Installation - Aft Antenna Mount Linear Actuator. a. Position the actuator (26, figure 9-16) in the mount and slide the coupling end through the seal assembly (22).

b. Align the coupling with the antenna base clevis (12) and install clevis pin (16), washer (17) and cotter pin (18).

c. Align the fitting end of the actuator with the rear clevis (30) and install the clevis pin (32), washer (29) and cotter pin (28).

d. Connect electrical cable (27) to the actuator.

CAUTION

Antenna mount assembly OE-202/ARQ-33 alignment procedures are mandatory if the actuator or limit switches are replaced.

9-322. Aft Mission Antenna Mount Alignment Procedures.

9-323. Actuator Pre-Installation Procedures (figure 9-12). a. Remove actuator from antenna mount assembly. (Refer to paragraph 9-317.)

b. Connect +28 Vdc line to pin C and common to pin E of the actuator.

c. Apply power and allow the actuator to fully retract.

d. Measure dimension A of figure 9-12 and adjust the actuator coupling as required in 180° increments to obtain 11 ± 1/16 inches.

e. Disconnect the +28 Vdc line from pin C and connect it to pin B.

f. Apply power and allow the actuator to extend fully.

g. Measure dimension A of figure 9-12. Measurement shall be 16 ± 1/16 inches. Reject actuator if this measurement is out of tolerance.

h. Disconnect +28 Vdc line from pin B of the actuator and connect it to pin C.

i. Apply power and allow the actuator to retract until dimension A measures approximately 14 inches.

j. Remove power. Disconnect test leads from the actuator.

k. Install actuator in the mount. (Refer to paragraph 9-321.)

9-324. Retract Limit Switch (26S1) Adjustment (figure 9-16). a. Install whip antenna (9). (Refer to paragraph 9-315.a.) Do not lockwire the screws.

NOTE

The antenna can be installed only when the actuator is in an intermediate position. (Refer to paragraph 9-322.i.) if the tip of the antenna contacts the ground, the actuator must be run slightly further toward the retract position.

b. Adjust jam nuts (19) such that retract limit switch (21) protrudes through its mounting bracket (20) approximately its full length.

c. Disconnect mount electrical connector 26P1.

d. Jumper pins H and K of 26J1 (25).

e. Connect a +28 Vdc source line to pin G of 26J1 and common to pin J.

f. Apply power. The actuator will retract until stopped when the clevis makes contact with the retract limit switch plunger.

g. If the antenna whip does not rest in the cradles when retracted, the antenna must be partially extended and the retract limit switch (21) adjusted.

(1) Disconnect the +28 Vdc line from pin G and connect it to pin M.

CAUTION

Ensure that antenna whip does not contact ground or other obstacles while extending.

(2) Momentarily apply power.

h. Adjust jamnuts (19) to move the retract limit switch (21) slightly aft in its mounting bracket (20).

i. Repeat steps e., f., and g. until the antenna comes to rest in the cradles when fully retracted.

j. Attach force gage (L-30M) to the antenna whip immediately aft and adjacent to the aft cradle assembly.

k. Measure the force required to cause movement of the antenna whip from the surface of the cradle. This force must be 2 ± 1/4 pounds.

l. Repeat steps e. through k. until the measured force is in tolerance.

m. Tighten jamnuts (19).

n. Repeat steps e. through k. to ensure tolerance of step k. is maintained.

o. Lockwire jamnuts.

p. Repeat steps e through k. to ensure tolerance is maintained.

q. Remove jumper from pins H and K and test leads from 26J1.

r. Remove power.

9-325. Actuator Coupling Alignment (figure 9-16).

a. Connect a +28 Vdc line to pin K of 26J1 and common to pin J.

b. Apply power. The antenna will retract until stopped by the actuator internal retract limit switch.

CAUTION

The retract limit switch plunger must not be bottomed.

c. Repeat paragraphs 9-324.i. and j. The measured force must now be 3-1/2 ± 1/4 pounds. If the measured force is not in tolerance, the actuator stroke must be adjusted by adjusting the coupling.

d. Measured force greater than 3-3/4 pounds.

(1) Partially extend actuator. (Refer to paragraph 9-324. g.)

(2) Remove coupling clevis pin (16). (Refer to paragraph 9-316.d.)

(3) Rotate the coupling counterclockwise in 180° increments as required to bring the measured force within tolerance.

(4) Reinstall clevis pin (16). (Refer to paragraph 9-321.b.)

(5) Repeat steps b., c., and d. until measured force is within tolerance.

NOTE

To ensure that the coupling remains secure in the actuator shaft, do not lengthen the stroke excessively (counterclockwise rotation). The nylon insert enclosed in the coupling threads must not protrude beyond the end of the actuator shaft threads.

e. Measured force less than 3-1/4 pounds.

(1) Repeat steps d.(1) and (2).

(2) Rotate the coupling clockwise in 180° increments as required to bring the measured force within tolerance.

(3) Reinstall clevis pin (16). (Refer to paragraph 9-321.b.)

(4) Repeat steps b., c., and e. until measured force is within tolerance.

CAUTION

The retract limit switch plunger must not bottom when the antenna is retracted until stopped by the actuator intenal limit switch. If the plunger bottoms, repeat alignment procedure adjustments until the plunger no longer bottoms.

f. Disconnect test leads from 26J1 and remove power.

9-326. Extend Limit Switch (26S2) Alignment (figure 9-17). a. Partially extend the actuator. (Refer to paragraph 9-324.g.)

b. Disconnect antenna RF cable (11, figure 9-16).

c. Remove four bolts and washers (5, 6 and 7) and remove the antenna and antenna coupler (10) from the antenna base clevis (12) as an assembly.

d. Adjust jamnuts (4) such that the extend limit switch (2) protrudes through mounting bracket (3) its full length.

e. Place propeller protractor 36D2844 along the centerline on the underside of the tail boom immediately forward of the antenna mount assembly.

f. Measure and record angle A (figure 9-17).

g. Jumper pins D and M, connect +28 Vdc to line to pin C and common to pin J of mount electrical connector 26J1.

h. Apply power. The actuator will extend until stopped when the clevis makes contact with the extend limit switch plunger.

i. Place the protractor along the centerline on the face of the antenna base clevis (12). Measure and record angle B.

NOTE

Angles A and B are positive angles between 0° and 90°.

j. Angle B should measure 15° minus angle A within a tolerance of ± 2°. B = 15°- A (± 2°).

k. If angle B is not within tolerance specified in step j., the actuator must be partially retracted and the extend limit switch (2) adjusted.

(1) Disconnect the +28 VDC line from pin C and connect it to pin K.

(2) Momentarily apply power.

(3) Adjust jamnuts (4) to move the extend limit switch (2) to a position which will bring angle B within tolerance specified in step j.

l. Tighten the jamnuts (4).

m. Repeat steps g. through k. to ensure no change in tolerance.

n. Lockwire jamnuts.

o. Repeat steps g. through k. to ensure no change in tolerance.

p. Remove jumper and test leads from 26J1. Remove power.

9-327. Final Alignment Check (figure 9-16). a. Connect a +28 Vdc line to pin M and common to pin J of electrical connector 26J1 (25).

b. Apply power. The actuator will extend until stopped by the actuator internal extend limit switch.

c. Check the 1/4 inch overtravel of the extend limit switch plunger. If the plunger is bottomed the entire alignment procedure must be repeated.

d. Partially retract the actuator.

(1) Disconnect the test lead from pin M and connect it to pin K.

(2) Momentarily apply power.

e. Remove test leads and remove power.

f. Reinstall antenna and antenna coupler assembly using four bolts (7) with washers (5) and lockwashers (6).

g. Connect antenna RF cable to antenna coupler.

h. Connect electrical connector 26J1.

i. Install antenna mount cover (36) using screws (37 and 39) and washers (38).

9-328. Functional Test — Mission Antenna Extend — Retract — Actuators. a. The mission antenna actuators are powered by 28 volt DC from the essential bus.

CAUTION

Mission antenna damage could result if the FWD or AFT MISSION ANTENNAS switch is momentarily activated in the EXTEND position while the helicopter is on the ground.

b. Pull the FWD and AFT RETR ANT CONT and the RADAR ALTM circuit breakers prior to applying power to the aircraft.

c. Remove the two antennas from the antenna base mounting assemblies. (Refer to paragraphs 9-292 and 9-311.)

d. Apply external power to the helicopter.

e. Close the FWD and AFT RETR ANT CONT circuit breakers.

f. Momentarily actuate the FWD MISSION ANTENNAS EXTEND-RETRACT switch to the EXTEND position. The forward antenna actuator should move to the extend position in 15 ± 3 seconds.

g. Momentarily actuate the FWD MISSION ANTENNAS EXTEND-RETRACT switch to the RETRACT position. The forward antenna actuator should retract within 15 ± 3 seconds.

h. Repeat steps r. and g. for the aft antenna.

i. Momentarily actuate both the FWD and AFT MISSION ANTENNAS switches to the EXTEND position. Both antenna actuators should extend in 15 ± 3 seconds.

j. Press the mission antenna emergency retract switch on the pilot's cyclic stick. Both antenna actuators should retract in 15 ± 3 seconds.

k. Repeat step i.

l. Press the mission antenna emergency retract switch on the copilot's stick. Both antenna actuators should retract in 15 ± 3 seconds.

m. Pull the FWD and AFT RETR ANT CONT and RADAR ALTM circuit breakers.

n. Remove external power.

o. Install mission antennas and antenna mount covers. (Refer to paragraphs 9-296 and 9-315.)

9-329. Functional Check — Mission Antenna Extend Retract Actuator.

a. Cut lockwire and remove two screws (8, Figure 9-16) holding whip antenna (9) to antenna coupler (10).

b. Remove whip antenna.

c. Apply external power to the helicopter.

d. Close the TLQ-17A ANT CONT circuit breaker.

e. Set Radar Altimeter APN-209 Low altitude warning to zero feet.

f. Momentarily actuate ECM antenna switch to the extend position. Antenna actuator should extend in 15 ± 3 seconds.

g. Set Radar Altm low altitude warning above zero feet. ECM antenna segment on master caution panel should light and actuator will automatically return to the fully retracted position. Actuator should retract in 15 ± 3 seconds.

h. Repeat steps e and f.

i. Press the mission antenna retract switch on the instrument panel. Actuator should retract.

j. Remove external power.

k. Reinstall antenna whip. (Refer to paragraph 9-315.)

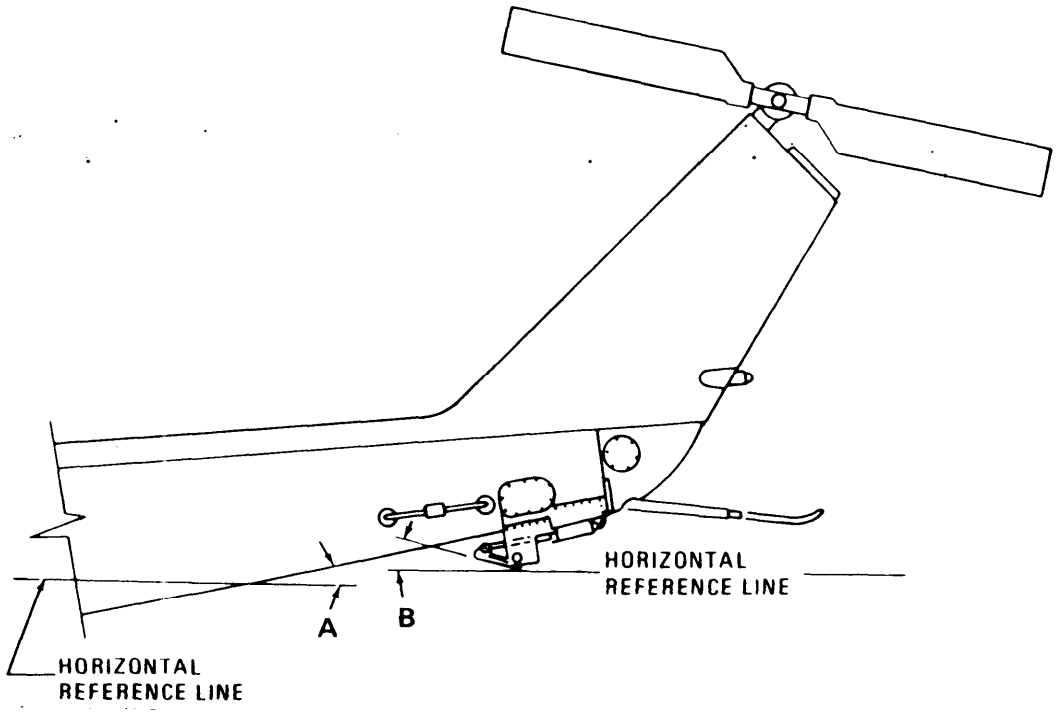

Figure 9-17. Extend Limit Switch Alignment

CHAPTER 10

FUEL SYSTEM

SECTION 1. FUEL CELLS

10-1. FUEL CELLS — CRASHWORTHY (AVIM)

10-2. Description — Fuel Cells — Crash worthy. The crashworthy fuel system incorporates five crashworthy fuel cell assemblies. The crashworthy fuel cells are self-sealing to both .30 and .60 caliber projectiles in bottom 2/3 of the cells. Fittings on fuel cells are self-sealing breakaway type at fuel and vent line locations (figure 10-1).

10-3. Fuel Cells — Crashworthy. Helicopters with MWO 55-1520-210-30-43 incorporate roll-over vent valves installed in the overboard vents of all three aft fuel cells (figure 10-3) to provide fire hazard protection from fuel spillage in the event of a helicopter rollover during a crash.

10-4. Removal — Fuel Cells — Crashworthy.

a. Forward Fuel Cell.

CAUTION

When a cell which has contained fuel is to remain empty of fuel for more than 10 days, inner liner should be fogged with light lubricating oil (C167) to prevent deterioration from drying-out and cracking or checking.

NOTE

Removal procedures given are for the left side cell, procedures for the right side cell are identical unless noted.

(1) Defuel system (paragraph 1-3).

(2) Remove access panel over fuel cell.

(3) Remove sump assembly (paragraph 10-137).

(4) Remove four bolts (17, figure 10-1) and washers from fuel cell fitting (13).

(5) From inboard side of bulkhead, remove nut (12) and washer (11) from vent valve (8).

(6) From inboard side of bulkhead, remove bolt (1) and washer (2). For right side cell remove bolt (80) and washer (81)

(7) Remove screws (3) and remove access cover (4) and preformed packing (5) from fuel cell.

(8) From inside fuel cell, remove bolt securing hose clamp to bulkhead. (Left side cell only).

(9) For right side cell, remove two bolts (75), washers (76) and spacers (79). Remove aft fuel quantity transmitter (77).

(10) For right side cell, remove bolts (85), washers (84) and spacers (82). Remove forward fuel quantity transmitter (86).

(11) Working through access port, remove two bolts (18), washers (19) and nuts (32), attaching ejector pump (20) to support (23). Allow ejector pump and attached hoses to lay in fuel cell.

(12) Remove two bolts (21) and washers (22) securing support (23) to fuel cell, remove support.

(13) Remove nut (31) from hose assembly (24).

(14) From forward end (outside cell) remove clamp (26), washer (27) and seal (28). Remove preformed packing (25) from hose assembly (24).

(16) On aft end of cell (outside), remove bolts (36), washers (35) and retainers (34) securing outlet fitting (37) to fuel cell. Remove preformed packing (38) from fuel cell (33).

(16) Remove fuel cell from helicopter.

b. Aft Outboard Fuel Cell.

NOTE

Removal procedures given are for left side cell; procedures are identical for right side cell unless noted. If right side cell is to be removed, engine oil tank must be removed (paragraph 4-84).

NOTE

If right cell is to be removed, remove cap and adapter or dosed circuit refueling receiver in accordance with paragraph 10-80. If left side cell is to be removed, fuel filter assembly must be removed (paragraph 10-22).

NOTE

Removal of aircraft center fuel cell requires removal of center aft cell bulkhead access door.

(1) Defuel system (paragraph 1-3).

(2) Remove left or right side fuel cell access er on engine work deck.

(3) If bracket is installed, remove screws (49 figure 10-1) and washers (50).

(4) Disconnect hose assembly (58) from elbow (51).

(5) Remove center fuel cell cover plate (4, figure 10-3).

(6) Working through center fuel cell opening, remove bolts and.washers securing cell interconnect.

(7) Remove bolts (47 and 43), washers (46 and 47) to disconnect hoses, and remove packings (45).

(8) Unscrew breakaway valve (42) from fitting (48). Remove packing (41) from breakaway valve (42).

(9) Remove fuel cell. Cap all open lines and fittings.

Aft Center Fuel Cell.

CAUTION

Do not allow fuel cell to remain folded for more than 30 minutes. Keep fuel cell at room temperature and normal humidity.

CAUTION

Exercise extreme caution during removal/installation of vent bracket. Damage to bracket will occur from lower jaw of cresent or open end wrench, if wrench is not applied to ftting at a 90° angle. Do not exert undue pressure on any part of assembly.

(1) Defuel system (paragraph 1-3).

(2) Remove engine work deck access plate over center fuel cell.

(3) Remove center fuel cell cover plate (4, figure 10-3)

(4) Remove bolts and washers at left and right side cell interconnects.

(5) Remove bolts (61, figure 10-1) and washers (62) securing bracket (63) to structure.

(6) Remove bolts (74) and washers (73) securing bracket to fittings (66).

(7) Disconnect hose assemblies (64), (71) and (69).

(8) Unscrew breakaway valve (42) from fitting (48). Remove packing (41) from breakaway valve (42).

(9) Collapse cell and fold. Remove through aft center cover plate opening. Cap all open lines and fittings.

10-5. Inspection-Fuel Cells-Crashworthy. a. Remove exterior surface dirt and grime by scrubbing the fuel cell with warm, soapy water using soap paste (C 253). Air dry surface.

b. Purge fuel cell thoroughly with fresh air; scrub with warm, soapy water; and rinse in clean, clear water. Air dry.

c. Inspect all interior and exterior surfaces for loose seams, cuts, abrasions, scuffed surfaces, tears, blisters, and for any area that appears to have become soaked with fuel.

d. Inspect metal fittings to make certain protective finishes are intact and the coil-type inserts are installed and in good condition.

e. The following damages are prohibited for field repair and can be repaired only by depot:

(1) Pass-through holes (holes made by a projectile that enters through one surface of the fuel cell and exits through the opposite surface).

(2) Damage that extends into a corner or stepped-off area, or that involves a cut longer than 4.0 inches, or that is caused by the seepage or diffusion of fuel between the fabric plies.

10-6. Repair or Replacement — Fuel Cells — Crashworthy.

NOTE

Fuel cells requiring fabric repair shall be forwarded to depot.

a. Replacing Fitting Inserts. Standard maintenance procedures are adequate to replace the coil-type inserts in each fuel cell fitting.

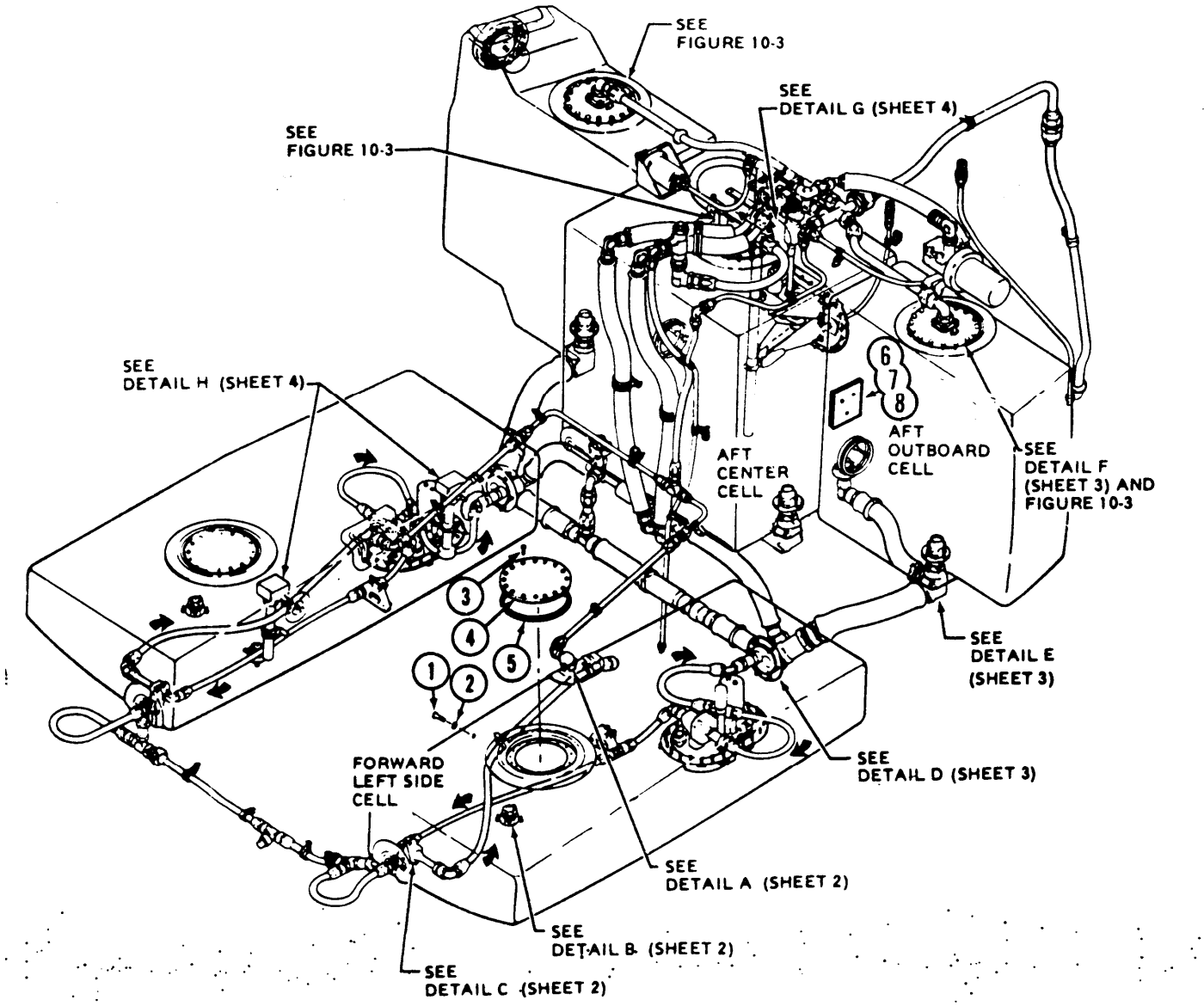

1. Bolt
2. Washer
3. Screw
4. Access Cover
5. Preformed Packing
6. Bolt
7. Washer
8. Packing

Figure 10-1. Fuel Cell Installation — Crashworthy (Sheet 1 of 4)

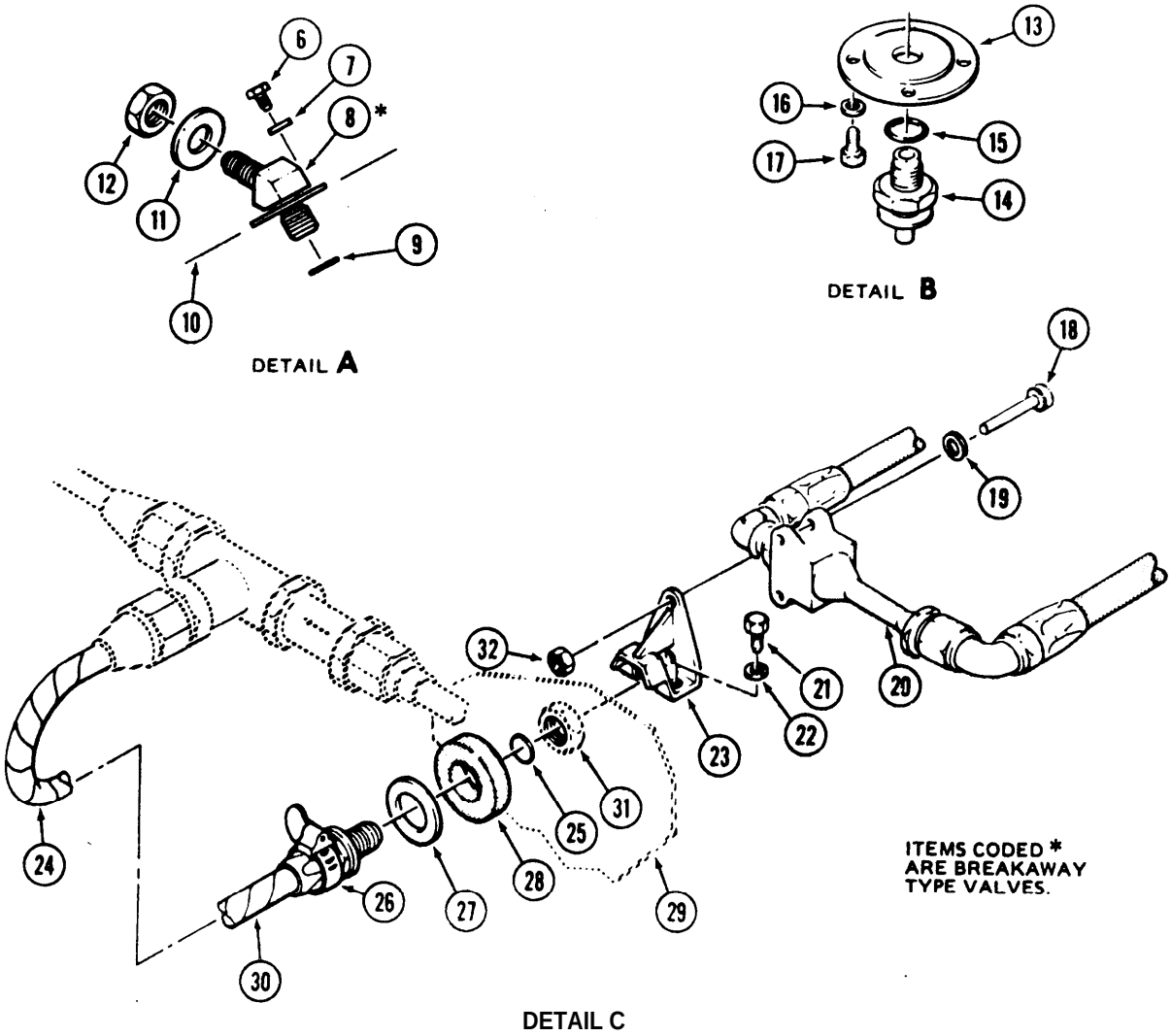

6. Bolt
7. Washer
* 8 Vent valve
9. Preformed packing
10. Airframe bulkhead
11. Washer
12. Nut
13. Fuel cell fitting
14. Drain valve
15. Preformed packing
16. Washer
17. Bolt
18. Bolt
19. Washer
20. Ejector pump
21. Bolt
22. Washer
23. Support
24. Hose assembly
25. Preformed packing
26. Clamp
27. Washer
28. Seal
29. Airframe bulkhead
30. Nylon sleeve
31. Nut
32. Nut

Figure 10-1. Fuel Cell Installation — Crashworthy (Sheet 2 of 4)

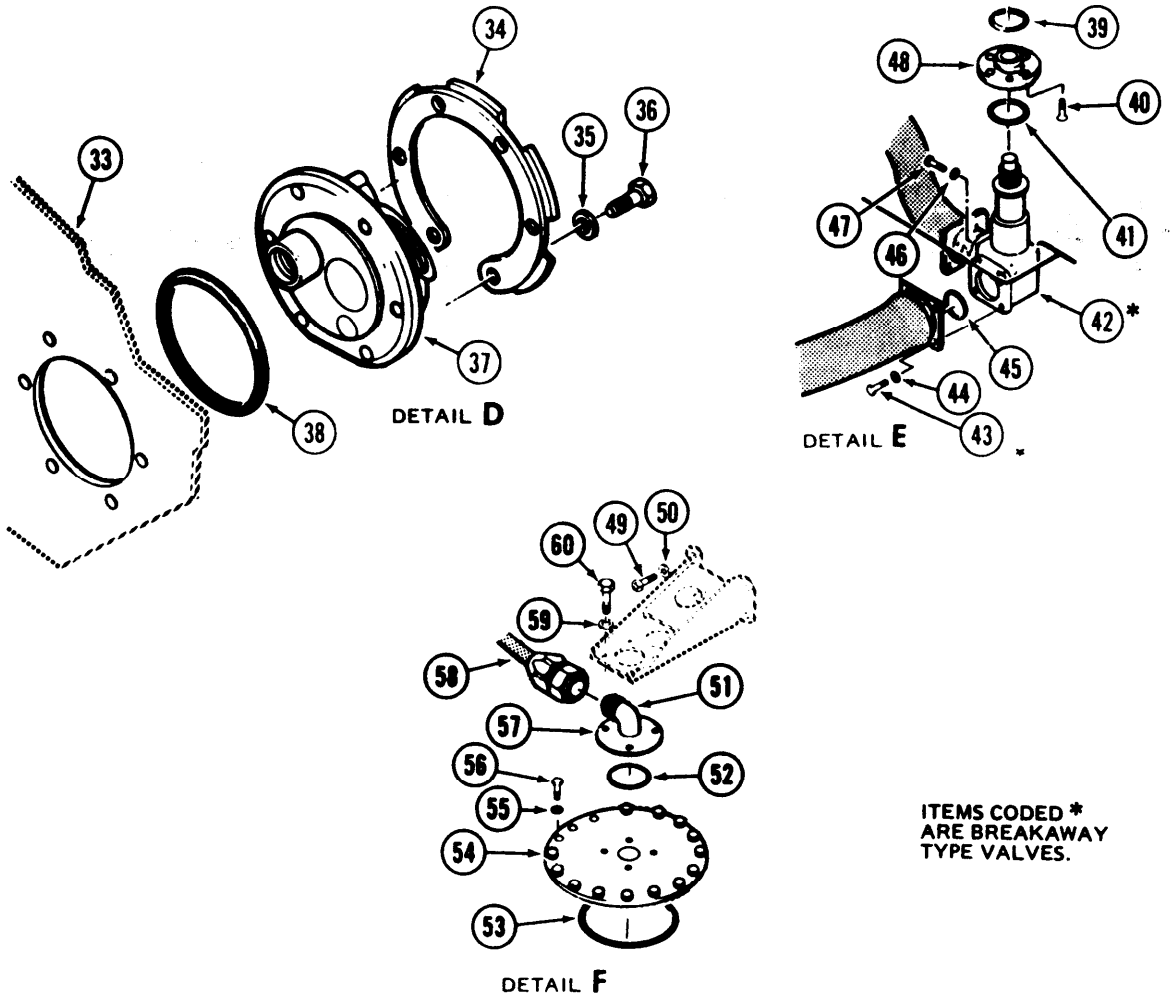

33. Fuel cell
34. Retainer
35. Washer
36. Bolt
37. Outlet fitting
38. Preformed packing
39. Preformed packing
40. Screw
41. Preformed packing
*42. Breakaway valve
43. Bolt
44. Washer
45. Preformed packing
46. Washer
47. Bolt
48. Fitting
49. Screw
50. Washer
51. Elbow
52. Preformed packing
53. Preformed packing
54. Cover plate
55. Washer
56. Screw
67. Fitting
58. Hose assembly
59. Washer
60. Bolt

Figure 10-1. Fuel Cell Installation — Crashworthy (Sheet 3 of 4)

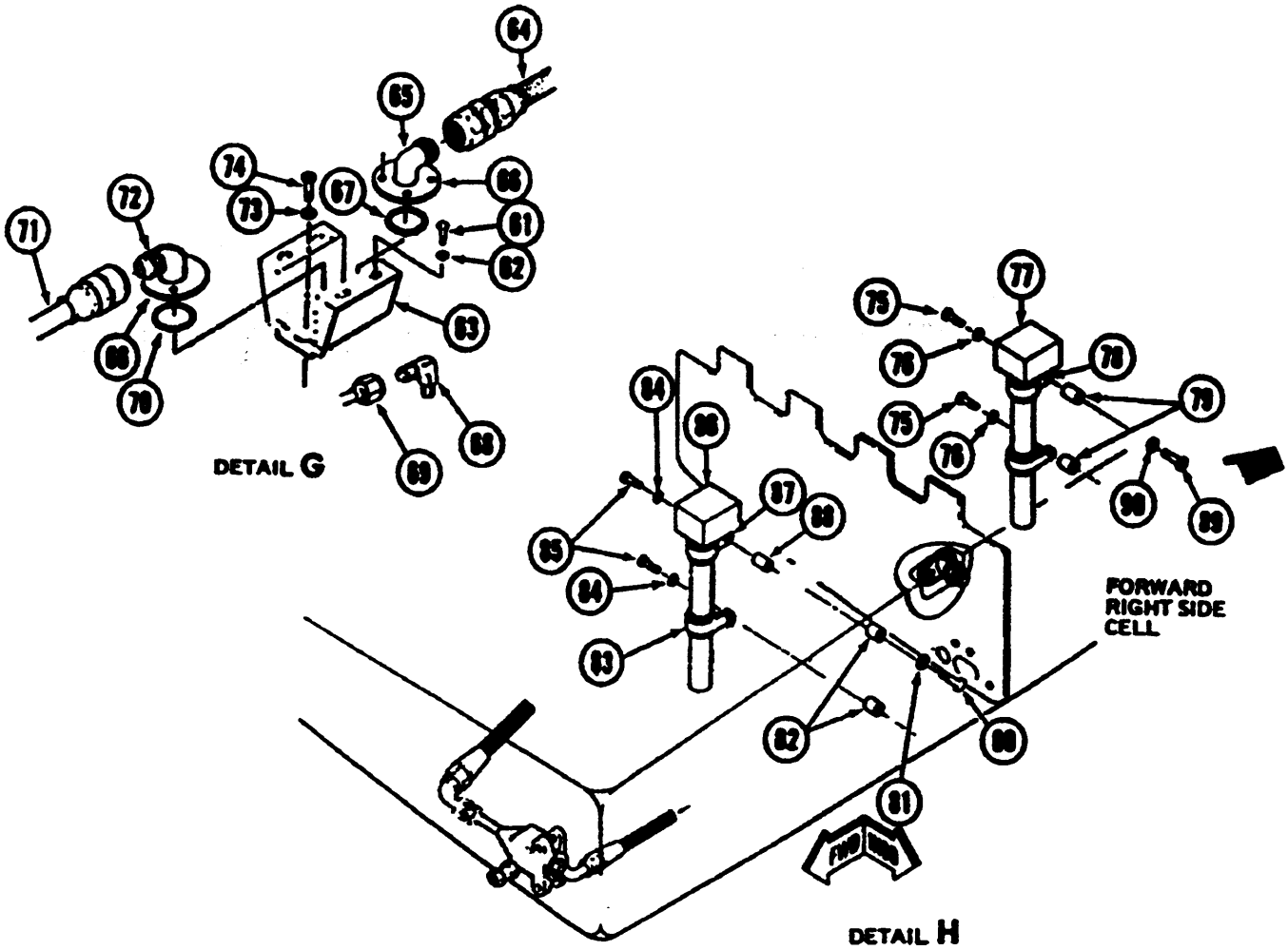

61. Bolt
62. Washer
63. Bracket
64. Hose assembly
65. Elbow
66. Fitting
67. Preformed packing
68. Elbow
69. Hose assembly
70. Preformed packing
71. Hose assembly
72. Elbow
73. Washer
74. Bolt
75. Bolt
76. Washer
77. Fuel quantity transmitter
78. Clamp
79. Spacer
80. Bolt
81. Washer
82. Spacer
83. Clamp
84. Washer
85. Bolt
86. Fuel quantity transmitter
87. Clamp
88. Spacer
89. Bolt
90. Washer

Figure 10-1. Fuel Cell Installation - Crashworthy (Sheet 4 of 4)

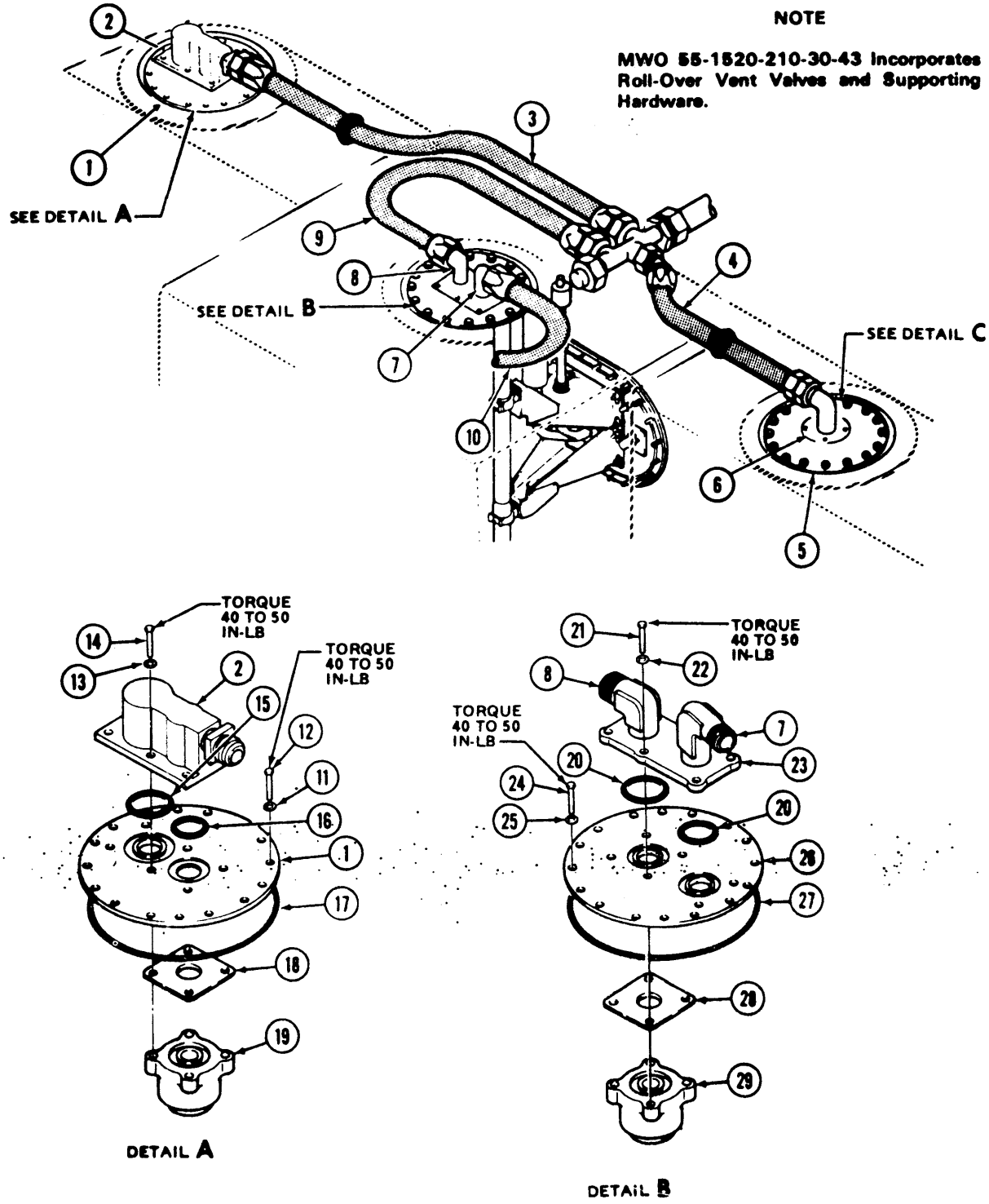

Figure 10-2. Rollover Protection Vent Valves — Aft Fuel Cells (Sheet 1 of 2)

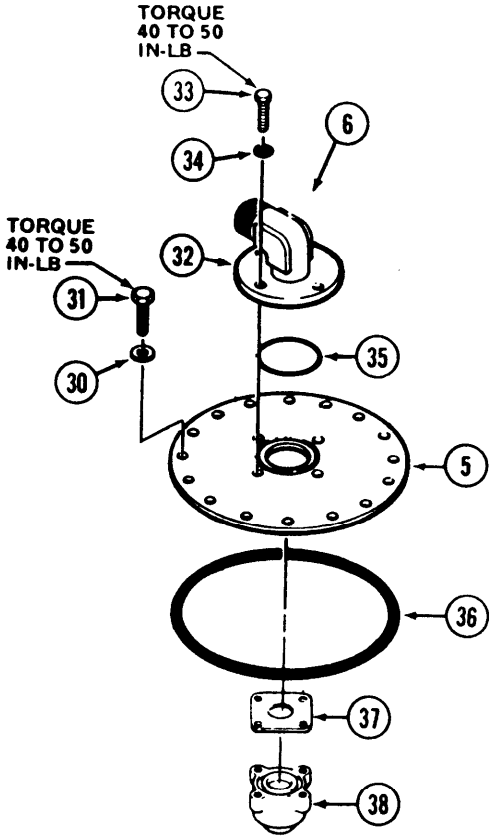

NOTE

MWO 55-1520-210-30-43 Incorporates Roll-Over Vent Valves and Supporting Hardware.

DETAIL C

1. Cover
2. Manifold
3. Hose
4. Hose
5. Cover
6. Elbow
7. Elbow
8. Elbow
9. Hose
10. Hose
11. Washer
12. Bolt
13. Washer
14. Bolt
15. Packing
16. Packing
17. Packing
18. Gasket
19. Vent Valve
20. Packing
21. Bolt
22. Washer
23. Flange
24. Bolt
25. Washer
26. Cover
27. Packing
28. Gasket
29. Vent Valve
30. Washer
31. Bolt
32. Plate
33. Bolt
34. Washer
35. Packing
36. Packing
37. Gasket
38. Vent Valve

Figure 10-2. Rollover Protection Vent Valves — Aft Fuel Cells (Sheet 2 of 2)

b. Restoring Protective Fitting Finishes.

(1) Using a fine-toothed file or fine emery paper, carefully remove any roughness from the fitting to be refinished.

WARNING

Cleaning materials are flammable and toxic. Avoid skin contact and breathing of solvent vapors.

(2) Clean metal surfaces of fitting using pads dampened with methyl-ethyl-ketone (C177).

(3) Obtain a small container of alodine 1200 (C62) solution from stock.

WARNING

In the following steps, do not allow the alodine 1200 (C62) solution to come into contact with the hands, body, or clothing. The solution is corrosive and can injure personnel who are working with it.

(4) Moisten fitting surface with clean pad dampened in water.

(5) Using a narrow nylon brush, apply an undiluted, unadulterated coat of alodine 1200 solution (C62) to the moistened area.

(6) Allow solution to dry until a light, golden coating appears on the fitting. When coating has formed, remove excess solution by wiping the surface with clean pads dampened in water. Dry the restored area with dry pads.

10-7. Installation — Fuel Cells — Crashworthy.
a. Forward Fuel Cell.

(1) Vacuum or remove any foreign material from fuel cell opening.

(2) Place fuel cell in opening.

(3) Position vent valve (8, figure 10-1) through bulkhead opening. Install washer (11) and nut (12) to vent valve.

(4) Install two bolts (17) and washers (16) at cell drain valve location. For cell drain valve installation, refer to paragraphs 10-27 thru 10-32a.

(5) Install bolts (1) and washer (2) from inboard side of bulkhead. For left side cell install bolt (80) and washer (81).

(6) Install bolt and washer through hose clamp (inside fuel cell) to bulkhead. (Left side cell only).

(7) For right side cell install aft fuel quantity transmitter (77), using two bolts (75) washers and spacers (79) (figure 10-1, detail H).

(8) For right side cell install forward fuel quantity transmitter (86) using bolts (85), washers (84), spacers (82 and 88) and clamps (83 and 87).

(9) From forward end of cell install hose assembly with packing (25), seal (28), washer (27) and clamp (26). Install nut (31) from inside cell. Tighten nut (31). Seat seal (28) against bulkhead and tighten clamp (26).

(10) Install support (23) using two washers (22) and two bolts (21).

(11) Attach ejector pump (20) to support (23) using washers (19) and bolts (18).

(12) Install aft outlet fitting (37) to fuel cell with packing (38). Install retainers (34), washers (35) and bolts (36).

(13). Install sump assembly (paragraph 10-144).

(14) Deleted.

(15) Install access cover (4) with preformed packing (5) and screws (3).

(16) Install access panel over cell (paragraph 2-33).

(17) Pressure test cell for leaks (paragraph 10-19).

NOTE

Installation procedures are identical for left and right cells except that after installation of the right fuel cell the oil tank (paragraph 4-90) and the closed circuit refueling equipment (paragraph 10-92) must be installed. After installation of the left fuel cell the fuel filter assembly must be installed (paragraph 10-26).

b. Aft Outboard Fuel Cell.

(1) Vacuum or remove any foreign material from fuel cell opening.

(2) Position fuel cell in airframe.

(3) Install packing (39, figure 10-1) to breakaway valve (42). Install valve to fitting of fuel cell (33).

(4) Install packing and bolts at center fuel cell interconnect fitting.

(5) Install bracket (if used) using screws (49) and washers (50).

(6) Connect hose assembly (58) to elbow (51).

(7) Install fuel cell access cover (engine deck), (paragraph 2-19).

(8) Pressure test fuel cell (paragraph 10-19).

c. Aft Center Fuel Cell.

CAUTION

Do not allow fuel cell to remain folded for more than 30 minutes. Keep fuel cell at room temperature and normal humidity.

(1) Vacuum or remove any foreign material from fuel cell opening.

(2) Fold and tie fuel cell and install through aft access port.

(3) Install packing and bolts at each interconnect location to aft outboard cells.

(4) Install aft center access cover.

(5) Connect hose assemblies (71, figure 10-1) and (64) to elbows (65 and 72).

(6) Connect tube assembly (69) to elbow (68).

(7) Install bracket (63) using bolts (74) and washers (73).

(8) install bolts (61) and washers (62) through bulkhead and bracket.

(9) Install access cover plate (engine deck).

(10) Presssure test fuel cell (paragraph 10-19).

SECTION II. FUEL SYSTEMS

10-8. FUEL SYSTEM.

10-10. General Maintenance — Fuel System. a. Aviation unit maintenance will consist of visual inspections, ground operational checks, cleaning of filter and strainers, specified adjustment of control linkage system, and replacements of piping, fittings, and seals. Observe general notes and precautions below, and procedures for replacement or adjustment of principal components in subsequent paragraphs. Fuel lines and components on the engine constitute the fuel control system and will be found in TM 55-2840-229-23 fuel system schematic (figure 10-4).

b. Intermediate maintenance will include more, detailed procedures as indicated by (AVIM) throughout the chapters.

c. Before removing any line or hose, be sure it is properly identified and its route understood for replacement in same manner.

CAUTION

Do not use masking tape to seal openings.

d. Cap or cover any open lines, fittings, or exposed opening in units (other than normal vents and drains) to protect fuel system from contamination. Be sure vent lines are not obstructed.

e. For electrical circuits of boost pump, shutoff valve, fuel quantity gage system, pressure transmitter, pressure or flow switches, and float switches, see applicable wiring diagrams (Appendix F).

f. Conduct any defueling or drainage of fuel in accordance with applicable directives, and with extreme care to avoid fire hazards.

10-11. HOSES — FUEL SYSTEM.

10-12. Description — Hoses — Fuel System. Flexible hoses are used in the fuel system to permit easier maintenance. The crashworthy system uses self-sealing flexible hoses to prevent fuel spillage in event of a crash.

10-13. Removal — Hoses — Fuel System. a. Defuel fuel cell.

b. Loosen end fittings of hose.

c. Remove any clamp and remove hose.

d. Cap fittings to avoid foreign material entry into fuel system.

10-14. Inspection — Hoses — Fuel System. a. Inspect hoses for damage and evidence of leakage (TM 55-1500-204-25/1).

b. Inspect hoses for evidence of chafing.

c. Inspect hose fittings for corrosion.

10-15. Repair or Replacement — Hoses — Fuel Systems. Replace hoses with damage, evidence of leakage, or corroded fittings.

10-16. Installation — Hoses — Fuel System. a. Attach hose end fittings.

b. Secure only clamps previously removed.

c. Service fuel system and check for leaks.

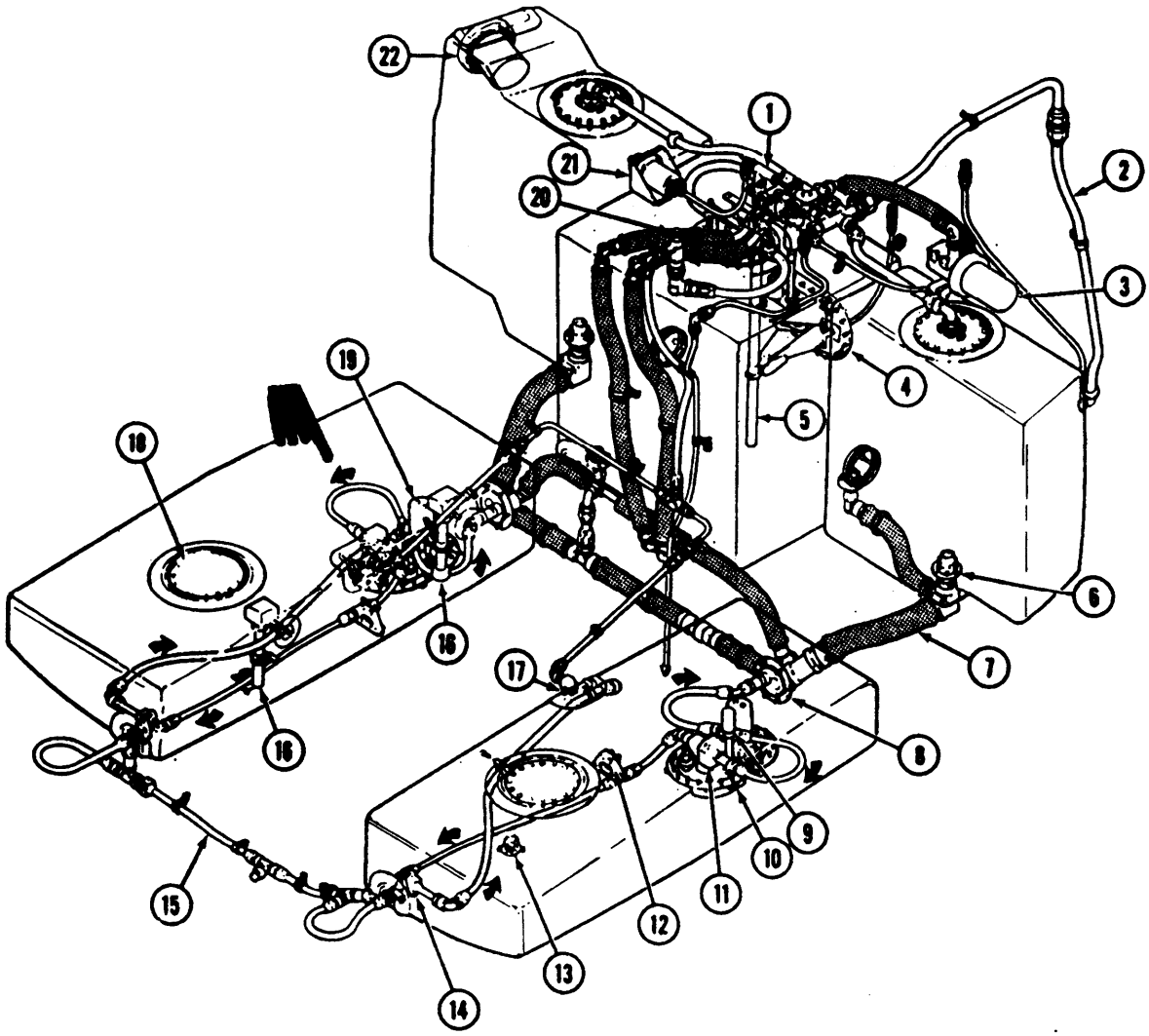

1. Fuel shutoff valve and check valve manifold
2. Vent line
3. Fuel filter
4. Cover plate — aft center fuel cell
5. Fuel quantity transmitter
6. Breakaway valve
7. Crossover hose
8. Outlet fitting
9. Low level float switch
10. Sump assembly
11. Flow switch
12. Flapper valve
13. Cell drain valve
14. Ejector pump
15. Crossfeed line
16. Fuel quantity transmitters
17. Vent valve
18. Fuel cell access
19. Electric boost pump
20. Siphon breaker valve
21. Fuel pressure transmitter
22. Closed circuit refueling receiver

Figure 10-3. Fuel Supply System - Crashworthy

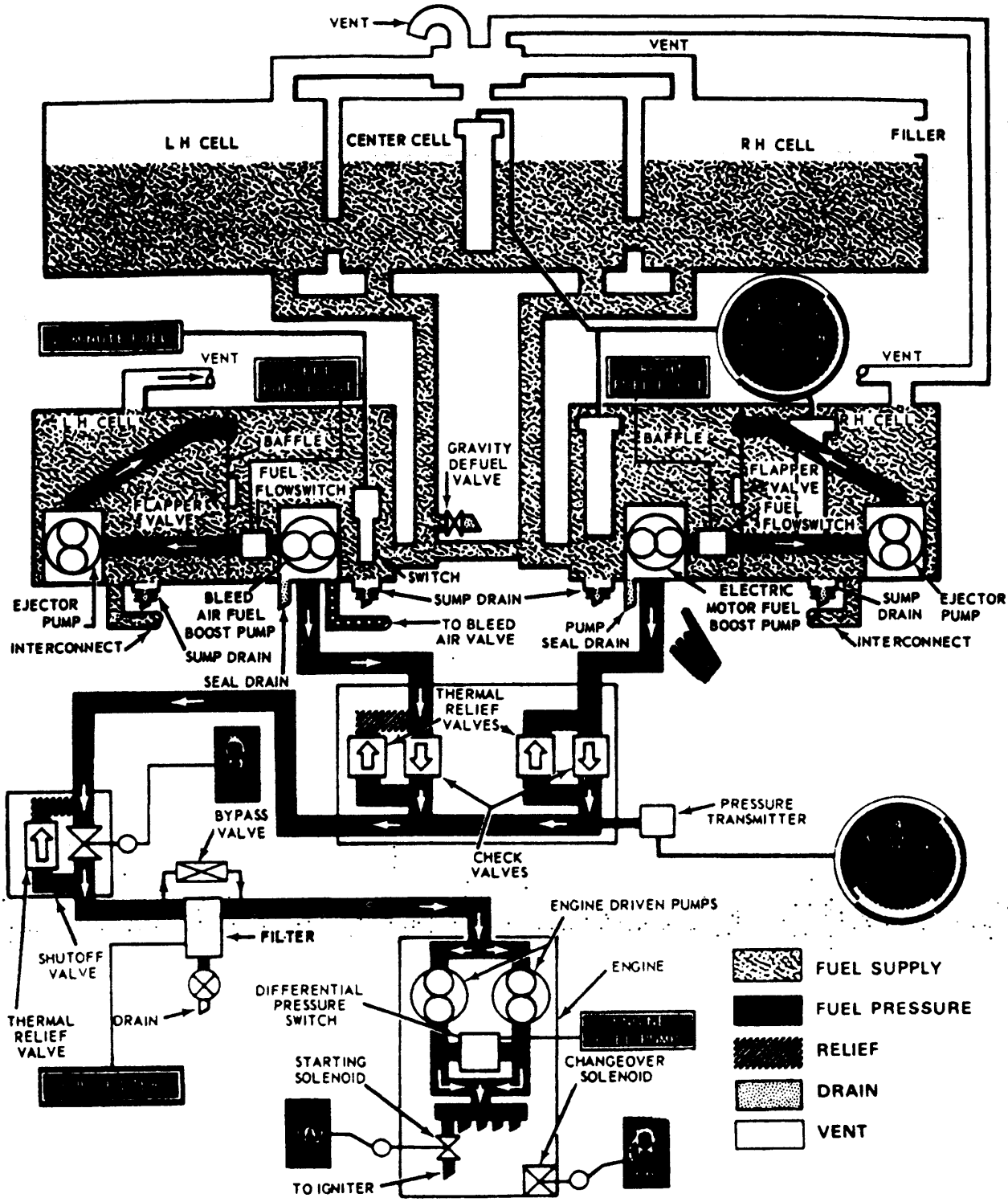

Figure 10-4. Fuel System Schematic

10-17. Troubleshooting — Fuel System.

NOTE

Before using this table, be sure to perform all normal operational checks. If a malfunction which is not listed in this table is evident, notify the next higher level of maintenance.

Table 10-2. Troubleshooting — Fuel System

CONDITION

TEST OR INSPECTION

CORRECTIVE ACTION

1. Electrical boost pump warning light illuminated, no pressure indicated on fuel pressure gage.

STEP 1. Ensure electrical boost pump is operative

Replace boost pump if defective (paragraph 10-104).

STEP 2. Check for faulty wiring.

Correct wiring if defective (paragraph 9-5).

2. Electrical boost pump warning light Illuminated, pressure indicated on fuel pressure gage.

STEP 1. Ensure ejector pump is operating correctly.

Replace ejector pump if defective (paragraph 10-118).

STEP 2. Check for foreign material in ejector pump and/or hoses.

Clean foreign material from ejector pump and/or hoses (Paragraph 10-119).

STEP 3. Check for defective check valve.

Replace check valve if defective (paragraph 10-153).

STEP 4. Check for defective flow switch.

Replace flow switch if defective (paragraph 10-148).

STEP 5. Check for grounded wire to warning light. Correct wiring if faulty.

STEP 6. Deleted.

3. Bleed air boost pump warning light illuminated, fuel pressure low or zero.

STEP 1. Check for inoperative bleed air fuel boost pump.

Replace boost pump if defective (paragraph 10-104).

Table 10-2. Troubleshooting - Fuel System (Cont)

CONDITION
TEST OR INSPECTION
CORRECTIVE ACTION

4. Bleed air boost pump warning light illuminated, pressure normal on fuel pressure gage.

STEP 1. Check for defective ejector pump.

Replace ejector pump If defective (paragraph 10-118).

STEP 2. Check for foreign material in ejector pump and/or hoses.

Clean foreign material from ejector pump and/or hoses (paragraph 10-119).

STEP 3. Check for defective check valve.

Replace check valve if defective (paragraph 10-153).

STEP 4. Check for defective flow switch.

Replace flow switch i defective (paragraph 10-148).

STEP 5. Check for grounded wire to warning light.

Correct wiring If faulty (paragraph 9-6).

5. Engine fuel pump warning light illuminated.

STEP 1. Check for faulty fuel pressure switch.

Replace defective pressure switch (paragraph 4-147).

STEP 2. Check for faulty engine driven fuel pump (two).

Replace engine driven fuel pump if defective (TM 55-2840-229-23).

STEP 3. Check for grounded wire to warning light.

Correct wiring If faulty (paragraph 9-5).

6. Fuel filter warning light illuminated.

STEP 1. Check for dirty fuel filter.

Replace filter. If frequent filter changes are required, Investigate fuel source (paragraph 10-25).

STEP 2. Check for faulty pressure switch.

Replace switch If faulty (paragraph 9-5).

STEP 3. Check for grounded wire to warning light.

Correct wiring If faulty (paragraph 94).

Table 10-2. Troubleshooting - Fuel System (Cont)

CONDITION
TEST OR INSPECTION
CORRECTIVE ACTION

7. Shut-off valve inoperative.

STEP 1. Check for defective valve or lack of electrical power.

Check for electrical power and ground at valve; n power and ground available, valve is defective (paragraph 10-152).

8. 20 MIN FUEL light fails to illuminate.

STEP 1. Check for faulty low level switch, wiring, or lamp.

Replace defective switch, wiring, or lamp (paragraph 9-5).

9. 20 MIN FUEL light illuminates above/or below normal low level fuel quantity.

STEP 1. Check for faulty fuel quantity system.

Adjust, repair fuel quantity system as required (paragraph 8-241).

STEP 2 Check upper crossover for the forward under floor tanks to be open and reasonably unrestricted.

Clear restriction (paragraph 1042b).

STEP 3. Check forward crossover line and ejector pumps to be open and reasonably unrestricted.

Clear restrictions (paragraphs 1042a and 10-119).

STEP 4. Check flapper valves for leakage faster than ejector pumps can pump fuel to rear of cell. (Check flapper valve in left forward cell if system activates with a higher than normal quantity, check flapper valve in right forward cell if warning light activates with lower than normal quantity).

Adjust flapper valves for proper seating, replace or shim as necessary (paragraph 10-127).

10. Fuel pressure fluctuating, low, or zero with boost pump warning light not illuminated.

STEP 1. Check for faulty fuel pressure transmitter or indicator.

Replace defective transmitter or Indicator (paragraph 1037).

STEP 2. Check for faulty wiring.

Replace defective wiring (paragraph 9-5).

11. Fuel leaking out tank vent tube during closed circuit refueling.

STEP 1. Check for deflector on back of closed circuit refueling receiver.

Install deflector if missing.

10-18. Operational Check Fuel System. Test installation for leaks. Request maintenance to perform air pressure-type test or add small, measured amount of fuel and check for leaks. If no leaks are noted, add additional measured amounts of fuel increments. Stop fueling after each increment of fuel is added and check for proper operation of low level fuel warning system, fuel quantity indicating system and boost pumps (paragraph 8-241). It is necessary to check operation of the low fuel level warning system when fuel level is between 130 and 240 lbs.

10-19. Pressure Test Fuel System.

a. Defuel system (paragraph 1-3).

CAUTION

Do not use masking tape to seal openings.

b. Cap main fuel line and vent connections.

c. Use regulated low pressure, filtered compressed air source with a manometer or accurate pressure gage and a shutoff valve.

CAUTION

Do not apply excessive pressure, as severe damage to cell and structure may result.

d. Apply pressure until gage indicates 2.5 psi in cells and crossover tubes. Shutoff air source. Cells should hold this pressure for 15 minutes.

e. Locate and correct any leakage indicated by loss of pressure, and repeat tests until results are satisfactory.

f. Refuel system, if required.

CAUTION

Do not operate electrical equipment while refueling or defueling aircraft

10-19.1. Function Check Low Fuel Caution System.

a. Defuel aircraft (paragraph 1-3).

b. Verify that the fuel quantity indicator is indicating 0 pounds of fuel (if not, refer to paragraph 8-241 for corrective action).

c. Perform operation check (paragraph 10-18) to check when 20 minute fuel light goes out. Light should go out between 130 and 240 lbs of fuel indicated. If fuel quantity indicated is below 130 lbs or above 240 lbs, take corrective action (Table 10-2).

d. Verify illumination of 20 minute fuel light.

(1) Add additional measure amounts of fuel until fuel quantity indicator reads above 240 lbs. Check for illumination of 20 minute fuel light, if light illuminates take corrective action (Table 10-2).

(2) Defuel aircraft at measured amounts of fuel (approximately 5 gallons). Stop defueling after each measured amount and operate electric fuel boost pumps for approximately 5 minutes. Check for illumination of 20 minute fuel light and note fuel quantity indicated. Twenty minute fuel light should stay illuminated after operating electric fuel boost pumps when fuel quantity is between 130 and 240 lbs indicated. If 20 minute fuel light fails to stay illuminated below 130 lbs, take corrective action (Table 10-2).

10-20. FUEL FILTER ASSEMBLY.

10-21. Description Fuel Filter Assembly. The main fuel filter has a micronic type element and electrical means of indicating any impending bypass condition which may occur. Filter is a cylindrical unit, horizontally mounted on forward firewall in left side of engine compartment. Piping connections to filter heads are: an inlet line from shutoff valve of supply system, a drain line with manual valve, and an outlet coupling for engine fuel control hose. If a dogging condition should develop in filter element, a normally-open switch is dosed by differential pressure, lighting FUEL FILTER caution light as warning that further I dogging may cause fuel to flow through by-pass valve without filtration (figure 10-5).

10-22. Removal Fuel Filter Assembly.

a. Open engine cowling at left side.

b. Disconnect fuel hose from outlet coupling (7, figure 10-5) on filter (8). Drain fuel from filter by opening valve (11) located under head (8).

NOTE

Use suitable tool to depress self-closing valve in filter outlet coupling, to admit some air and allow drainage. Close valve (11).

c. Remove filter element (3) for inspection and replacement as follows:

(1) Open coupling (5,figure 10.5).

(2) Remove strainer body (1) with packing (6) and element (3) from head assembly (8).

(3) Separate element (3) and packing (2) and (4) from strainer body.

(4) Filter head (8) will normally remain in place but can be removed when necessary by disconnecting electrical cable plug (9), fuel line (10) and drain line, and removing four bob with washers which secure head to firewall.

10-23. Inspection Fuel Filter Assembly. Inspect filter element (3) for contamination to determine if any corrective action is needed beyond replacement of element and packing.

10-24. Cleaning Fuel Filter Assembly. Clean filter body and head as necessary with cleaning solvent, (C261). Protect electrical connections when cleaning head.

10-25. Repair or Replacement Fuel Filter Assembly.

a. Replace element (3) if unserviceable or damaged.

b. Replace entire filter assembly if corrosion or damage exists.

10-26. Installation Fuel Filter Assembly.

a. If removed, reinstall filter head (8, figure 10-5). Secure to firewall with four bolts and washers. Lockwire bolt heads. Connect fuel line tube to filter inlet hose (10), and drain line to valve (11) at bottom of filter head. Connect electrical cable plug.

b. Install filter element (3) and body (1) as follows:

(1) Place new packing (2, figure 10-5) on boss in bottom of strainer body (1).

(2) Place dean filter element (3) in strainer body (1) seated firmly.

(3) Place new packing (4) around center boss in filter head.

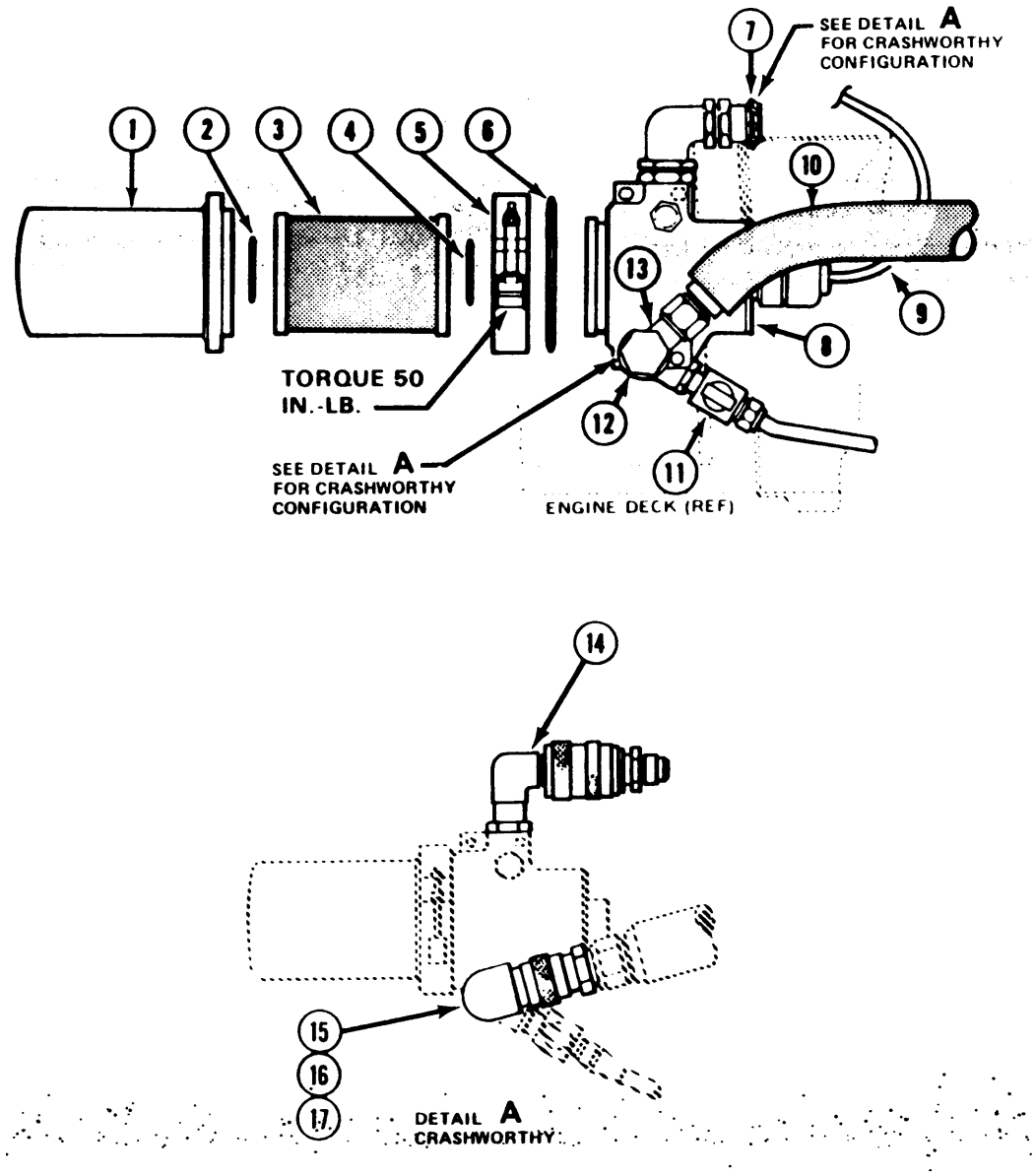

1. Strainer body
2. Preformed packing (MS29513-24)
3. Filter element (204-040-760-13)
4. Preformed packing (MS29513-24)
5. Coupling
6. Preformed packing (MS29513-237)
7. Fuel outlet to engine
8. Filter head
9. Electrical wiring to caution panel
10. Fuel inlet hose
11. Filter drain valve
12. Bolt
13. Elbow
14. Coupling half, self-sealing, shearable
15. Valve, self-sealing, breakaway
16. Nut
17. Packing

Figure 10-5. Fuel Filter Assembly — Exploded View

(4) Install packing (6) around upper lip of filter body (1) next to flange

(5) Install body assembly (1) into filter head (8), pressing firmly to seat

CAUTION

Do not overtorque clamp to prevent leakage; use new packing or filter if leakage persists.

(6) Install coupling (5) around mating flanges of filter head and body. Ensure slot is at 6 o'clock position. Torque clamp to 50 inch-pounds.

c. Connect hose from engine fuel control inlet to outlet coupling on filter

d. During next ground run-up check fuel filter and connections for leaks Also ensure FUEL FILTER caution panel does not light.

NOTE

Ensure engine inlet fuel system quick disconnect couplings are tightened.

10-27. CELL DRAIN VALVE.

10-28. Description—Cell Drain Valve. A cell drain valve (13, figure 10-3) is located in bottom of front section in each forward fuel cell assembly. The valve is used to drain residual fuel and water (moisture) from the system.

10-29. Removal—Cell Drain Valve.

a. Defuel system.

b. Remove valve (13) and packing.

10-30. Inspection—Cell Drain Valve. Inspect valve for nicks, scratches, corrosion and leakage.

10-31. Replacement—Cell Drain Valve. If valve fails inspection requirements, replace valve.

10-32. Installation—Cell Drain Valve.

a. Install drain valve (13, figure 10-3) with packing to fuel cell opening. Torque drain valve to 50 inch pounds. Safety with lockwire (C155).

b. Service fuel system and inspect valve for leakage.

10-33. PRESSURE TRANSMITTER.

10-34. Description—Pressure Transmitter. A pressure transmitter is located on the front of the engine forward firewall and is accessible through the right aft pylon panel. The pressure transmitter relays fuel pressure to fuel pressure gage on instrument panel.

10-35. Removal—Pressure Transmitter.

a. Remove access panel on pylon bulkhead.

b. Disconnect hose assembly (7, figure 10-6) from transmitter

c. Remove four screws (1) and four washers (2)

d. Disconnect electrical plug and remove transmitter.

10-36. Inspection—Pressure Transmitter.

a. Inspect transmitter for leaks, corrosion or damage.

b. Inspect transmitter for proper operation in accordance with troubleshooting procedure. Refer to paragraph 10-17.

10-37. Replacement—Pressure Transmitter.

a. Remove existing union (6) and packing (5) from defective transmitter.

b. Install new packing (5) on union (6) Install union in replacement transmitter.

10-38. Installation—Pressure Transmitter.

a. Install transmitter (4) to mounting bracket (3). Secure using four washers (2) and four screws (1).

b. Install hose assembly (7) to transmitter.

c. Connect electrical plug to transmitter

d. Install access panel on pylon bulkhead.

10-39. Test Procedures—Pressure Transmitter. Ground run helicopter and check fuel pressure gage for proper fuel pressure indication.

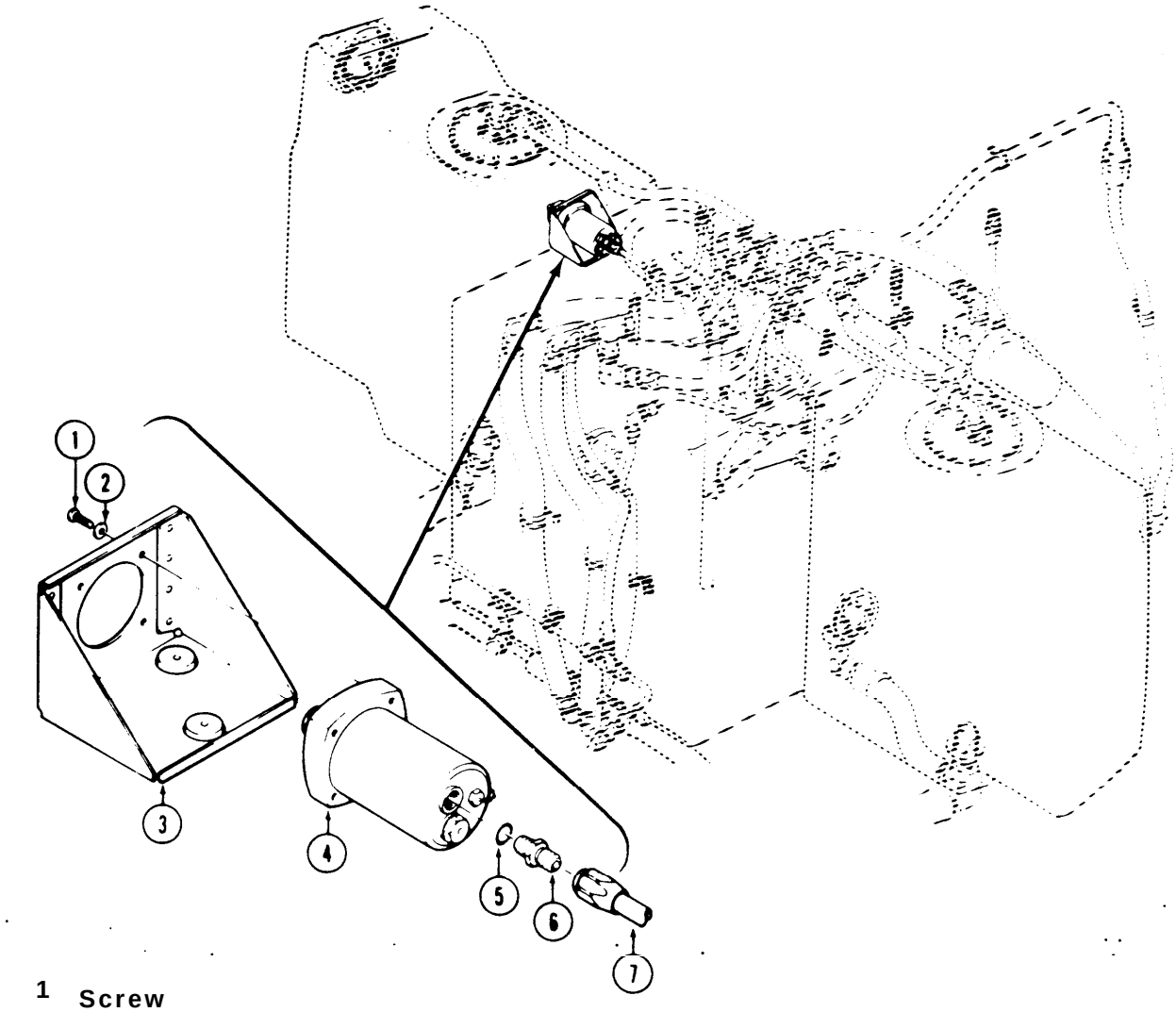

1. Screw
2. Washer
3. Mounting bracket
4. Fuel pressure transmitter
5. Preformed packing
6. Union
7. Hose assembly

Figure 10-6. Fuel Pressure Transmitter Installation

10-40. SHUTOFF VALVE — MOTOR DRIVEN.

10-41. Description — Shutoff Valve — Motor Driven. A motor-operated type gate valve (figure 10-7), in main fuel line before filter, is mounted on front of engine forward firewall and is accessible through a door on left side of pylon structure. Valve is controlled by MAIN FUEL switch, and has a manual override handle which also serves as a visual position indicator. A thermal relief valve allows internal bypass of fuel trapped on outlet side of shutoff valve, being set to crack at 90 to 120 psig and to reseat at 80 psig minimum.

10-42. Removal — Shut-Off Valve — Motor Driven. a. Open left engine cowling and remove left lower access panel from pylon island.

b. Provide suitable container to catch fuel, and disconnect fuel hose from union (21, figure 10-7). Remove nut (19) and washer (20) from union.

c. Disconnect electrical connector from shutoff valve (12)

d. Disconnect fuel inlet hoses from bottom of check valve manifold (32) and transmitter hose from restrictor (1).

e. Remove bolts (24), nuts (7) and washers (8) securing shutoff valve to bracket (25).

f. Remove nuts (34) and washers (6) from bolts (5)

g. Remove shutoff valve (12, figure 10-10) and check valve manifold (32). Reinstall washers (33) and nuts (34) temporarily to retain spacers (4) and bolt (5) in place

h. Disassemble shutoff valve and check valve manifold as follows:

(1) Remove bolts (15), washers and nuts (7) and separate shutoff valve from manifold (32).

(2) Remove elbow (23) from fitting (14) and remove flange (28) from fitting. Do not remove union (21) from elbow (23) unless required for parts replacement.

(3) Remove fitting (10) and flange (9) from check valve manifold (32).

(4) Discard packings (11 and 18)

10-43. Inspection — Shutoff Valve — Motor Driven. a. Inspect shutoff valve for leaks (no leakage allowed), damage and corrosion.

b. Inspect shutoff valve for proper operation (paragraph 10-46).

10-44. Repair or Replacement — Shutoff Valve — Motor Driven. a. Assemble shutoff valve (12) and check valve manifold (32) as follows:

(1) Position flange (9) and packing (29) on fitting (10) and install fitting in port of check valve manifold (32).

(2) Assemble fitting (14, figure 10-7), packing (18) and elbow (23). Install packing (22) and union (21) if removed.

(3) Using packing (11 and 13) position fittings (10 and 14) on shutoff valve (12). Install two bolts (15) with washers and nuts (7). Do not tighten nuts at this time.

10-45. Installation — Shutoff Valve — Motor Driven. a. Remove (34) and washers from bolts (5). Hold bolts (5) in place through firewall with spacers (4) installed. Position shutoff valve and check valve manifold assembly to firewall with bolts (5) through mounting holes of check valve assembly and union (21) through hole in firewell.

b. Position three washers (27) between mounting holes of bracket (25) and each lower mounting hole of flange (28). Install bolts (24), with washers and nuts (7). Align elbow (23) and fuel valve manifold (32). Tighten nuts (7) evenly.

c. Install washers and nuts (34) on bolts (5).

d. Install washer (20) and nut (19) on union (21).

e. Connect fuel inlet hoses to fittings on bottom of valve manifold and hose from transmitter to restrictor (1).

f. Connect electrical connector to fuel shutoff valve and lockwire (C155).

g. Connect fuel hose to union (21).

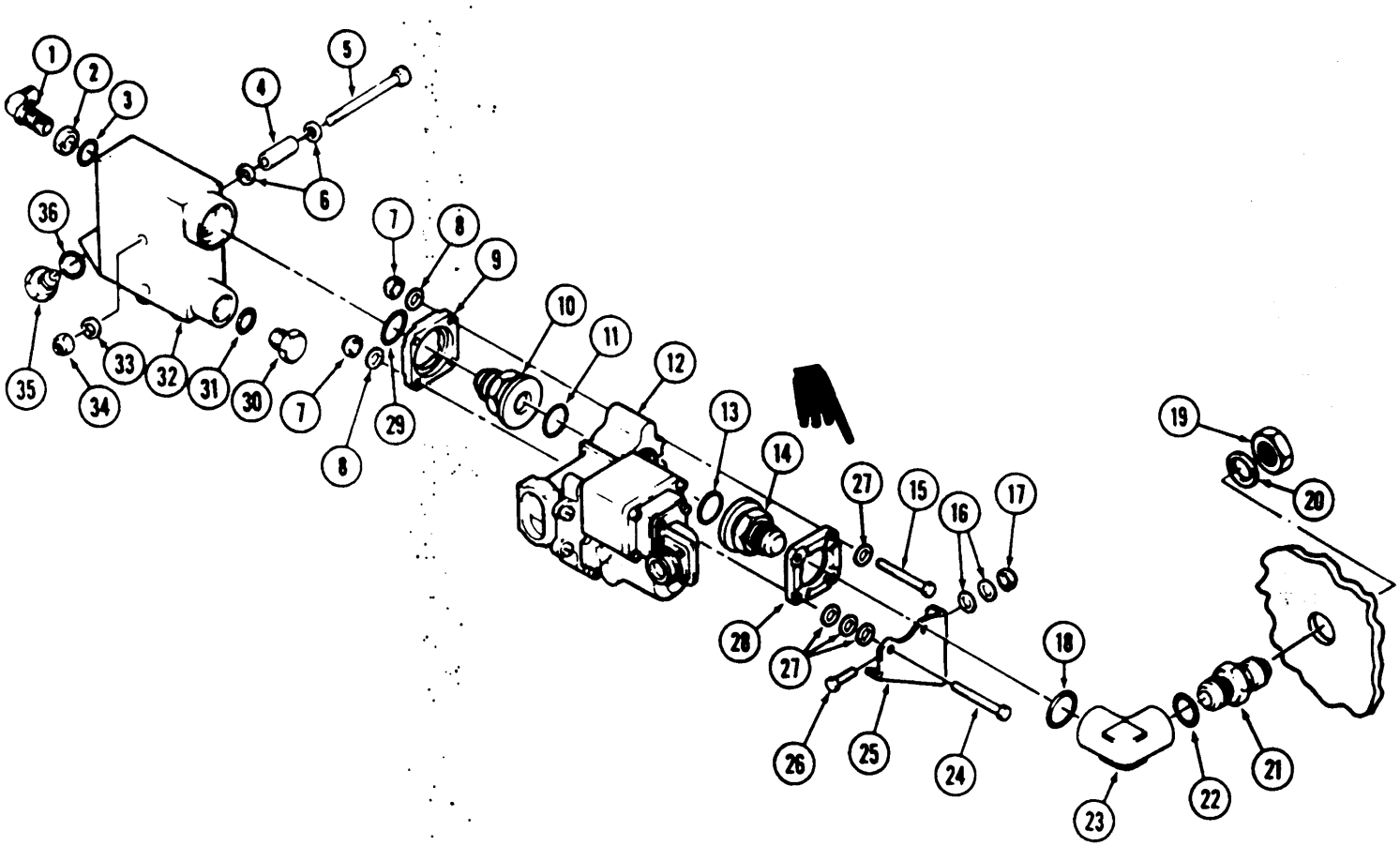

1. Restrictor
2. Nut
3. Preformed packing
4. Spacer
5. Bolt
6. Washers
7. Nut
8. Washer
9. Flange
10. Fitting
11. Preformed packing
12. Fuel shutoff valve
13. Preformed packing
14. Fitting
15. Bolt
16. Washers
17. Nut
18. Preformed packing
19. Nut
20. Washer
21. Union
22. Preformed packing
23. Elbow
24. Bolt
25. Bracket
26. Bolt
27. Washers
28. Flange
29. Preformed packing
30. Plug
31. Preformed packing
32. Fuel valve manifold
33. Washer
34. Nut
35. Plug
36. Preformed packing

Figure 10-7. Shutoff Valve - Motor Driven and Check Valve Manifold

Figure 10-7. Shutoff Valve - Motor Driven and Check Valve Manifold

10-46. Test Procedures - Shutoff Valve - Motor Driven. a. Place BAT switch ON, move FUEL switch to ON. Check all disturbed points for fuel leaks. Observe that manual override handle on fuel shutoff valve moves to open position. Move FUEL switch to OFF. Observe that manual override handle moves to dosed position. Place BAT Switch OFF.

b. Close engine cowling and install access panel on pylon island.

10-47. GOVERNOR BLEED CHECK VALVE.

10-48. Description - Governor Bleed Check Valve. A governor bleed check valve is located in the governor bleed return line connected to center fuel cell assembly. The governor bleed check valve allows separated air and fuel vapor to return to fuel tank and prevents reverse flow of fuel.

10-49. Removal – Governor Bleed Check Valve. a. Defuel system.

b. Working through access door (53, figure 2-18) disconnect hose or tube assembly from check valve.

c. Remove nut, check valve and packing.

10-50. Inspection - Governor Bleed Check Valve Inspect check valve for corrosion, leaks and security.

10-51. Repair or Replacement-Governor Bleed Check Valve. Replace check valve if corroded, damaged or if leakage exists.

10-52. Installation - Governor Bleed Check Valve. a. Install packing and nut to check valve and install in fuel cell. Tighten nut.

b. Connect hose or tube assembly to check valve.

10-53. Test Procedures - Governor Bleed Check Valve. Perform fuel system operational check (paragraph 10-18).

10-54. MANIFOLD ASSEMBLY.

10.55. Description - Manifold Assembly. A check valve manifold (32, figure 10-7), is located at left front of engine forward firewall and is connected into fuel pressure lines ahead of shutoff valve. Manifold contains two separate valve elements at inlet ports, each consisting of a check valve which prevents reverse flow except through its thermal relief bypass of trapped fuel. Manifold also has an outlet port and a tap for fuel pressure gage transmitter at outlet side of check valves.

10-56. Removal - Manifold Assembly. a Remove fuel shutoff valve (12, figure 10-7) and manifold (32) as an assembly (paragraph 10-42).

b. Separate manifold (32) from fuel shutoff valve (paragraph 10-42).

c. Remove restrictor (1), nut (2), packing (3), plugs (30 and 35) and packings (31 and 36). Discard packings.

10-57. Inspection - Manifold Assembly. a Inspect manifold assembly for damage, corrosion and leaks.

b. Inspect check valves in manifold for proper operation (paragraphs 10-18 and 10-19).

10-58. Repair or replacement - Manifold Assembly. a. Assemble packing (3, figure 10-7), restrictor (1) and nut (2) to manifold.

b. Assemble plugs (30 and 35) and packings (31 and 36) to manifold.

10-59. Installation - Manifold Assembly. a. Assemble manifold (32) to fuel shutoff valve (paragraph 10-44).

b. Install manifold to firewall (paragraph 10-45).

c. Torque limits for installing valve seats (union) are . 150 to 210 inch-pounds.

10-60. CROSSOVER ASSEMBLIES.

10-61. Description - Crossover Assemblies. Six crossover assemblies (7, figure 10-3) interconnect forward and aft fuel cells. Each crossover has a flange type fitting for connection to fuel cell or crossover.

NOTE

It is critical to proper operation of the "20 Minute Fuel Warning" and fuel quantity indication that the aft crossover line for the forward underfloor tanks to open and reasonably unrestricted. If either or both ejector pumps are inoperative, the forward crossover line must be open and reasonably unrestricted. Restrictions can be caused by kinked or collapsed lines or hoses. Self-sealing hoses that are partially activated can cause bulges or restrictions to form in the inner liner. An improper fitting, couplings, or connector might restrict flow. The 205-062-652-1 coupling could be actuated, partially actuated, or clogged. The crossover lines could also just be clogged with contamination.

10-62 Removal — Crossover Assemblies.

NOTE

Removal procedures are identical for either side.

a. Lower Forward Crossover.

(1) Defuel system (paragraph 1-3).

(2) Remove access panels (48 and 57, figure 2-18).

(3) Remove six bolts, six washers and packing from forward connection.

(4) Remove four bolts, four washers, four nuts and packing connecting lower forward crossover to upper crossovers.

(5) Remove lower forward crossover assembly.

b. Upper Crossover Assemblies.

(1) Defuel system (paragraph 1-3).

(2) Remove four bolts, four washers and packing securing inboard crossover to center fuel cell.

(3) Remove four bolts, four washers and packing securing outboard crossover to outboard fuel cell.

(4) Remove four bolts, four washers and four nuts connecting upper crossovers to lower forward crossover.

(5) Remove upper crossovers.

10-63. Inspection - Crossover Assemblies. Inspect crossover assemblies for nicks, scratches, damage, and flow restrictions.

10-64. Repair or Replacement — Crossover Assemblies.

a. Burnish out scratches, nicks or burrs less than **0.005** inch deep on the mating surfaces and in sealing groove of fitting using crocus cloth (C68). Treat repaired area using brush alodine (C62).

b. Repair damage exceeding **0.005** inch but not more than **0.020** inch in depth as follows:

(1) Isolate the damaged areas and sand, using 180 grit sandpaper (C231).

WARNING

Cleaning materials are flammable and toxic. Avoid skin contact and breathing of solvent vapors.

(2) Clean with P-D-680, Type II (C261), followed by an isopropyl alcohol (C41) rinse. Ensure surface is dry before sealing.

(3) Air dry and apply adhesive (C29). Allow to dry at room temperature for a minimum of **24** hours.

c. Replace any crossover assembly if damage is extensive or if nicks, scratches, or burrs exceed **0.020** inch depth.

10-65. Installation — Crossover Assemblies.

a. Lower Forward Crossover.

(1) Connect lower forward crossover to forward fuel cell using packing, six washers and six bolts.

(2) Connect opposite end to upper outboard crossover using packing, four bolts, four washers and four nuts.

b. Upper Crossover Assemblies.

(1) Connect upper outboard crossover to outboard fuel cell using packing, four washers and four bolts.

(2) Connect upper inboard crossover to center fuel cell using packing, four washers and four bolts.

(3) Connect upper outboard crossover to lower forward crossover using packings, four bolts, four washers and four nuts.

(4) Refuel fuel system and check for leaks.

10-66. SIPHON BREAKER VALVE.

10-67. Description — Siphon Breaker Valve. A siphon breaker (check) valve (1, figure 10-8) in the vent system allows air to vent into the forward tanks through overboard vent and prevents fuel from siphoning out of cells through overboard drain.

10-68. Removal — Siphon Breaker Valve.

a. Remove access cover.

CAUTION

If aircraft has full tanks of fuel, siphon may be under pressure. If pressure is evident, resecure siphon and run aircraft or drain tank at least 6 inches below fuel cap to relieve pressure.

b. Remove siphon breaker valve (1, figure 10-8) and packing (2).

10-69. Inspection — Siphon Breaker Valve. Inspect valve for corrosion, leakage and damage.

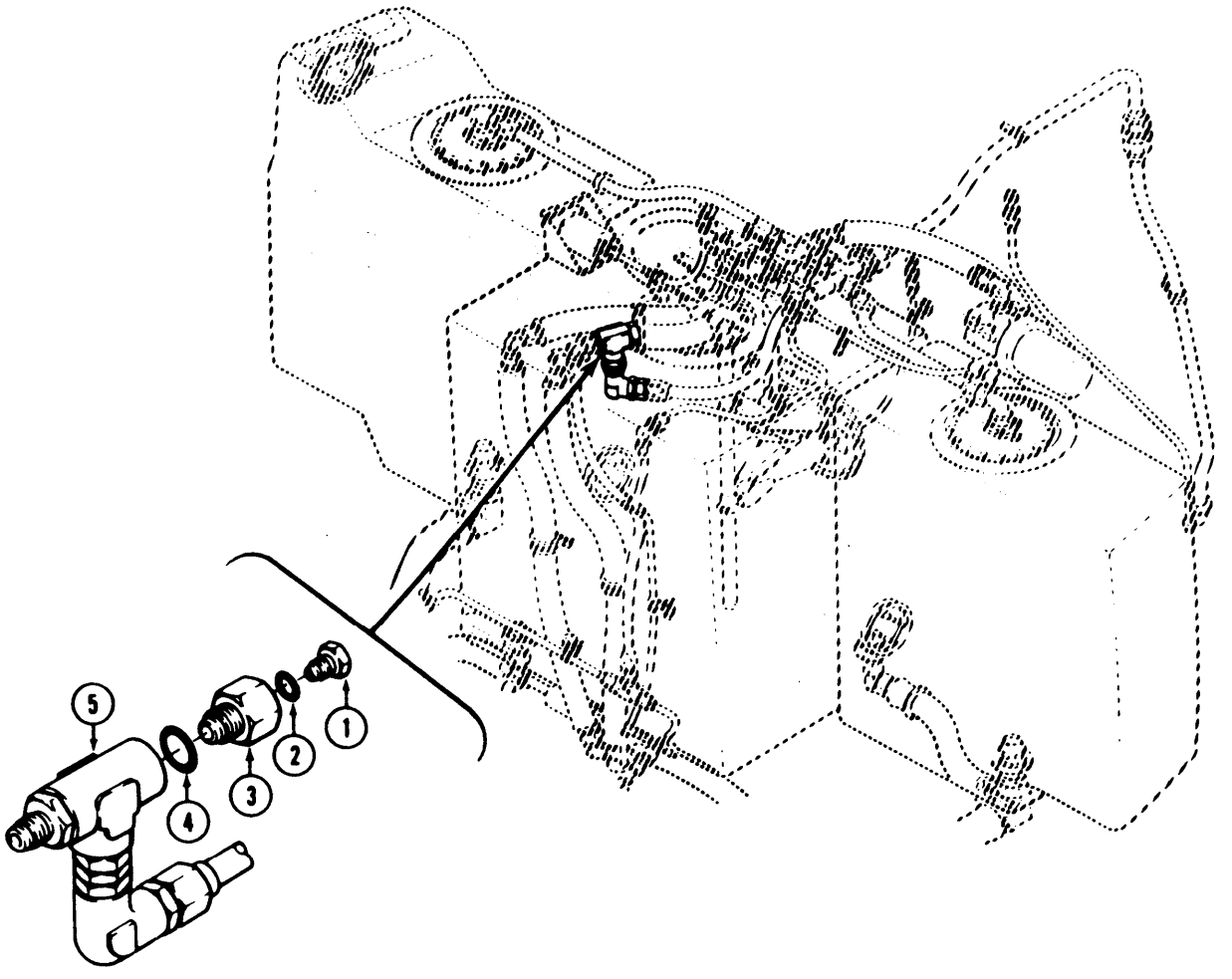

1. Siphon breaker valve
2. Preformed packing
3. Fitting
4. Performed packing
5. Tee.

Figure 10-8. Siphon Breaker Valve Installation

10-70. Repair or Replacement — Siphon Breaker Valve. If valve does not meet inspection requirements, replace valve.

10-71. Installation — Siphon Breaker Valve.

a. Install replacement valve (1) with packing (2) to fitting (3).

b. Install access cover (38, figure 2-13).

10-72. COVER PLATE — AFT CENTER FUEL CELL.

10-73. Description — Coverplate — Aft Center Fuel Cell. The aft center fuel cell incorporates a coverplate (access) (3, figure 10-9), which allows internal access to fuel cell and is used for removal/installation of fuel cell. A fuel quantity transmitter (probe) and a float switch are mounted on coverplate.

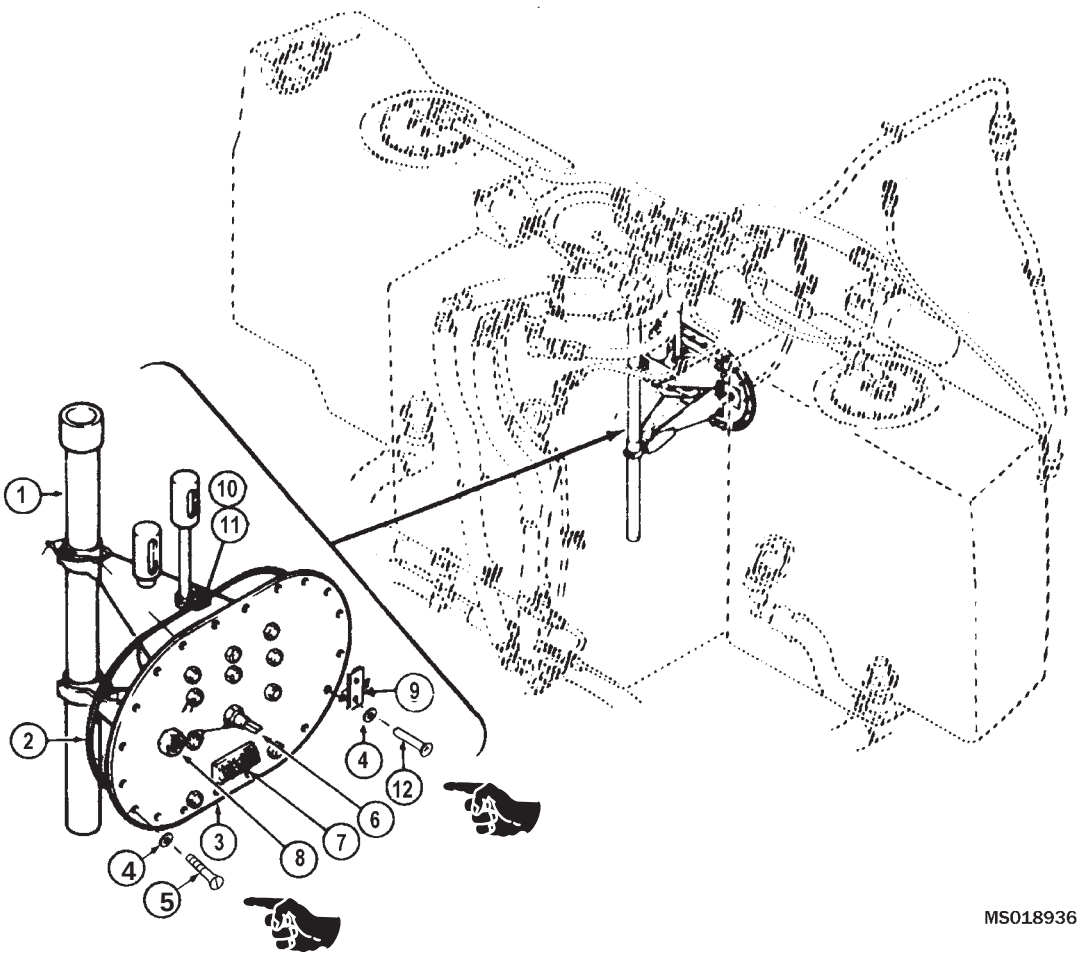

1.	Fuel quantity transmitter (probe)	7.	Fuel quantity transmitter electrical connection
2.	Preformed packing	8.	Governor bleed valve tube connection
3.	Cover plate (aft center fuel cell)	9.	Retainer
4.	Washer	10.	Clamp
5.	Screw	11.	Bolt
6.	Float quantity transmitter electrical connection	12.	Bolt

Figure 10-9. Cover Plate Installation — Aft Center Fuel Cell

10-74. Removal—Coverplate—Aft Center Fuel Cell.

a. Disconnect tube assembly at governor bleed valve location.

b. Disconnect fuel quantity transmitter and float switch electrical connectors.

c. Remove screws (5), bolts (12), and washers (4) securing coverplate (3) to structure.

d. Remove clips and ty-rap security transmitter (1) to coverplate (3).

e. Carefully remove transmitter (1) and coverplate (3). Remove packing (2) from fuel cell.

10-75. Inspection—Coverplate—Aft Center Fuel Cell. Inspect coverplate (3) for cracks, nicks, corrosion and damage.

10-76. Repair or Replacement—Coverplate—Aft Center Fuel Cell. Replace coverplate (3) if damage or subsequent repair would interfere with the fit or function of coverplate.

NOTE

Fuel quantity transmitter support brackets frequently become overstressed during installation of the coverplate (3). Brackets PN 5340-UH-1-6821 and 5340-UH-1-6823 should be installed. In addition, clamp (10) must have bolthead (11) installed toward coverplate. This will ease installation of the cover plate (3) and avoid overstressing the brackets.

10-77. Installation — Coverplate — Aft Center Fuel Cell.

a. Partially position coverplate (3) in fuel cell, secure transmitter to coverplate using clips and ty-rap.

b. Install (2) to fuel cell.

c. Secure coverplate using screws (5), bolts (12), retainers (9), and washers (4).

d. Install tube assembly at governor bleed valve location.

e. Connect transmitter and float switch connections. Lockwire where applicable.

f. Pressure test fuel cell (paragraph (10-19).

g. Adjust per (paragraph (8-249).

10-78. Deleted.

10-79. Deleted.

10-80. Deleted.

10-81. Deleted.

10-82. Deleted.

Figure 10-10. Deleted.

10-83. CLOSED CIRCUIT REFUELING RECEIVER ASSEMBLY.

10-84. Description — Closed Circuit Refueling Receiver Assembly. A closed circuit refueling receiver may be installed in place of a cap and adapter assembly. Receiver assembly is designed to accept a closed circuit refueling nozzle. Receiver assembly provides for automatic shutoff of fuel flow at a predetermined level during refueling operations. Lower portion of receiver assembly may be rotated to allow refueling with standard type nozzle.

CAUTION

Accomplish the following in a well ventilated area, ensuring helicopter is properly grounded.

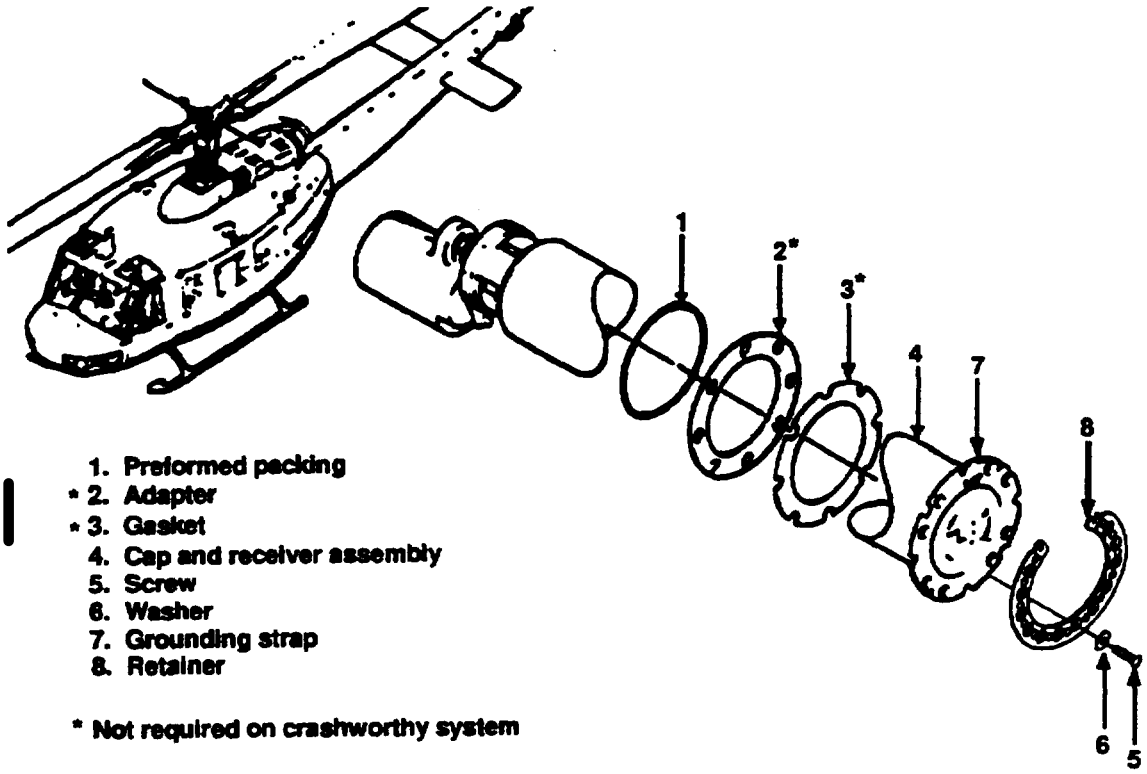

Figure 10-11. Closed Circuit Refueling Receiver.

10-85. Removal Closed Circuit Refueling Receiver Assembly.

a. Disconnect battery or external power source. Defuel system to a level below the refueling receiver assembly.

a.1. Remove screws (5 figure 1 0-11) and washers (6) attaching receiver and grounding strap to helicopter structure.

b. Remove packing (1) and receiver (4).

10-86. Inspection Closed Circuit Refueling Receiver Assembly.

a. Inspect closed circuit refueling receiver for damage, dents and corrosion.
b. Inspect locking cover for proper locking.
c. Inspect fuel cap lanyard cable for security.
d. Inspect for grounding strap security.
e. Perform resistance check on ground strap by measuring the resistance from the ground strap to the aircraft per TM 55-1500-323-24, paragraph 8-26 through 828. An equivalent multimeter may be used.

10-87. Installation.

a. Position packing (1, figure 10-11) on receiver (4).
b. Secure receiver and grounding strap using washers (6) and screws (5).
c. Connect battery and refuel system.

10-88. Closed Circuit Refueling Receiver.

Helicopters modified by MVWO 55-1520-210-30-55 have an improved dosed circuit refueling receiver instead of the original dosed circuit receiver. This receiver will accept fuel at a rate of 65 gallons per minute. The receiver will automatically shut off when the fuel system is full or when fuel cell internal pressure exceeds 2.5 psi.

10-89. Removal Closed Circuit Refueling Receiver.

a. Disconnect battery or external power source. Defuel system as required.
b. Remove screws (1, figure 10-12), washers (2), and retainer (3).
c. Remove receiver (4) and packing (5).

10-90. Inspection. If receiver has caused leaking out tank vent tube during dosed circuit refueling or if receiver is new, check for sheet steel deflector between receiver can and control module. If missing, install. Refer to paragraph 10-86.

10-91. Installation Deflector.

a. Place cap and receiver assembly on clean surface with filler face down and control module turned toward mechanic.
b. Hold deflector assembly in place with rivet toward mechanic and rivet head facing down.
c. With deflector spread open, insert and close deflector around four screws which secure control module to receiver assembly. Do not loosen screws, deflector is located between control module and receiver.
d. Holding deflector in place, bend locking tabs 30 to 40 degrees up locking deflector in place.

NOTE
Deflector should freely move up and down on screws.

10-92. Installation Closed Circuit Refueling Receiver.

a. Install packing (5) in groove around fuel cell opening.
b. Position receiver (4) and retainer (3) over packing (5).
c. Install screws (1) with washers (2).
d. Connect battery and refuel system.

10-93. FLOAT – 20 MINUTE FUEL WARNING SYSTEM.

10-94. Description – 20 Minute Fuel Warning System. A float is located on the left fuel cell sump assembly. The float switch illuminates the 20 MINUTE FUEL caution light located in the pedestal caution panel. Illumination occurs when fuel quantity decreases to 185 (±55) pounds.

NOTE

It is critical to proper operation of the "20 Minute Fuel Warning" and the fuel quantity indication that the aft crossover line for the forward underfloor tanks be open and reasonably unrestricted. If either or both ejector pumps are inoperative, the forward crossover line must be open and reasonably unrestricted. Restrictions can be caused by kinked or collapsed lines or hoses. Self-sealing hoses that are partially activated can cause bulges or restrictions to form in the inner liner. An improper fitting, coupling, or connector might restrict flow. The 205-062652-1 coupling could be actuated, partially actuated, or clogged. The crossover lines could also just be clogged with contamination. It is normal for one fuel boost pump to produce more pressure that the other boost pump. The stronger pump will supply all the fuel to the engine. The aft crossover line balances the tanks for proper lateral balance, fuel quantity readings and "20 Minute Fuel Warning" operation. If the crossover line is not working, a strong left pump will produce an early "20 Minute Fuel Warning" and a strong right pump will produce a late "20 Minute Fuel Warning". The problem is the line, not the pumps.

10-95. Removal - Float Switch - 20 Minute Fuel Warning System.

a. Defuel system.

b. Disconnect battery.

c. Remove left fuel cell sump assembly (paragraph 10-137).

d. Unscrew float switch from standpipe, pull switch and wires through standpipe.

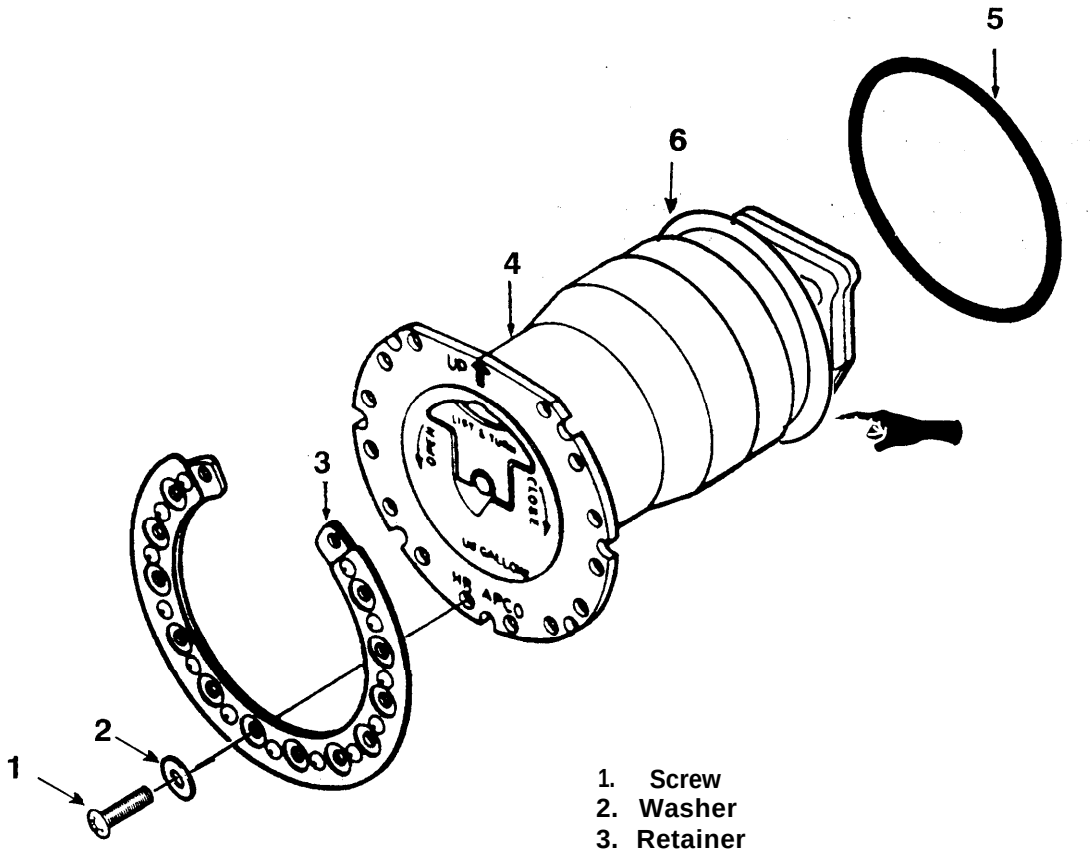

1. Screw
2. Washer
3. Retainer
4. Receiver
5. Packing
6. Deflector

Figure 10-12. Closed Circuit Refueling Receiver (MMO 55-1520-210-30-55).

10-96. Inspection — Float Switch — 20 Minute Fuel Warning System. Inspect float switch for cracks, damage and security.

10-97. Repair and Replacement — Float Switch — 20 Minute Fuel Warning System. Replace float switch if inoperative or if damage exceeds inspection requirements.

10-98. Installation — Float Switch — 20 Minute Fuel Warning System. a. Install packing to float switch, thread float switch wiring through standpipe and screw switch to standpipe.

b. Reinstall fuel cell sump assembly (paragraph 10-144).

c. Refuel system and connect battery.

10-99. Test Procedures — Float Switch — 20 Minute Fuel Warning System. Ensure electrical circuit is functioning properly and test float switch in accordance with paragraph 10-18.

10-100. FUEL BOOST PUMPS.

10-101. Description — Fuel Boost Pumps. An impeller type fuel boost pump is located in each forward fuel cell sump assembly. The boost pumps are 28 Vdc electrically operated and deliver fuel under pressure to engine fuel control, passing through fuel manifold and fuel shutoff valve.

NOTE

On helicopters prior to serial no. 69-15292, a bleed air or an electrically operated boost pump may be installed in left fuel cell sump assembly.

10-102. Troubleshooting — Fuel Boost Pumps.

NOTE

Before using table 10-3 ensure that all normal operational checks have been accomplished. If a malfunction is found which is not listed in this table, notify the next higher level of maintenance.

Table 10-3. Troubleshooting — Fuel Boost Pumps

CONDITION

TEST OR INSPECTION

CORRECTIVE ACTION

1. Electrical boost pump warning light illuminated, no pressure indicated on fuel pressure gage.

STEP 1. Check boost pump for correct operation.

If boost pump is inoperative, replace boost pump (paragraph (10-104).

STEP 2. Check for faulty wiring.

Correct wiring if defective (paragraph 9-5).

2. Electrical boost pump warning light illuminated, pressure indicated on fuel pressure **gage.**

STEP 1. Check ejector pump for malfunction and foreign material in ejector pump and/or hoses.

Clean foreign material from ejector pump and/or hoses. Replace ejector pump if inoperative (paragraph 10-118). Remove screen from crossfitting (paragraph 10-105).

Table 10-3. Troubleshooting — Fuel Boost Pumps (Cont)

CONDITION

TEST OR INSPECTION

CORRECTIVE ACTION

STEP 2. Test check valve for proper operation.

Replace check valve if defective (paragraph 10-153).

STEP 3. Test flow switch for proper operation.

Replace flow switch if defective (paragraph 10-148).

STEP 4. Check for grounded wire to warning light.

Correct wiring if faulty (paragraph 9-6).

3. Bleed air boost pump warning light illuminated, fuel pressure low or zero.

STEP 1. Check bleed air fuel boost pump for operation.

If boost pump is inoperative, replace boost pump (paragraph 10-104).

4. Bleed air boost pump warning light illuminated, pressure normal on fuel pressure gage.

STEP 1. Check ejector pump for malfunction and foreign material in ejector pump and/or hoses.

Clean foreign material from ejector pump and/or hoses. Replace ejector pump if inoperative (paragraph 10-118). Remove screen from crossfitting (paragraph 10-105).

STEP 2. Test check valve for proper operation.

Replace check valve if defective (paragraph 10-153).

STEP 3. Test flow switch for proper operation.

Replace flow switch if defective (paragraph 10-148).

STEP 4. Check for grounded wire to warning light.

Correct wiring if faulty (paragraph 9-5).

10-103. Removal — Fuel Boost Pumps.

NOTE

Removal procedures are identical for right or left side fuel boost pump.

a. Disconnect battery and electrical wiring. On bleed air boost pumps, disconnect air hose.

NOTE

Always cover any fuel cell openings and cap all open fuel lines to prevent contamination.

NOTE

Mark position of fuel boost pump before removal to aid in installation.

CAUTION

Ensure aircraft has been defueled.

b. Remove boost pump mounting bolts (13, figure 10-13) and drop pump down approximately 2 inches.

c. Cut lockwire, remove bolt (15), washer (17), packing (18), plug (19), packing (20) that secures cross fitting (26) and hoses. Remove pump assembly.

10-104. Repair or Replacement Fuel Boost Pumps.

NOTE

If cross fitting contains a conical screen, remove screen and discard. Reinstall cross fitting without screen.

a. Remove pump drain plug (16), packing (14) from defective pump.

b. Replace all packings when reassembling pump.

c. Install packing (14) on pump drain plug (16). Install plug in drain port of pump.

10-105. Installation Fuel Boost Pump.

a. Visually inspect that fuel bleed valve is installed on top of fuel pump housing (35, figure 10-13) on cartridge type pumps.

WARNING

If fuel bleed valve is not installed, engine surging/flameout will occur when fuel level is below top of fuel boost pump housing and the boost pump is off or inoperative.

b. Position pump (1) in mounting port of sump plate (27) with gasket (10) in place. Start bolt (15) approximately 114 inch in cross fitting (26).

NOTE

If cross fitting contains a conical screen, remove screen and discard. Reinstall cross fitting without a screen.

NOTE

A cord may be used as a work aid to hold cross fitting in place, while starting bolt (15).

c. Pull crossfitting into place in pump and remove guide bolt Install washer (17) packing (18), plug (19) and packing (20), on bolt (15). Install bolt (15) and torque to 50 Inch-pounds. Lockwire plug (16) to bolt (15).

CAUTION

Do not place lock wire over electrical leads. If installing the cartridge type boost pump use following lockwire procedure. Lockwire plug (16) to one of the mounting bolts (13) and lockwire bolt (15) to one of the mounting bolts (13).

d. Position boost pump in mounting port of sump plate and secure boost pump to sump plate with bolts (13) and washers (12).

10-105.1 Removal Boost Pump Cartridge (Crashworthy).

a. Disconnect electrical wiring from fuel pump cartridge (38 figure 10-13).

WARNING

A bent Inlet shut off valve arm may prevent shut off valve from completely opening causing a restricted fuel flow.

CAUTION

Apply pressure directly over valve spring when opening or closing valve stem assembly. Trying to compress valve spring from free end of valve arm will cause valve arm to bend. When removing or installing shoulder screw, keep valve arm depressed.

b. Remove lockwire and screw (39). Turn arm (38) to extreme counterclockwise position.

c. Remove fuel pump drain plug (37) and drain residual fuel into suitable container.

d. Remove lockring (40) securing fuel pump cartridge (36) to fuel pump housing (35).

e. Remove fuel pump cartridge (36) from fuel pump housing (35) using cartridge removal tool (figure 10-13.1). Discard packings (41).

10-105.2 Installation Boost Pump Cartridge (Crashworthy).

a. Install packings (41, figure 10-13) insert fuel pump cartridge (36) into fuel pump housing (35) ensuring arrows on fuel pump and fuel pump housing align.

b. Install lockring (40) securing fuel pump cartridge (36) to fuel pump housing (35).

c. Install fuel pump drain plug (37) into fuel pump. Lockwire drain plug to drain plug adapter.

WARNING

A bent inlet shut off valve arm may prevent shut off valve from completely opening causing a restricted fuel flow.

CAUTION

Apply pressure directly over valve spring when opening or closing valve stem assembly. Trying to compress valve spring from free end of valve arm will cause valve arm to bend. When removing or installing shoulder screw, keep valve arm depressed.

d. Turn arm (38) clockwise, while pressing spring loaded end of arm up, into alignment with hole for screw (39). While holding arm (38) up, install negative ground lead between arm and cartridge. Install screw (39) and lockwire (Ci55).

e. Connect electrical wiring to fuel pump cartridge (36).

NOTE

If pressure is indicated, check for malfunction of ejector pump or check valve flow switch or existence of clogged screens in cross fittings.

10-106. Functional Test Fuel Boost Pumps and Ejector Pumps.

NOTE

The fuel pressure gage is an AC powered instrument. An inverter must be operating in order to provide gage Indications.

a. Right fuel pump.

(1) Turn electrical power ON.

(2) Turn main fuel switch ON.

(3) Fuel boost circuit breaker IN.

(4) If RIGHT FUEL BOOST light is on, check fuel pressure gage for correct pressure.

(a) If pressure is not indicated, electric boost pump is inoperative.

(b) If pressure is indicated, check for malfunction of ejector pump or check valve flow switch or existence of clogged screens in cross fittings.

b. Left fuel pump (bleed air).

(1) Ground run helicopter engine (TM 551520-210-10 or 55-1520-247-10).

(2) Position right electrical fuel boost pump circuit breaker to "OFF' position.

(3) If LEFT FUEL BOOST light is illuminated, check fuel pressure gage for correct pressure.

(a) If pressure is low or zero, the bleed air fuel boost pump is inoperative.

(b) If pressure is normal, the ejector pump is malfunctioning; check valve or flow switch is inoperative, or cross fitting screen is clogged with foreign material.

10-107. CROSS FITTING.

10-108. Description -Cross Fitting. Across fitting (26, figure 10-13) is installed in each boost pump.

10-109. Removal Cross Fitting.

a. Remove the fuel cell sump assembly (paragraph 10-137).

b. Disconnect the fuel lines from inlet and outlet ports of cross fittings (26, figure 10-13).

c. Cut lockwire and remove bolt securing cross fitting to boost pump flange.

d. Remove rubber plugs from lower end of cross fitting.

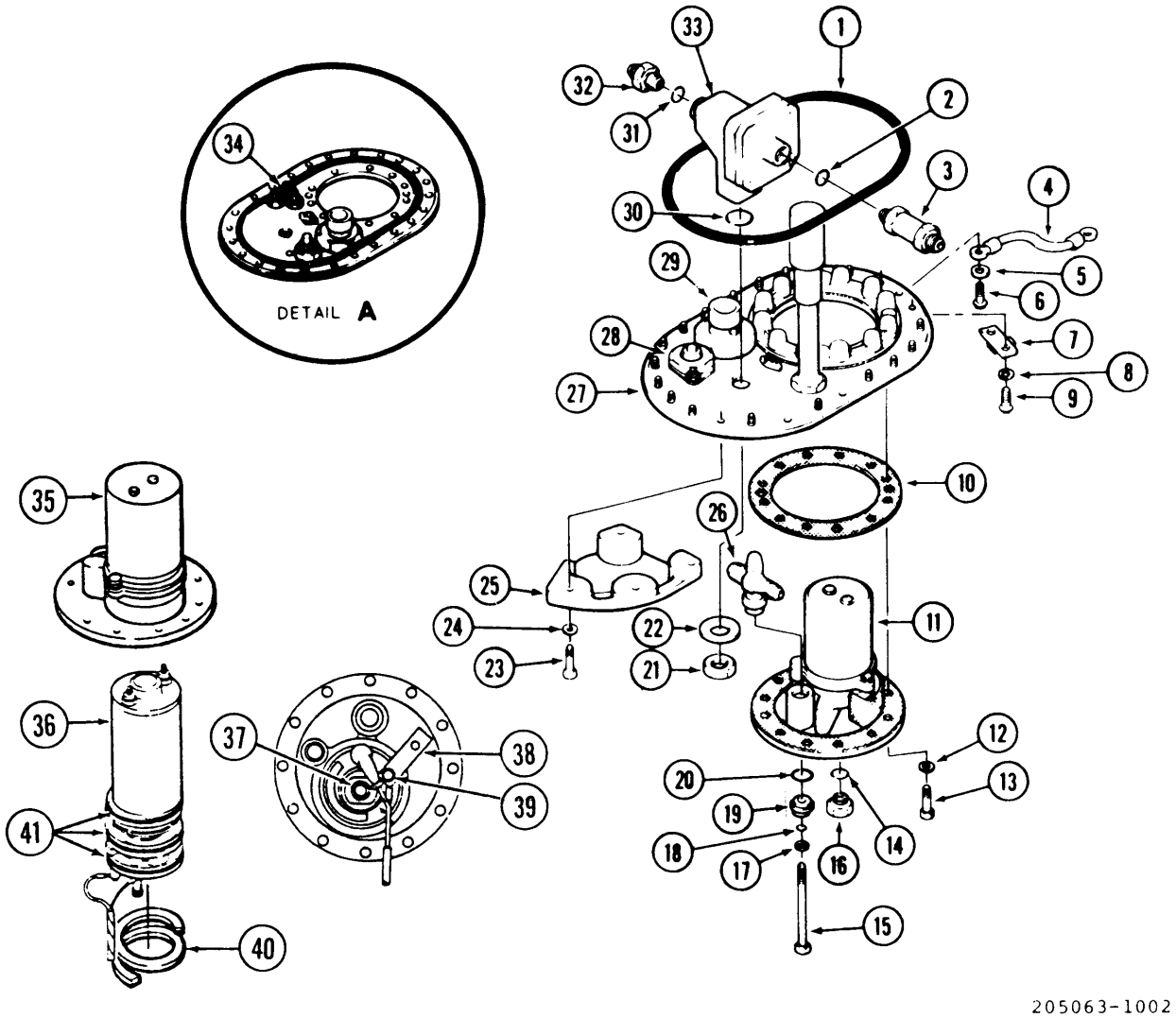

1. Preformed packing
2. Preformed packing
3. Check valve
4. Ground wire
5. Washer
6. Screw
7. Retainer (4 places)
8. Washer
9. Screw
10. Gasket
11. Electric boost pump
12. Washer
13. Bolt
14. Preformed packing
15. Bolt
16. Pump drain plug
17. Washer
18. Preformed packing
19. Retaining plug
20. Preformed packing
21. Nut
22 Washer
23. Bolt
24 Washer
25. Screen cover
26. Cross fitting
27. Sump
28. Sump drain valve
29. Defuel valve
30. Preformed packing
31. Preformed packing
32. Union
33. Flow switch
34. Fuel quantity connections (right side sump only)
35. Fuel pump housing
36. Fuel pump cartridge
37. Pump drain plug
38 : Arm
39. Screw
40. Lockring
41. Packings

Figure 10-13. Forward Fuel Cell Sump Assembly – Typical

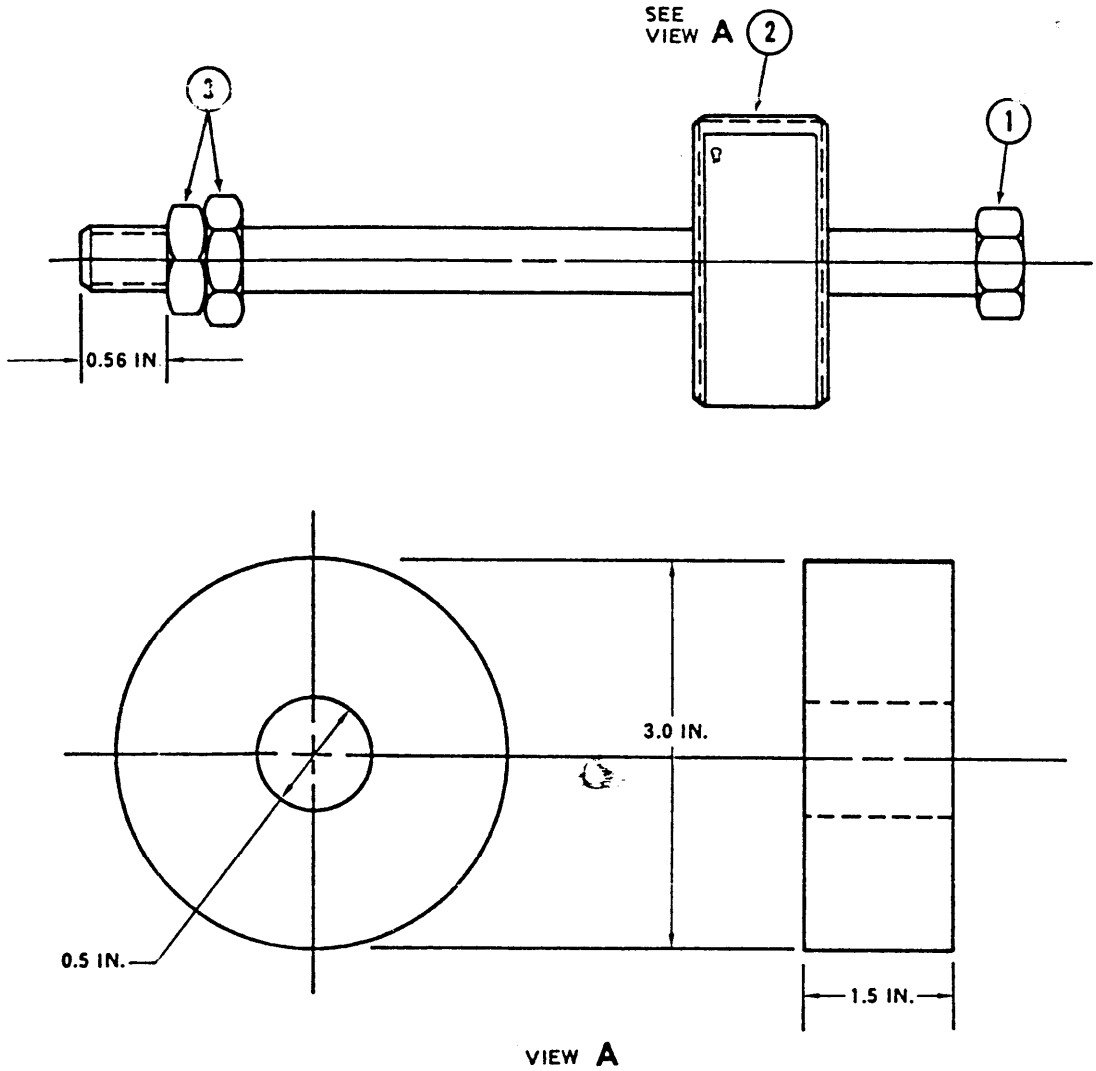

1. Bolt – 7/16-20 Hex Hd. x 6 in. long
2. Sliding weight — 7075 Aluminum Alloy
3. Nut – 7/16-20 Hex (2 ea)

Figure 10-13.1. Work Aid for Fuel Pump Cartridge Removal

10-110. Repair or Replacement-Cross Fitting. Install new rubber plug and two packings in bottom of cross fitting as reassembly.

NOTE

If cross fitting has a conical screen, remove screen and install cross fitting without screen.

10-111. Installation-Cross Fitting. a. Install bolt previously removed through boost pump 11, figure 10-13) flange into cross fitting (26) and secure fitting to boost pump. Torque bolt to 50 inch-pounds and lockwire (C155).

b. Connect fuel lines to each side of cross fitting.

c. Install forward fuel cell sump assembly (paragraph 10-144).

10-112. FUEL QUANTITY TRANSMITTERS.

10-113. Description-Fuel Quantity Transmitter. The fuel system incorporates three fuel quantity transmitters (probes). One transmitter is located in aft center fuel cell and two are located in right forward fuel cell. Refer to paragraph 8-241 for fuel quantity testing.

10-114. Removal—Fuel Quantity Transmitter. Refer to paragraph 10-4 for removal of forward fuel cell and 10-74 for aft fuel cell. Broken or missing mounting ring pins may be replaced with 3/16 inch diameter lexan or acrylic rod. Melt and spread rod ends with a soldering iron to secure in place.

10-115. Installation—Fuel Quantity Transmitter. Refer to paragraph 10-7 for installation of forward fuel cell and 10-76 for aft fuel cell.

10-116. EJECTOR PUMP.

10-117. Description-Ejector Pump. An ejector pump (2, figure 10-14) is located in forward end of each forward fuel cell. The ejector pump continually pumps fuel over fuel cell baffle into rear section of fuel cell, ensuring an adequate fuel level for the fuel boost pump in all flight attitudes.

10-118. Removal Ejector Pump. a. Disconnect battery and all external power sources. Defuel system.

b. Remove floor section directly above forward fuel tank.

c. Loosen 16 bolts in access cover (1, figure 10-14).

d. Gradually work cover (1) out of cell.

e. Disconnect hoses (5 and 6, figure 10-14) from ejector pump (2).

f. Remove bolts (3) that secure pump.

g. Remove ejector pump through access port in cell.

10-119. Cleaning—Ejector Pump. Remove any obstructions from openings in ejector pump using compressed air. If necessary, clean nozzle opening using safety wire. Do not enlarge nozzle hole during cleaning process.

10-120. Inspection-Ejector Pump. Inspect ejector pump for corrosion, damage and general condition.

10-121. Installation—Ejector Pump. a. Install ejector pump through access port in forward fuel cell.

NOTE

Fuel intake port of pump must be pointed toward bottom of tank.

b. Install bolts (3, figure 10-14) and washers (4) that secure pump.

c. Connect hoses (5 and 6) to ejector pump (2).

d. Install access cover (1) in fuel cell access port and tighten bolts.

e. Replace floor panel.

10-122. FLAPPER VALVE.

10-123. Description—Flapper Valve. A flapper valve (16, figure 10-14 is located in forward fuel cell. The flapper valve is located on the baffle and prevents flow of fuel out of sump area when helicopter is in a nose down flight attitude.

10-124. Removal-Flapper Valve. a. Disconnect battery and all external power sources. Defuel system.

b. Remove floor section directly above forward fuel cell.

c. Remove access cover to fuel cell sump assembly.

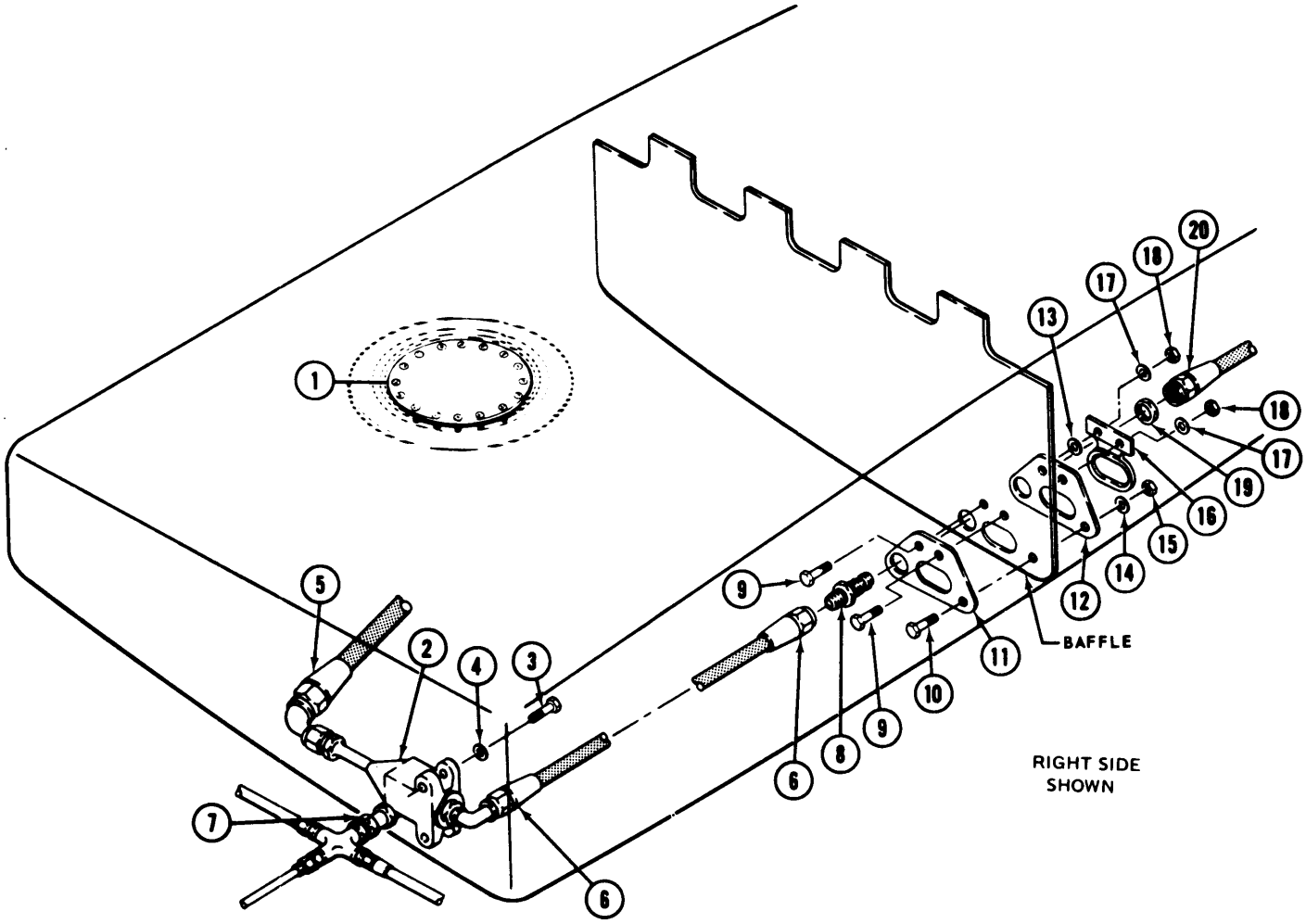

1. Access cover
2. Ejector pump
3. Bolt
4. Washer
5. Hose
6. Hose
7. Fitting
8. Nipple
9. Bolt
10. Bolt
11. Plate
12. Plate
13. Shim washers
14. Washer
15. Nut
16. Flapper valve
17. Washer
18. Nut
19. Nut
20. Hose

Figure 10-14. Fuel System Components

d. Disconnect lines on sump assembly.

e. Remove bolts from sump assembly.

f. Remove sump assembly through access opening.

g. Loosen bolts holding access port cover.

h. Gradually work cover out of opening.

NOTE

Flapper valve is located on the aft side of fuel cell baffle.

i. Remove two bolts (9), nuts (18), and washers (17) from flapper valve (16).

j. Remove flapper valve.

10-125. Inspection — Flapper Valve. Inspect flapper valve (16) for cracks, warpage and damage.

10-126. Repair or Replacement — Flapper Valve. Replace flapper valve if damage exceeds inspection requirements.

10-127. Installation — Flapper Valve. a. Insert bolts (9, figure 10-14) through plates (11 and 12) and shim washers (13) on bolts (9), then install flapper valve (16) on bolts.

b. Check flapper valve to make sure it is flush with opening. Proper clearance is obtained by shimming with washers (13) as required on each bolt (9) between plate (12) and flapper valve (16).

c. Install nuts (18) on bolts (9) and check flapper valve (16) to be sure it is flush with opening. If not, reshim as indicated in step b.

d. Install access port cover.

e. Tighten bolts in cover (1).

f. Install sump assembly through access cover opening.

g. Install and tighten bolts in sump assembly.

h. Connect hoses to sump assembly.

i. Install access cover to fuel cell sump assembly.

j. Apply bead of sealant (C237) to mating surface of floor panel, install floor panel.

10-128. FLAPPER VALVE PLATES.

10-129. Description — Flapper Valve Plates. Two plates installed on the baffle provide for mounting of the flapper valve and fuel fittings (figure 10-14).

10-130. Removal — Flapper Valve Plate. (Refer to items 11 and 12, figure 10-14). a. For access procedure (paragraph 10-124).

b. Disconnect hoses (6 and 20) from nipple (8).

c. Remove bolt (10), nut (15) and washer (14).

d. Remove flapper valve (paragraph 10-124).

10-131. Cleaning — Flapper Valve Plates. If corroded, clean corrosion from plates.

10-132. Inspection — Flapper Valve Plates. inspect plates (11 and 12) for cracks and warpage.

10-133. Repair or Replacement — Flapper Valve Plates. Replace plates if cracked or warped.

10-134. Installation — Flapper Valve Plates. a. Insert bolt (10) through plates (11 and 12).

b. Place washer (14) on bolt (10) and thread nut (15) on bolt. Tighten nut.

c. Connect hoses (6 and 20, figure 10-14).

d. Install flapper valve (16) (paragraph 10-127).

e. Install remaining components (paragraph 10-127).

10-135. FUEL CELL SUMP ASSEMBLY.

10-136. Description — Fuel Cell Sump Assembly. The fuel cell sump assemblies are mounted in openings on the underside of each forward fuel tank. Removal of the sump assemblies from the tanks permits access for maintenance and replacement of the boost pump, flow switch, check valve and cross fittings (figure 10-13).

a. Sump drain valve (28, figure 10-13) can be removed without removing fuel sump assembly.

b. Removing and installing are the same as cell drain valves (paragraph 10-29).

10-137. Removal — Fuel Cell Sump Assembly. a. Disconnect battery and any external power source. Defuel system.

b. Remove sump access panel from underside of cabin by removing screws. Mark access panel so it can be installed in same position.

c. Open sump drain valve (28, figure 10-13) to drain trapped fuel into suitable container.

d. Disconnect tubes and electrical leads of units attached to sump (27).

e. Remove screws, washers and retainers from sump plate. Lower sump assembly (27) and support it below mounting port. Reach through opening to disconnect hoses from boost pump (11) outlet, flow switch (33) outlet, and disconnect fuel quantity gage tank unit electrical leads as necessary.

f. Remove sump assembly (27). Remove packing seal from groove around cell opening. Cover opening immediately to prevent entry of foreign matter.

10-138. Removal — Sump Drain Valve, a. Defuel system.

b. Remove valve (28) and packing.

10-139. Inspection — Sump Drain Valve. Inspect valve for nicks, scratches, corrosion and leakage.

10-140. Replacement — Sump Drain Valve. If valve fails inspection requirements, replace valve.

10-141. Installation — Sump Drain Valve. a. Install drain valve (28, figure 10-13) with packing to sump opening.

b. Service fuel system and inspect valve for leakage.

10-142. Inspection — Fuel Cell Sump Assembly.

a. Inspect drain valve for leaking packing or seal washers (figure 10-12).

b. Inspect flow switch, flow switch gaskets, and packings for evidence of leakage.

c. Inspect fuel quantity indicating system electrical connectors on right sump for damage. Dome nut plates NAS1474A4 installed on fuel sumps 205-062-640-1 and -2 in lower left and right hand fuel tanks 205-062-635-1 and -2 may be installed with 1/8 inch rivets with O-ring NSN 5320-00-680-3396 if the regular 3/32 inch rivet holes have been elongated. The 3/32 inch holes may be drilled out to 1/8 inch in sumps and in the nut plates to accept the 1/8 inch rivets.

10-143. Repair or Replacement — Fuel Cell Sump Assembly. Replace components which show evidence of damage or have been found to be faulty during troubleshooting procedures.

10-144. Installation — Fuel Cell Sump Assembly.

a. Locate free ends of hoses which attach to boost pump and to flow switch inside fuel cell. Locate fuel quantity probe leads if a right fuel cell sump is being installed.

b. Install packing in groove around cell opening. Use a small amount of adhesive (C34) to hold packing in place.

c. Position clean, properly assembled sump assembly with boost pump (11, figure 10-12), flow switch (33), check valve (3), cross fitting (26), sump drain valve (28), and defuel valve (29) properly installed, slightly below opening. Reach inside and connect outlet hose to pump fitting. Connect outlet hose to flow switch (33) and cross fitting (26) and attach fuel quantity tank unit leads to connectors.

NOTE

If sump drain valve safety was removed, resafety valve.

d. Raise sump plate to normal position and secure with bolts and washers. Tighten bolts evenly **40 TO 50** inch pounds.

e. Connect external lines and electrical leads of pump and other units of sump assembly.

f. Check for leaks and for proper functioning of indicators when system is being refilled.

g. Reinstall access panel.

10-145. FLOW SWITCH.

10-146. Description — Flow Switch. The flow switch (33, figure 10-12) is attached to the sump plate on the underside of each forward fuel tank.

10-147. Removal — Flow Switch.

a. Remove sump assembly (paragraph 10-137).

b. Disconnected fuel line from check valve (3) and fuel line from outlet of flow switch (33).

c. Disconnect electrical terminals and cover ends with tape.

d. Cut lockwire and remove nut and washer securing flow switch (33) to sump plate; remove flow switch (33), and check valve (3) from sump plate.

e. Remove check valve (3) from flow switch (33).

f. Remove packing from flow switch electrical unit.

10-148. Repair or Replacement — Flow Switch.

a. Replace flow switch (33) if malfunctioning.

b. Replace packing with like serviceable item.

c. Position flow switch (33) and check valve (3) on sump plate with electrical inlet projecting through plate.

d. Install washer (22) on electrical outlet and secure flow switch to sump plate with nut (21) previously removed. Lockwire (C155) nut.

e. Connect electrical terminals.

f. Replace sump assembly (27).

10-150. CHECK VALVE.

10-151. Description — Check Valve. The check valve (3, figure 10-12) is installed in the inlet port of the flow switch (33).

10-152. Removal — Check Valve.

a. Remove sump assembly (paragraph 10-137).

b. Disconnect hose from inlet port of check valve (3).

c. Unscrew check valve (3) from inlet port of flow switch (33).

d. Remove packing (2) between flow switch (33) and check valve (3).

10-153. Repair or Replacement — Check Valve.

a. Replace check valve (3) if malfunctioning.

b. Replace packing (2) between flow switch (33) and check valve (3) with like serviceable item.

10-154. Installation — Check Valve.

a. Install new gasket between check valve (3, figure 10-12) and flow switch (33).

b. Install check valve (3) in inlet port of flow switch with direction of flow toward flow switch (33).

c. Connect hose to inlet port of check valve (3).

d. Replace sump assembly (paragraph 10-144).

10-155. Breakaway Valves, with shear pins.

a. Valves manufactured by Aeroequip Corporation (00624). Inspect for loose or missing shear pins in outer sleeve (figure 10-15) as follows:

(1) Remove coupling and inspect for wear on the break-away pins using a feeler gage as follows:

NOTE

When attempting to measure the gap do not rock coupling halves back and forth. Apply an even pressure so that a consistent reading is obtained.

(2) Apply pressure to the coupling halves as if to push them together. With the coupling halves fully compressed measure and record the breakaway joint gap at each (3) shear pin location.

(3) Apply opposite pressure to the coupling as if to pull them apart. With the coupling fully extended measure and record the breakaway joint gap at each shear pin location.

(4) If the difference of the two measurements is **0.085** inches or less, the coupling is serviceable. If the difference is greater than **0.085** at any of the three pin locations, or if any of the shear pins are missing, the coupling needs to be replaced.

10-155.1 Breakaway Valves — Aft Center Fuel Cell Interconnect.

NOTE

Only valves manufactured by Aeroquip Corporation are repairable. Valves manufactured by Wiggins, Inc. are not repairable.

a. Cut, remove and discard lockwire securing nut to adapter assembly.

b. Loosen nut on valve until it separates from adapter assembly.

c. Slowly pull the upper body assembly out of the adapter assembly to help prevent the possibility of losing the internal ring halves. The ring halves can quickly separate from the upper body assembly if the parts are separated quickly.

d. Remove and discard packing from upper body assembly.

e. Inspect valve for corrosion, damage and general serviceable condition.

f. If valve does not meet inspection requirements, replace valve.

g. Clean valve parts as necessary with cleaning solvent (C261).

h. Slide nut onto upper body assembly.

i. Install new packing (NSN 5330-00-113-5732 for P/N AE95270K) (NSN 5330-01-101-2035 for P/N 205-062-654-1) on upper body assembly.

j. Install both ring halves in ring groove on upper body assembly.

k. While holding both ring halves in place, slide upper body assembly into adapter assembly until it bottoms out in adapter assembly.

l. Tighten nut into adapter assembly.

m. Lockwire (C155) nut to adapter assembly.

10-156. AUXILIARY FUEL PROVISIONS.

Permanently installed provisions for use of auxiliary fuel tanks include drain, vent, and fuel transfer connections and a stowed transfer pump relay circuit, with two float switches in center aft fuel cell, to limit fuel level during transfer (figure 10-16).

Warning

When using the 300 Gallon Crashworthy fuel Cells the auxiliary fuel system Is not crashworthy unless the Crashworthy Auxiliary Fuel Cell Provisions are installed.

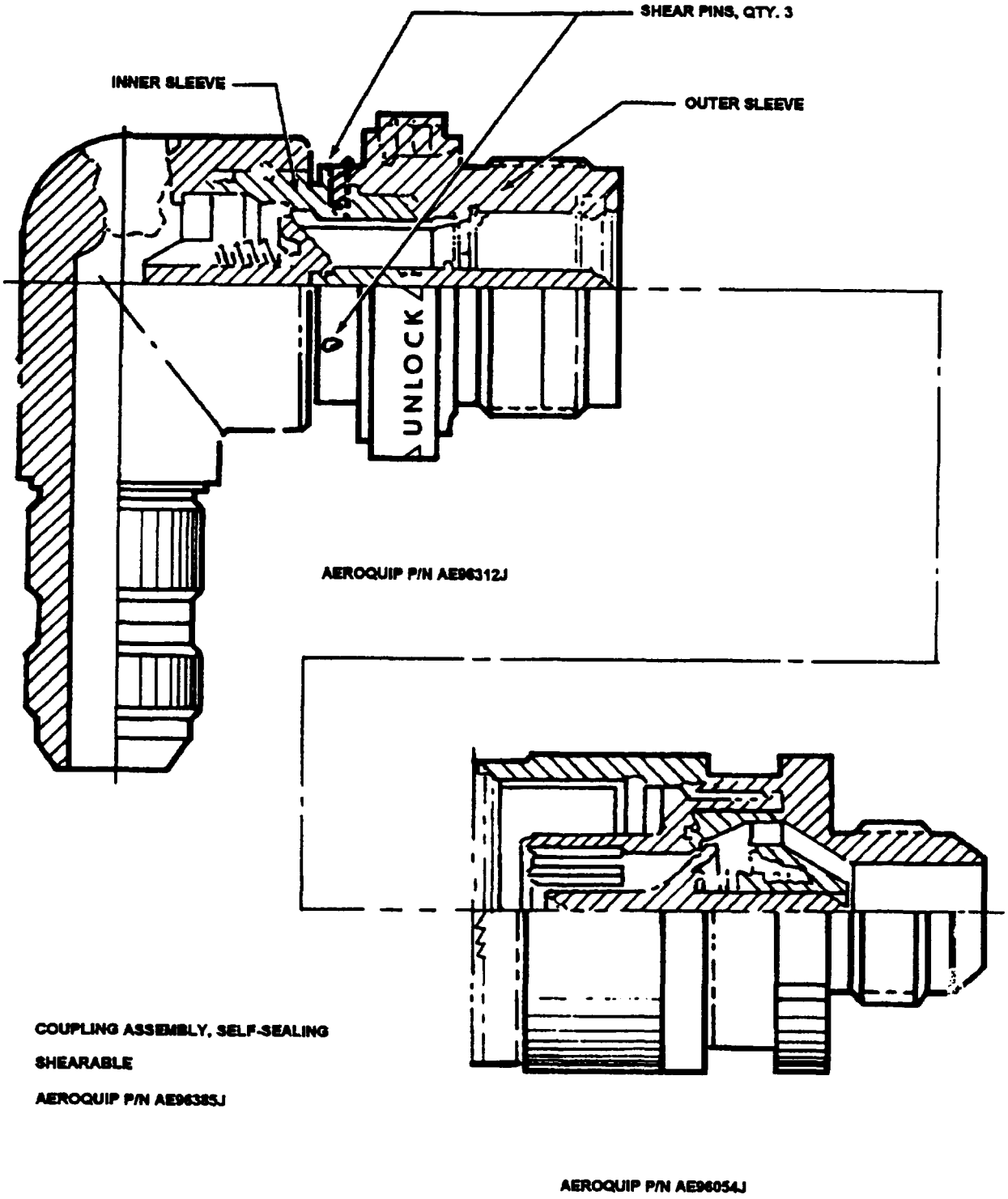

Figure 10-15. Coupling Assembly, Self-Sealing

Page 10-46, including Figure 10-15 (Sheet 2 of 2) has been deleted.

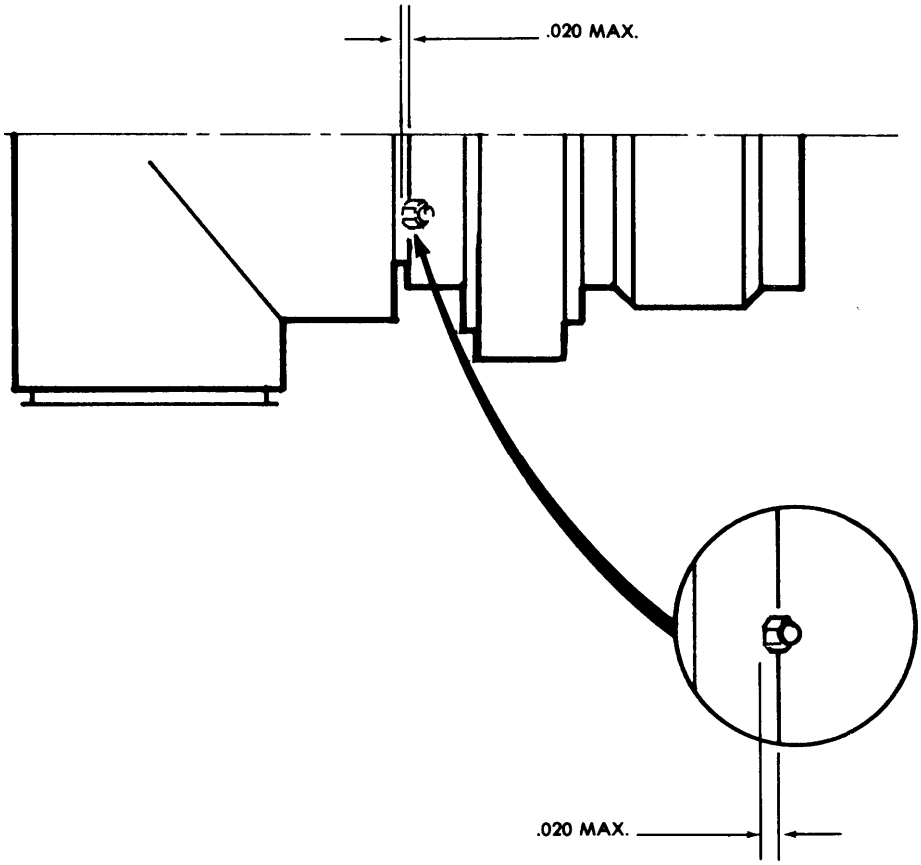

Figure 10-15. (Sheet 2 of 2)

Table 10-4. Troubleshooting — Auxiliary Fuel System

CONDITION

TEST OR INSPECTION

CORRECTIVE ACTION

1. No fuel transfer from one auxiliary fuel cell.

STEP 1. Check fuel discharge hose coupling for proper seating.

Connect coupling properly or replace coupling.

STEP 2. Ensure check valve (fuel discharge line) is operating correctly.

If check valve is defective, replace check valve. Do not attempt to clean and reuse check valve except in emergency conditions.

STEP 3. Check for defective fuel pump or fuel pump electrical circuit.

If electrical power is available at fuel pump, replace defective pump, otherwise check and repair defective wiring (paragraph F-11).

Table 10-4. Troubleshooting – Auxiliary Fuel System (Cont)

CONDITION

TEST OR INSPECTION

CORRECTIVE ACTION

2. No fuel transfer from either auxiliary fuel cell.

STEP 1. Check for faulty transfer relay.

Repair or replace transfer relay (paragraph 9-9).

STEP 2. Check for faulty float switch or electrical circuit.

Replace float switch or repair faulty circuit (paragraph F-11).

3. Fuel overflows main cell vents during fuel transfer.

Check upper float switch (aft center fuel cell) to ensure it is actuating transfer relay.

Replace upper float switch or transfer relay, as required (paragraph 10.6).

4. Auxiliary cell collapsing during fuel transfer.

STEP 1. Check for clogged vent valve or vent line.

Replace vent valve or clean vent line (paragraph 10-6).

STEP 2. Check for defective low level float switch or electrical circuit.

Replace defective switch or faulty wiring (paragraph F-11).

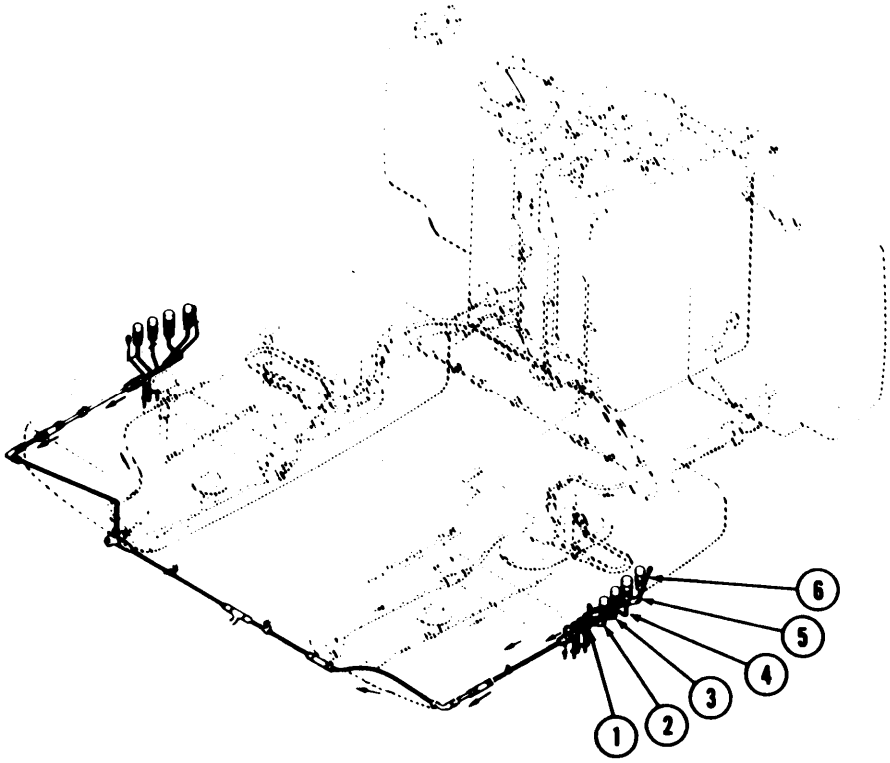

AUXILIARY INTERNAL FUEL TANK CONNECTIONS:

1. Scupper drain line
2. Pump seal drain line
3. Tank vent line
4. Fuel line
5. Tank drain line
6. Scupper drain line

Figure 10-16. Auxiliary Fuel Provisions

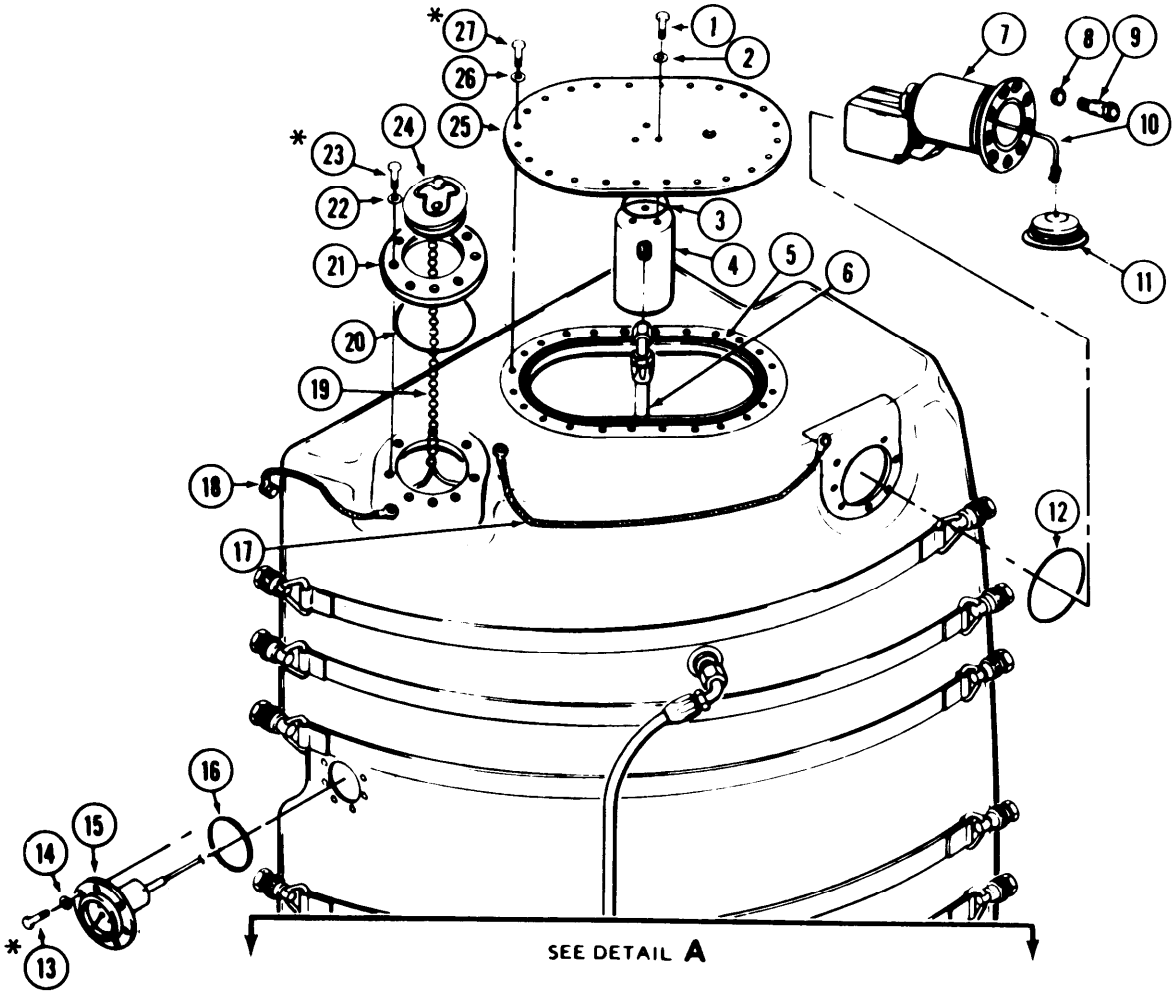

1. Bolt
2. Washer
3. Gasket
4. Shutoff Valve
5. Packing
6. Hose Assembly
7. Cap and Refuel Receiver Assembly
8. Washer
9. Bolt
10. Lanyard
11. Cap Assembly
12. Packing
13. Bolt
14. Washer
15. Fuel Gage
16. Packing
17. Jumper
18. Jumper
19. Lanyard
20. Packing
21. Adapter
22. Washer
23. Bolt
24. Cap Assembly
25. Cover Plate
26. Washer
27. Bolt

Figure 10-17. Auxiliary Fuel Cell — Crashworthy (Sheet 1 of 2)

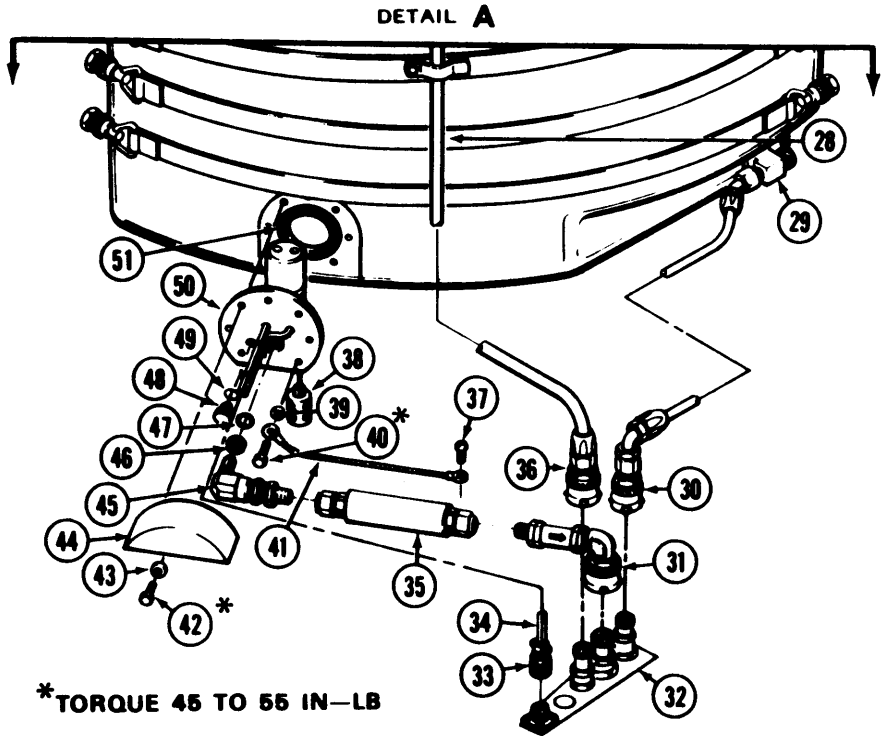

28. Hose assembly
29. Drain valve
30. Drain quick disconnect
31. Discharge quick disconnect
32. Existing provisions
33. Electrical quick disconnect
34. Electrical harness
36. Hose assambly
36. Vent quick disconnect
37. Existing screw
38. Low level float switch
39. Washer
40. Bolt
41. Jumper
42. Bolt
43. Washer
44. Cover
46. Valve
46. Nut
47. Packing
48. Plug
49. Packing
50. Pump assembly
51. Packing

Figure 10-17. Auxiliary Fuel Cell — Crashworthy (Sheet 2 of 2)

10-157. FUEL PUMP - AUXILIARY FUEL CELL.

10-158. Description - Fuel Pump - Auxiliary Fuel Cell. The electrically operated fuel pump is capable of pumping approximately 600 pounds of fuel per hour at sea level. The auxiliary fuel cell incorporates a float switch to give CAUTION panel (AUX FUEL LOW) indication to the pilot when fuel level is low.

10-159. Removal - Fuel Pump - Auxiliary Fuel Cell.

N O T E

Turn battery switch to OFF. Drain all fuel from cell.

a. Disconnect electrical connector and two fuel lines (fuel discharge and seal drain) at access port in cabin floor.

b. Remove seven bolts and washers holding fuel pump and holding-strap fittings to fuel cell.

c. Carefully withdraw pump and packing from fuel cell by pulling outward and upward on fuel pump base. Upward movement is required in order to clear pump body through opening in cell.

10-160. Installation-Fuel Pump-Auxiliary Fuel Cell. a. Install fuel pump and packing into cell with flat section of mounting flange down, using reverse procedure to that noted in step c. above.

b. Install seven bolts and washers, two passing through the fittings of cell holding strap.

c. Torque bolts **50 TO 70** inch-pounds.

d. Connect electrical connector and two fuel lines in access port in cabin floor.

e. Check installation for leaks.

10-161. FUEL SYSTEM - 300 GALLON AUXILIARY-CRASHWORTHY.

WARNING

This system is not considered crashworthy unless MWO 55-1520-210-30/42, Crashworthy Auxiliary Fuel Tank Provisions, has been installed. The indication that the MWO has been installed is that the external fuel cell couplings have been removed.

10-162. Description - Fuel System -300 Gallon Auxiliary - Crashworthy. The crashworthy system incorporates a float type fuel guage and a closed circuit refueling receiver. Repair crashworthy fuel cells in accordance with paragraph 10-6,

10-163. Removal - Fuel Cell-300 Gallon Auxiliary.

N O T E

Drain fuel from auxiliary cells before removing the fuel cells.

a. Disconnect four fuel lines (fuel discharge, cell vent, seal drain, and cell drain) and electrical connector at cabin floor.

b. Install protective devices, over ends of all lines and plugs, under deck and on cell.

c. Install cover plate over fuel line access hole on cabin floor.

d. Disconnect auxiliary cell holding straps from studs (18 points) at aft cabin bulkhead and transmission support structure.

e. Unhook two nylon cord loops on top of cell.

f. Carefully remove cell from helicopter.

N O T E

For repair, handling, and storage instructions of fuel cell, refer to TM 55-1500-204-25/1.

g. If auxiliary cell is to remain out of the helicopter, remove all fuel cell equipment kit items from aft cabin bulkhead and transmission support structure and place in storage compartment in doorpost. Reinstall all troop seats and litter fittings along sides of aft cabin bulkhead and transmission support structure.

10-164. Inspection - Fuel Cell -300 Gallon Auxiliary. Inspect fuel cell for cuts, tears and damage.

10-165. Repair or Replacement- Fuel Cell -300 Gallon Auxiliary. Refer paragraph 10-6 for fuel cell repair procedures.

10-166. Installation - Fuel Cell -300 Gallon Auxiliary. a. If installed, remove troop seats and litter fittings from aft cabin bulkhead and sides of transmission support structure.

b. Remove auxiliary fuel cell equipment kit items from stowage in doorpost. Install 18 studs and washers into cap plates nuts on aft cabin bulkhead and transmission support structure. Torque studs **50 TO 70** inch-pounds.

NOTE

The long stud is used in third plate nut from bottom of transmission support structure.

c. Install spacer, hook, washer, and bolt into plate nut at top of transmission support structure. Install like items in plate nut at top of aft cabin bulkhead. Torque bolts **50 TO 70** inch-pounds.

d. Carefully lift cell into helicopter.

e. Thread (0.187 inch) nylon cord through two aft cell hangers and through hook on upper transmission support structure. Tighten and tie cord in such a manner as to retain fuel cell to support structure. Repeat process to secure forward end of fuel cell to aft cabin bulkhead, using cord through delta ring hanger and hook on cabin bulkhead.

f. Snap cell-holding straps to studs on aft cabin bulkhead and transmission support structure.

g. Remove cover over fuel lines access on top of cabin floor; remove caps from all lines and plugs.

h. Connect electrical connector and four lines from cell.

i. It will be necessary to check transmission oil level by use of mirror when auxiliary fuel cell is installed.

10.167. FUEL GUAGE — AUXILIARY FUEL CELL — CRASHWORTHY.

10-168. Removal — Fuel Gage — Auxiliary Fuel Cell — Crashworthy.

NOTE

Turn battery switch to OFF. Drain all fuel from cell.

a. Remove bolts (13, figure 10-17) and washers (14).

b. Remove fuel gage (15) from fuel cell and remove packing (16) from fuel gage.

10-169. Replacement — Fuel Gage — Auxiliary Fuel Cell — Crashworthy. Replace fuel gage (15, figure 10-17) if unserviceable.

10-170. Installation — Fuel Gage — Auxiliary Fuel Cell — Crashworthy. a. Place packing (16, figure 10-17) on back of gage (15).

b. Place guage (15) over hole in fuel cell, align mounting holes

c. Secure guage (15) to cell with washers (14) and bolts (13), finger tight. Torque bolts (13) **45 To 55** inch pounds

10-171. FILL CAP — AUXILIARY FUEL CELL — CRASHWORTHY.

10-172. Removal — Filler Cap — Auxiliary Fuel Cell — Crashworthy.

NOTE

Turn battery switch to OFF. Drain all fuel from cell.

a. Remove bolts (23, figure 10-17) and washers (22) from adapter (21).

b. Remove jumper (18) from adapter (21)

c. Lift adapter (21) from fuel cell and remove lanyard (19) from cell.

d. Remove cap assembly (24) and packing (20) from adapter (21)

10-173. Replacement — Filler Cap — Auxiliary Fuel Cell — Crashworthy.

a. Replace filler cap assembly (24, figure 10-17) if unserviceable.

10-174. Installation — Filler Cap — Auxiliary Fuel Cell — Crashworthy. a. Place packing (20, figure 10-17) on adapter (21).

b. Place end of lanyard (19) into fuel cell

c. Place adapter (21) on fuel cell and align mounting holes

d. Secure adapter (21) and jumper (18) to fuel cell with washers (22) and bolts (23). Torque bolts (23) **23 To 55** inch pounds

WARNING

Failure to install required jumper (18) could result in a potential fire hazard.

218-260 0- 88 - 11

NOTE

Place jumper (18) under head of nearest bolt (23).

10-175. SHUTOFF VALVE — AUXILIARY FUEL CELL — CRASHWORTHY.

10-176. Removal — Shutoff Valve — Auxiliary Fuel Cell — Crashworthy.

NOTE

Turn battery switch to OFF. Drain all fuel from cell.

a. Remove bolts (27, figure 10-17) washers (26) from cover plate (25) on top of fuel cell.

b. Lift cover plate (26) from fuel cell and disconnect hose assembly (6) from shutoff valve (4).

c. Remove cover plate (25), shutoff valve (4) and packing (5) from cell. Tie hose assembly (6) to top of cell

NOTE

Cover opening in cell to avoid contamination.

d. Remove bolts (1) and washers (2) from top center of cover plate (25) while holding shutoff valve (4)

e. Remove shutoff valve (4) and gasket (3) from cover plate (25),

10-177. Replacement — Shutoff Valve — Auxiliary Fuel Cell — Crashworthy. Replace shutoff valve (4, figure 10-17) if unserviceable.

10-178. Installation — Shutoff Valve — Auxiliary Fuel Cell — Crashworthy. a. Place gasket (3, figure 10-17) and shutoff valve (4) on bottom of cover plate (25) with hose connection pointing outboard and mounting holes aligned.

b. Secure shutoff valve (4) to cover plate (25) with bolts (1) and washers (2). Tighten bolts

c. Place packing (5) in groove around cell opening.

d. Lower shutoff valve (4) enough to allow hose assembly (6) to be connected to the shutoff valve (4)

e. Place cover plate (25) over cell opening and aligm mounting holes

f. Secure cover plate (25) with washers (26) and bolts (27) Torque bolts (27) **45 TO 55** inch pounds,

10-179. REFUEL RECEIVER — AUXILIARY FUEL CELL — CRASHWORTHY.

10-180. Removal — Refuel Receiver — Auxiliary Fuel Cell — Crashworthy.

NOTE

Turn battery switch to OFF. Drain all fuel from cell.

a. Remove bolts (9, figure 10-17) and washers (8) from refuel receiver (27). Place jumper (17) away from refuel receiver (7).

b. Remove refuel receiver (7) from fuel cell and packing (12) from refuel receiver (7)

c. Remove cap assembly (11) from refuel receiver (7) by lifting flap and turning cap counterclockwise. Open retaining pin on lanyard (10) and remove cap

10-181. Replacement — Refuel Receiver — Auxiliary Fuel Cell — Crashworthy. Replace cap assembly (11, figure 10-17) if unserviceable. If refuel receiver (7) is unserviceable replace refuel receiver (7).

10-182. Installation — Refuel Receiver — Auxiliary Fuel Cell — Crashworthy.

a. Place refuel receiver (7) in fuel cell, align bolt holes, place jumper (17) under nearest bolt and secure refuel receiver (7) to fuel cell with bolts (9) and washers (8) Torque bolts (9) **45 TO 55** inch pounds

WARNING

Failure to install required jumper (17) could result in a potential firehazard.

b. Connect cap assembly (11) to lanyard (10) with retaining pin.

c. Place cap (11) over refuel receiver (7) opening, rotating clockwise and closing flap

10-183. PUMP ASSEMBLY — AUXILIARY FUEL CELL — CRASHWORTHY.

10-184. Removal – Pump Assembly — Auxiliary Fuel Cell — Crashworthy.

NOTE

Turn battery switch to OFF. Drain all fuel from cell.

a. Remove hose assembly (35, figure 10-17) from valve (45) on pump assembly (50).

b. Disconnect electrical harness (34) at electrical quick disconnect (33) on existing provisions panel (32)

c. Removal bolt (40), jumper (41) and washer (39) from pump assembly (50) Remove remaining bolts (42) and washers (43) from pump assembly. Remove cover (44)

CAUTION

Pump assembly (50) must be removed from fuel cell with care to avoid damage to pump and float switch (38).

d. Remove pump assembly (50) by pulling out, tilting pump forward and with a down and outward movement allow pump to clear the fuel cell opening

e. Remove packing (51) from fuel cell

f. Remove valve (45), nut (46) and packing (47) from pump assembly (50)

10-185. Replacement — Pump Assembly — Auxiliary Fuel Cell — Crashworthy.

Replace pump assembly (50, figure 10-17) if unserviceable.

10-186. Installation — Pump Assembly — Auxiliary Fuel Cell — Crashworthy.

a. Place packing (47) in pump assembly (50) discharge port. Run nut (46) up on valve (45). Screw valve (45) into pump assembly (50) discharge port and secure with nut (46).

b. Place packing (51) in groove on fuel cell. Tilt pump assembly (50), push up and in until pump assembly is seated and bolt holes are aligned.

c. Place cover (43) over top holes and secure pump assembly (50) and cover (44) with bolts (42) and washers (43). Install bolts at lower left hole and go clockwise.

d. Secure jumper (41) to pump assembly (50) with washers (39) and bolt (40). Torque bolts (40 and 42) **45 TO 55** inch pounds.

WARNING

Failure to install required jumper (41) could result in a potential fire hazard.

e. Connect hose assembly (35) to valve (45) and electrical harness (34) by electrical quick disconnect (33) at panel (32).

CHAPTER 11

FLIGHT CONTROLS

SECTION I. CONTROL SURFACES

(Not Applicable)

SECTION II. FLIGHT CONTROL COMPONENTS

11-1. FLIGHT CONTROL SYSTEM.

11-2. Description– Flight Control System. The flight control system consists of the collective pitch control system, cyclic control system (pitch and roll), elevator control system and tail rotor (directional) control system. The flight control systems are mechanical linkages, actuated by conventional controls, and are used to control flight attitude and direction.

The flight control systems are a straight through system with hydraulic boost. A synchronized elevator is linked into the fore and aft control system at the swashplate. Electrically operated force trims, connected to cyclic and tail rotor controls, induce artificial feel and stabilize control stick and tail rotor control pedals.

11-3. Troubleshooting - Flight Control System. Perform troubleshooting of the light control system in accordance with Table 11-1.

CAUTION

Use of hydraulic ground test equipment, with any flight control tube disconnected, may result in damage to swashplate, scissors and sleeve assemblies.

N O T E

Before using table 11-1, ensure all normal operational checks have been performed.

N O T E

Isolate potential problem areas by disconnecting the pilots stick or pedals and the hydraulic actuators from the interconnecting linkage prior to troubleshooting.

Table 11-1. Troubleshooting Flight Control System

CONDITION

TEST OR INSPECTION

CORRECTIVE ACTION

a. Cyclic System

1. Cyclic stick rough or binding.

STEP 1. Check for dirt or foreign material at base of stick.

Remove boot and clean as required (paragraphs 11-59 and 11-61).

Table 11-1. Troubleshooting Flight Control System (Cont)

CONDITION

TEST OR INSPECTION

CORRECTIVE ACTION

STEP 2. Check for interference in control linkage.

Adjust or repair as necessary (paragraph 11-67).

STEP 3. Check for bent control tubes.

Replace rods as necessary (paragraph 11-67).

STEP 4. Check for dry or seized bearings.

Replace bearings as necessary (paragraph 11-185).

STEP 5. Check for binding, loose or torn boots.

Adjust or replace boot (paragraphs 11-59 and 11-61).

STEP 6. Check force gradient assemblies and magnetic brakes for binding.

Adjust or repair force gradient assemblies (paragraph 11-82 through 11-85).

Adjust or repair magnetic brakes (paragraph 11-78).

2. Helicopter drifts to right or left.

Check swashplate for proper rigging.

Rig swashplate (paragraph 11-55).

3. Uneven cyclic application force (boost off).

Check for missing or out of adjustment swashplate balance spring (right forward arm).

Adjust or replace and adjust spring (paragraph 11-55).

4. Insufficient stick travel,

STEP 1. Check for interference in stick base or control linkage.

Repair linkage as necessary (paragraph 11-67).

STEP 2. Check for proper rigging.

Rig as required (paragraph 11-55).

Table 11-1. Troubleshooting Flight Control System (Cont)

CONDITION

TEST OR INSPECTION

CORRECTIVE ACTION

5. Pilot and copilot's sticks out of synchronization.

Check for correct rigging of interconnecting linkage.

Rig adjustable tubes as necessary (paragraph 11-55).

b. Collective System

1. Collective stick light or heavy.

STEP 1. Check minimum friction adjustment of collective stick.

Adjust friction as necessary (paragraph 11-27).

STEP 2. Check for dirt, oil, or grease on friction surface.

Remove boot and check friction surfaces. Clean and adjust as necessary (paragraphs 11-27).

STEP 3. Check control linkage and supports for looseness and damage.

Replace linkage as necessary (paragraphs 11-10, 11-11).

STEP 4. Check balance spring on hydraulic actuator servo for out of adjustment or missing.

Adjust spring as required (paragraph 7-82).

2. High vertical vibration level.

STEP 1. Check minimum friction nut adjustment (causes pilot induced vibration).

Adjust friction as necessary (paragraph 11-27).

STEP 2. Check control linkage and supports for looseness and damage.

Replace linkage as necessary (paragraphs 11-10, 11-11).

3. Insufficient collective travel.

STEP 1. Check for interference in control linkage.

Replace linkage as necessary (paragraphs 11-10, 11-11).

Table 11-1. Troubleshooting Flight Control System (Cont)

CONDITION

TEST OR INSPECTION

CORRECTIVE ACTION

STEP 2. Check linkage for correct rigging,

Rig as necessary (paragraph 11-6).

4. Binding or rough operation.

STEP 1. Check for interference in control linkage.

Replace linkage as necessary (paragraphs 11-10 and 11-11).

STEP 2. Check for bent control rods.

Replace rods as necessary (paragraphs 11-10 and 11-11).

STEP 3. Check for dry or seized bearings.

Replace bearings as necessary (paragraph 11-185).

STEP 4. Check for binding, torn, or loose boot.

Align or replace boots (paragraphs 11-10 and 11-11).

STEP 5. Check for dirt or foreign matter at base of stick.

Remove boot clean as necessary (paragraphs 11-10 and 11-11).

5. Motoring collective stick (stick is driven from position by feedback from main rotor)

STEP 1. Check minimum friction adjustment.

Adjust friction as necessary (paragraph 11-27).

STEP 2. Check balance spring on hydraulic actuator servo for out of adjustment or missing.

Replace or adjust spring as required (paragraph 7-82).

c. Elevator Control System

1. Elevator loose when cyclic stick is in neutral.

Check for broken or disconnected linkage.

Repair control linkage as necessary (paragraphs 11-176 and 11-177). Adjust linkage as necessary (paragraph 11-172).

Table 11-1. Troubleshooting Flight Control System (Cont)

CONDITION

TEST OR INSPECTION

CORRECTIVE ACTION

2. Elevator loose only when cyclic stick is in forward or aft position.

STEP 1. Check for loose, worn, or damaged linkage supports.

Repair linkage system as necessary (paragraph 11-176).

STEP 2. Check for worn bearings.

Replace bearings as necessary (paragraph 11-185).

3. Elevator position does not correspond to cyclic stick position.

STEP 1. Check for bent control rods.

Repair control rods as necessary (paragraphs 11-176 and 11-177). Adjust linkage as necessary (paragraph 11-172).

STEP 2. Check for correct rigging of controls.

Rig as necessary (paragraph 11-172).

4. Elevator binds or operates rough.

STEP 1. Check for seized bearings.

Replace as necessary (paragraph 11-185).

STEP 2. Check bearing preload.

Adjust as necessary (paragraph 2-293).

d. Tail Rotor Controls

1. Tail rotor pedal adjustment rough or binding.

STEP 1. Check for dirt or foreign material in pedal adjustment linkage.

Clean linkage as necessary. Adjust as required (paragraph 11-110).

2. Tail rotor controls rough or binding.

STEP 1. Check for interference in control linkage.

Check linkage between pedals and power cylinder (figure 11-24) for any Interference over the full travel range. Adjust as required (paragraphs 11-109 and 11-110).

Table 11-1. Troubleshooting Flight Control System (Cont)

CONDITION

TEST OR INSPECTION

CORRECTIVE ACTION

STEP 2. Check for bent control rods.

Replace damaged tubes as required (paragraph 11-163).

STEP 3. Check for dry or seized bearings.

Replace bearings as required (paragraph 11-185).

STEP 4. Check force gradient and magnetic brake for binding.

Adjust as required (paragraph 11-111 for magnetic brake or paragraph 11-113 for force gradient assembly).

3. Pilots and copilots pedal out of synchronization.

Check interconnecting pushrod (adjustable) for correct rigging,

Rig control linkage as required (paragraph 11 -110).

4. Insufficient pedal travel.

Check for any interference in control linkage.

Rig as required (paragraph 11-111 for magnetic brake or paragraph 11-113 for force gradient assembly).

5. Controls binding (hydraulic power off).

Check chain and sprocket.

Replace chain or sprocket as necessary (paragraph 11-149).

11-4. COLLECTIVE CONTROL SYSTEM.

11-5. Description - Collective Control System. The collective control system (figure 11-1) consists of a jackshaft assembly with dual control sticks, push-pull tubes and bellcranks, and a hydraulic actuator connetted to a collective lever on swashplate assembly. Movement of either control stick is transmitted through linkage and hydraulic actuator to main rotor pitch control mechanism, causing helicopter to ascend or descend or to remain at constant altitude.

The collective hydraulic actuator has an irreversible valve to reduce feedback forces.

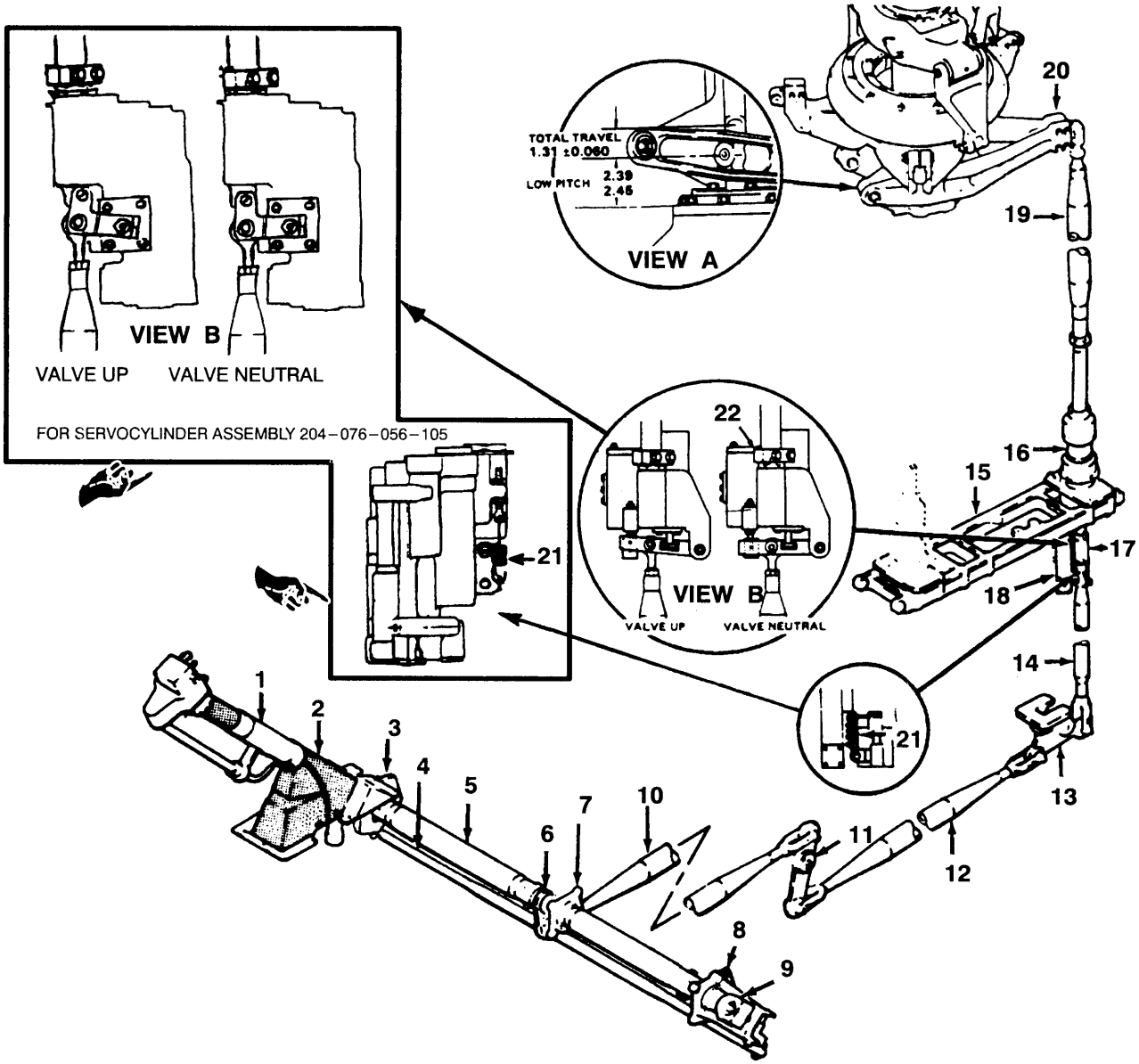

1. Pilots collective stick
2. Boot
3. Control
4. Power control (throttle) interconnect tube
5. Jackshaft assembly
6. Control arm
7. Bearing and housing
8. Control assembly
9. Elbow
10. Control tube
11. Lever
12. Control tube
13. Bellcrank
14. Control tube
15. Support
16. Hydraulic actuator
17. Servo valve
18. Irreversible valve
19. Actuator tube
20. Collective sleeve lever
21. Spring
22. Stop

Figure 11 – 1. Collective Control System.

11-6. Rigging - Collective Control System.

a. Rig system with control sticks, jackshaft assembly and all nonadjustable control tubes and bellcranks installed and connected.

NOTE

Check that stop (22, figure 11-1, view B) is firmly against nut.

b. Place collective control stick full UP against stop and secure with friction adjustment knob.

c. Adjust control tube (14) to fit attachment point on lever of servo valve (17), with hydraulic actuator (16) bottomed full up and control valve lever at top of travel (view B). Shorten tube by one-half to five turns of rod end and attach to valve lever with bolt, washers and nut Torque nut to 25 inch-pounds maximum (bolt must turn freely) and install cotter pin, no clamp-up allowed.

CAUTION

A measurement other than the Low Pitch dimensions (view A, figure 11-1) may cause engine RPM to build greater than 6600 + 40 from full Low Pitch to full Power.

d. Place collective control stick full DOWN against stop. Position collective sleeve lever (20) to obtain dimension of 2.39 TO 2.45 inches from center of cam roller to transmission cap plate surface (view A).

e. Position control valve in neutral (view B). Use auxiliary hydraulic power if available. Adjust clevis on actuator tube (19) to fit trunnion on collective sleeve lever and connect. Torque jamnut and seal area (figure 7-12). Lockwire (C155) nut.

f. Check for free travel of collective controls with hydraulic boost pressure off. Insure collective levers do not bottom on swashplate assembly attaching bolts. If levers do make contact, inspect for damage (figure 5-41) and reran system, paragraph 11-6a thru e.

g. Apply hydraulic boost pressure and check for 1.31 inches total travel of collective pitch sleeve (view A).

h. Check main rotor minimum pitch angle (paragraph 5-13,0).

i. Inspect complete collective control system for security of parts.

11-7. COLLECTIVE JACKSHAFT.

11-8. Description - Collective Jackshaft. A collective jackshaft, mounted laterally under cabin floor, provides mounting for the collective stick assemblies and attachment of collective control tube. The jackshaft is mounted on structural members by two housing assemblies and a support (figure 11-2).

11-9. Adjustment - Collective Jackshaft (installed).

NOTE

Adjustment of collective minimum friction Is contained In paragraph 11-27. 11-10. Inspection - Collective Jackshaft (Installed).

a. Inspect jackshaft for free travel and excessive lateral looseness. Minimum chuck is 0.005 inch.

b. Inspect jackshaft for loose, missing or improperly installed hardware.

c. Inspect bolt and bushing installations for enlarged holes and looseness of bolt and bushing.

d. Inspect jackshaft for external surface corrosion.

11-11. Removal - Collective Jackshaft.

CAUTION

Take precautions against damage by accidental movement of linkage while Jackshaft is disconnected.

a. Remove pilots and copilots seats (paragraph 2-218 or 2-249).

b. Remove boot (42, figure 11-2) from pilots collective control stick (34) (detail A, sheet 2).

c. Disconnect electrical connector from pilots collective stick.

d. Disconnect control tube (46) from gear lever on lower end of pilots collective stick by removing cotter pin (43), nut (44), washers (45), and bolt (47). Disconnect control tube (22) from both levers by removing nuts (17 and 26), washers (2 and 18), and bolts (1 and 19). Disconnect control tube (10) by removing cotter pin (11), nut (12), washers (9), bolt (8). Disconnect jackshaft tube (20) by removing nuts (21 and 25), washers (2 and 15), tapered bushings (4 and 16), and bolts (3 and 14).

e. Remove nuts (37 and 39), washers (36 and 40), screws (41), and bolts (35) attaching housing assembly (38) to structural intercostal. Remove pilots collective stick (34) and housing assembly (38) (detail B, sheet 2).

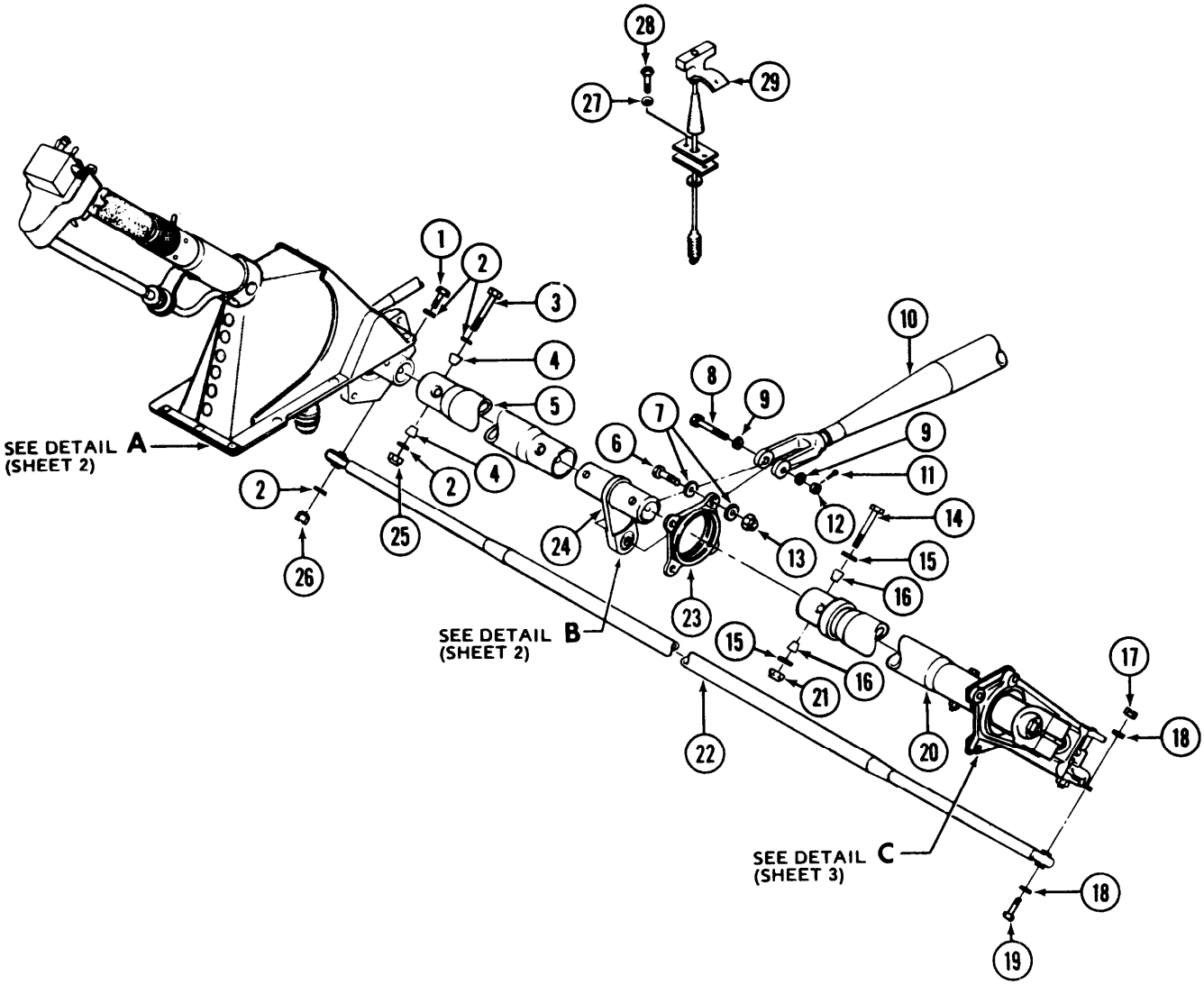

1. Bolt
2. Washer
3. Bolt
4. Tapered bushing
5. Jackshaft tube
6. Bolt
7. Washer
8. Bolt
9. Washer
10. Control tube
11. Cotter pin
12. Nut
13. Nut
14. Bolt
15. Washer
16. Tapered bushing
17. Nut
18. Washer
19. Bolt
20. Jackshaft tube
21. Nut
22. Tube assembly
23. Support
24. Arm
25. Nut
26. Nut
27. Washer
28. Screw
29. Downlock assembly

Figure 11-2. Collective Jackshaft (Sheet 1 of 3)

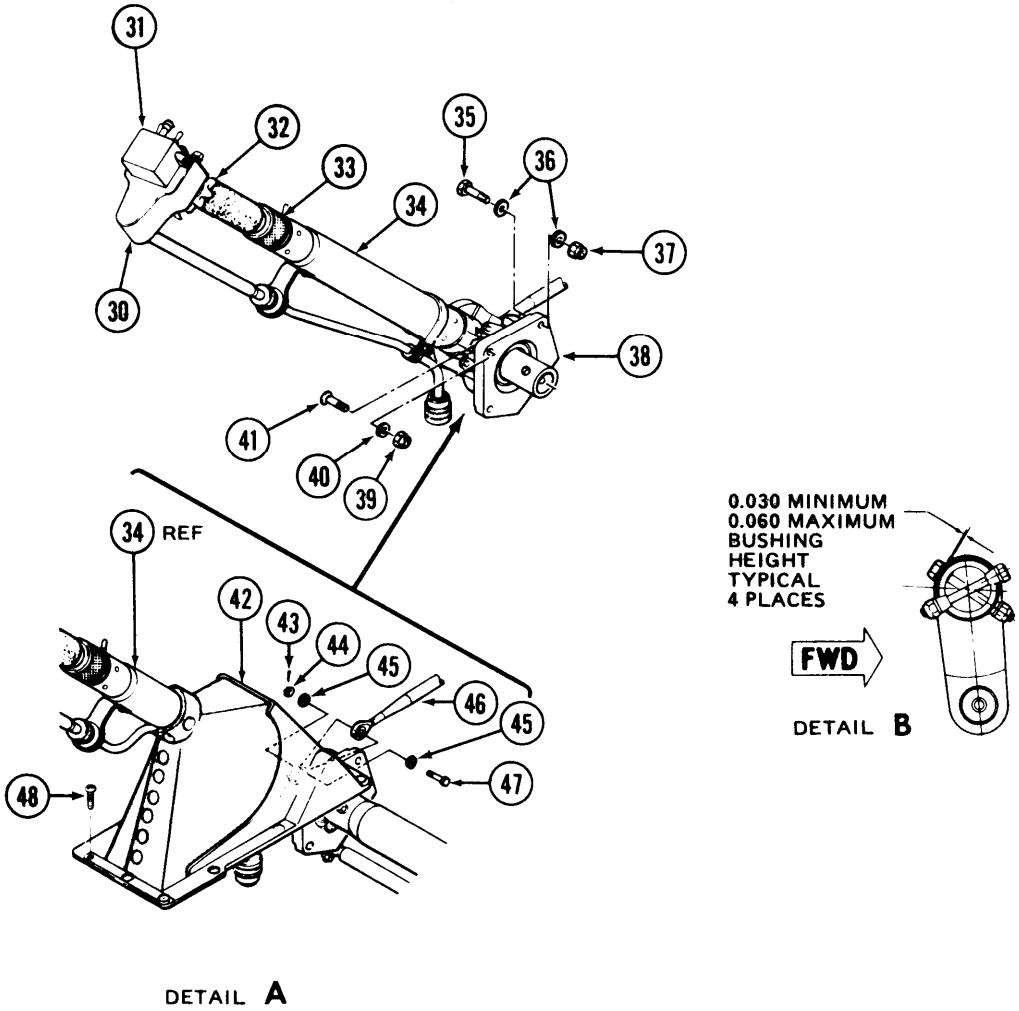

30. Switch box
31. Cover
32. Throttle friction knob
33. Collective friction knob
34. Pilots collective stick
35. Bolt
36. Washer
37. Nut
38. Housing assembly
39. Nut
40. Washer
41. Screw
42. Boot
43. Cotter pin
44. Nut
45. Washer
46. Control tube
47. Bolt
48. Straw

Figure 11-2. Collective Jackshaft (Sheet 2 of 3)

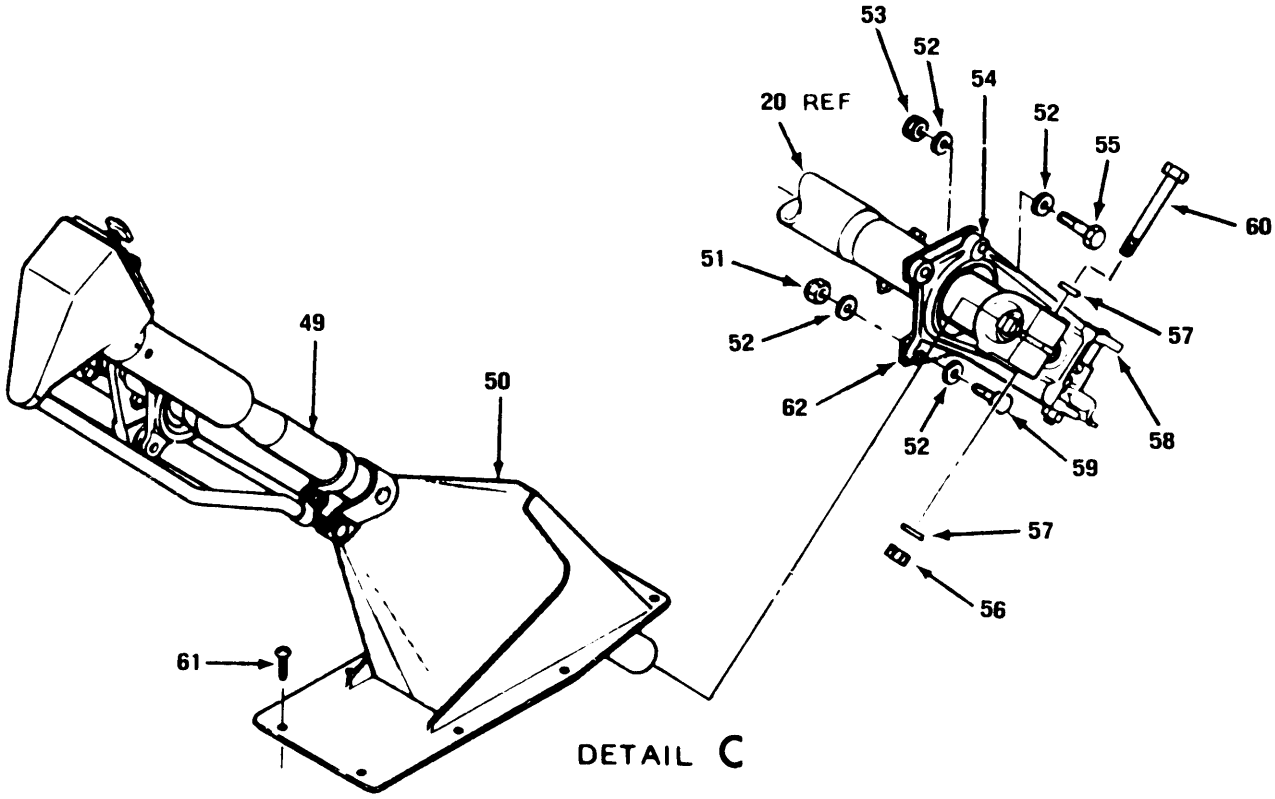

49. Co-pilots collective stick
50. Boot
51. Nut
52. Washer
53. Nut
54. Housing assembly
55. Bolt
56. Nut
57. Washer
58. Control assembly
59. Bolt
60. Bolt
61. Screw
62. Shim

Figure 11-2. Collective Jackshaft (Sheet 3 of 3)

f. Remove copilots collective stick (49, detail C, figure 11-2) as follows:

(1) Remove access panel from floor.

(2) Remove housing (54) from intercostal structure (detail C, sheet 3) by removing nuts (51 and 53), washers (52), shim (62), and bolts (55 and 59).

(3) Remove bolts (60), washers (57) and nuts (56).

(4) Remove copilots stick (paragraph 11-28).

g. Remove collective jackshaft tube as follows:

(1) Disconnect control tube (10) from arm (24) on jackshaft by removing cotter pin (11, nut (12), washers (9), and bolt (8).

(2) Remove nuts (51 and 53), washers (52), bolts (55 and 59), and shim (62) attaching housing (54) to intercostal structural member (detail C, sheet 2).

(3) Remove nuts (21), washers (15), four tapered bushings (16), and bolts (14) attaching jackshaft tubes (5 and 20) to arm (24). Identify bolts and bushings for reinstallation in same location. Remove jackshaft tube (20) from left side of helicopter with control assembly (58).

(4) Remove nuts (25), washers (2), tapered bushings (4), and bolts (3) attaching jackshaft tube (5) to housing assembly (38, detail A). Identify bolts and bushings for reinstallation in same location. Remove jackshaft tube (5).

(5) Remove nuts (13), washers (7), and bolts (6) and remove support assembly (23).

11-12. Disassembly — Collective Jackshaft (AVIM). a. Remove control assembly (58, figure 11-2) if not previously removed by removing bolts (55 and 59), washers (52) and nuts (51 and 53) attaching control assembly to jackshaft tube (20).

b. Remove lever arm (24) (if not previously removed) from jackshaft tube (5) by removing bolts (3), washers (2), bushings (4), and nuts (25) attaching lever arm (24) to jackshaft tube (5).

11-13 Inspection – Collective Jackshaft. a. Inspect jackshaft details for corrosion and mechanical damage.

N O T E

If alignment of holes in pilots collective stick elbow P/N 204-001-194-3 and jackshaft tube P/N 204-001-109-1 cannot be obtained by reaming to accept oversized tapered bushing, replace jackshaft tube.

11-14. Repair or Replacement – Collective Jackshaft (AVIM). a. Repair components of jackshaft as follows

(1) Polish out scratches (maximum 0.010 inch depth) using 600 grit sandpaper (C234). Obtain a smooth scratch free surface

(2) Treat repaired areas using chemical film (C62).

(3) Apply two coats zinc chromate primer (C312) or polyamide primer (C206) to repaired area.

11-15. Assembly – Collective Jackshaft (AVIM). a. Assemble details as shown in figure 11-3

b. Clamp in a suitable fixture, holding dimensions shown

c. Drill through tube and detail being replaced using a No. F **(0.257 inch)** drill

d. Insert reamer, (187) so that end of pilot projects through parts to be reamed.

e. Ream one side (smooth finish)

f. Install tapered bushing in reamed hole

g. Ream opposite hole using the tapered bushing to support reamer pilot

h. Install tapered bushings and secure with bolt, washer and nut.

i. Repeat steps c through h for the remaining holes.

j. Disassemble, remove burrs and metal particles.

k. Apply primer (C312) or polyamide primer (C206) to all bare metal.

11-16. Installation – Collective Jackshaft.

NOTE

If collective sticks and jackshaft are in one assembly; remove bolts and bushings from jackshaft tubes (5 and 20, figure 11-2).

a. Apply a coat of primer (C312) or polyamide primer (C206) to mounting faces of housing assembly (38 and 54, figure 11-2), and support assembly (23).

b. Lower pilots control stick through floor opening and insert elbow through mounting hole of structural intercostal. Attach housing assembly (38) to intercostal with screws (41), bolts (35), washers (36 and 40), and nuts (37 and 39). Torque nuts **50 TO 70** inch-pounds

c. Install tube (5) to housing assembly (38). Secure with tapered bushings (4), nuts (25), washers (2), and bolts (3) Torque nuts **50 TO 70** inch-pounds. See detail B for correct tapered bushing installation.

d. Install arm (24) to jackshaft tube (5) with bolts, tapered bushings, washers, and nuts as in step c. Torque nuts **50 TO 70** Inch-pounds

e. Position support (23) on left side beam at B.L. 14.00. Secure with bolts (6), washers (7), and nuts (13) Torque nuts **50 TO 70** Inch-pounds

f. Install jackshaft tube (20) and housing assembly (54) from left side. Place shim (62) between housing assembly (54) and support structure. Install bolts (55 and 59), washers (52), and nuts (51 and 53) to secure housing assembly (54) to support structure. Torque nuts **50 TO 70** Inch-pounds

g. Install bolts (14), tapered bushings (16), washers (15), and nuts (21) in jackshaft tube (20) and arm (24). Torque nuts **50 TO 70** inch-pounds. See detail B for correct tapered bushing Installation

h. Check lateral alignment of universal in housing assembly (54) and remove or add shims (62) to provide minimum lateral deflection

i. Align levers on axis of each housing assembly. Install control tube (22). Install bolt (19) on left end (copilots) with head down. Install bolt (1) on right side (pilots) with head up. Place one washer (2) under bolt heads and one washer under nuts (17) and 26). Torque nuts **20 TO 25** inch-pounds and install cotter pins.

VIEW A-A

1. Drill four no. F (0.25 inch) holes in line.
   Taper ream (T87) holes, 125 finish.
   Install
   Tapered bushing (79B1-4-7 or 20-037-4-7) (4 reqd)
   Bolt (2 reqd)
   Washer (4 reqd)
   Nut (2 reqd)

VIEW B-B

2. Drill eight no. F (0.25 inch) holes in line
   Taper ream (T87) holes, 125 finish,
   Install
   Tapered bushing (79B1-4-5 or 20-037-4-5) (8 reqd)
   Bolt (4 reqd)
   Washer (8 reqd)
   Nut (4 reqd)

NOTE

Remove burrs and metal particles and apply zinc chromate primer (C312) to raw metal.

NOTE

Maximum chuck in jackshift not to exceed 0.060 inch.

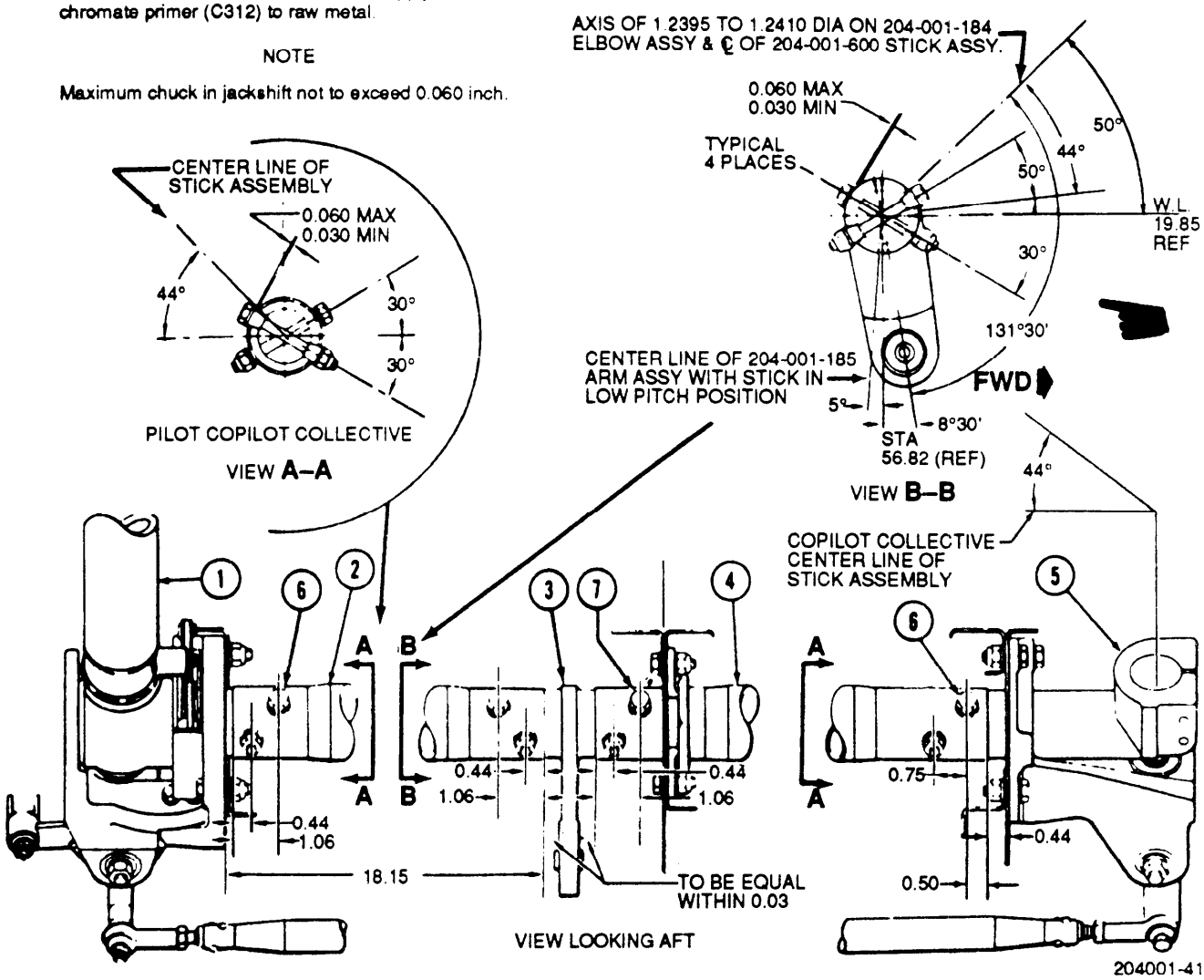

1. Pilot collective control assembly
2. Tube
3. Arm Assembly
4. Tube
5. Copilot collective control assembly
6. Bolt
   Nut
   Washer
   Tapered bushing
7. Bolt
   Nut
   Washer
   Tapered bushing

Figure 11-3. Collective Jackshaft Repair

j. Connect control tube (46) to pilots collective stick with bolt (47), washers (45) and nut (44). Torque nut **7 TO 12** inch-pounds and install cotter pin (43).

k. Connect electrical connector to receptacle and lockwire (C155. Install boot (42) using screws (48).

l. Install copilots collective stick in control assembly elbow (58).

m. Install bolts (60), with bolt heads up washers (57) and nuts (56).

n. Adjust collective friction (paragraph 11-27),

o. Attach control tube (10) to arm (24). Install one washer (9) under bolt head (8) and one washer (9) under nut (12) Torque nut **30 TO 40** inch-pounds and Install cotter pin (11).

p. Check collective rigging (paragraph 11-6)

11-17, CONTROL ASSEMBLY – COLLECTIVE JACKSHAFT,

11-18. Description — Control Assembly — Collective Jackshaft. A control assembly (58, figure 11-2) is mounted on left side of the collective jackshaft The control assembly provides for mounting of the copilots collective stick and transmits copilots throttle motion to control tube (22) which is Interconnected to pilots throttle control.

11-19, Removal — Control Assembly – Collective Jackshaft. Refer to paragraph 11-11

11-20, Disassembly — Control Assembly — Collective Jackshaft (AVIM). a. Remove cotter pin (27, figure 11-4), nut (26), and washer (25)

b. Remove nut (18), washer (17), screw (14). Slide shaft (24) from support assembly (3) and lever (20)

c. Remove lever (20) and shim (19) from support assembly (3)

d. Remove nut (16) and washer (15) attaching pinion (21) to drive assembly (8),

e. Remove pinion (21) from drive assembly (8).

f. Remove shim (13), guide (7), and drive assembly (8) from elbow assembly (10).

g. Remove key (9) from slot in drive assembly (8).

h. Slide elbow assembly (10) out of support assembly (3).

i. Remove spirolox (1) securing bearing (2) to support assembly (3) Remove bearing (2).

j Refer to paragraph 11-185 for removal of bushings (4 and 22), sleeve (11) and bearings (5, 12 and 23) from support assembly (3)

11-21. Inspection — Control Assembly – Collective Jackshaft (AVIM) a. Inspect all parts of control assembly for wear, damage and corrosion

b. Inspect bearings for binding and damage,

11-22. Repair or Replacement — Control Assembly – Collective Jackshaft (AVIM) a. Replace all defective bearings. Refer to paragraph 11-185 for bearing replacement.

b. Replace all parts that show evidence of wear, damage and corrosion

11-23, Assembly – Control Assembly – Collective Jackshaft (AVIM) a. Place bearing (2, figure 11-4) in support assembly (3) and secure with spirolox (1)

b. Install sleeve (11), bushings (4 and 22) and bearings (5, 12 and 23), in support assembly (3),

c. Slide elbow assembly (10) into support assembly (3)

d. Install key (9) in slot at bottom of drive assembly (8)

e. Install shim (13), guide (7), and drive assembly (8) in elbow assembly (10)

f. Slide pinion (21) on drive assembly (8) and secure with washer (15) and nut (16).

NOTE

If unable to adjust shim (13) to required friction, adjust shim (19) to provide required friction.

g. Position lever (20) and shim (19) between bearings (5 and 23) and insert shaft (24) through bearings (5 and 23), shim (19), and lever (20). Align hole in lever and shaft and install screw (14), washer (17), and nut (18). Install washer (25) and nut (26) on shaft. Check for a **0.50 TO 1.50** pounds pull at end of lever (20). to rotate lever. Add or remove shim (13), as required, to provide for **0.50 TO 1.50** pounds friction. Secure nut (26) with cotter pin (27).

11-24. Installation — Control Assembly — Collective Jackshaft. Refer to paragraph 11-16 for installation of control assembly.

11-25. PILOTS COLLECTIVE STICK.

11-26. Description — Pilots Collective Stick. The pilots collective stick (right side) controls pitch of the main rotor blade. When collective stick is in up position, main rotor blades are at maximum pitch; when collective stick is down, blades are at minimum pitch. A knurled nut on the pilots collective stick allows the pilot to adjust collective friction to his own requirements. A minimum friction adjustment is provided so that the collective stick will always have a preset minimum feel. A switch box mounted on top of pilots collective stick contains the following switches: landing light switches, searchlight switches, engine governor switch, engine idle stop release switch, and engine start trigger switch.

11-27. Functional Test-Pilots Collective Stick Minimum Friction (Hydraulic Boost On).

a. Check for proper amount of minimum friction as follows:

(1) Connect external hydraulic power to aircraft in accordance with paragraph (7-4).

(2) Loosen friction nut (2, figure 11-5) so that no friction is being applied by nut (2).

(3) Attach a pull scale at the center of the twist grip (plus or minus 1/2 inch).

CAUTION

A force of less than 8 pounds could result in damage to the aircraft. Up and down force should be equal at mid-travel within 1 pound with hydraulic power on. If unable to obtain this balance, do not adjust the collective servo balance spring. Equalization of collective friction is not to be corrected through a servo balance adjustment. If friction force is not equal within 1 pound refer to the inspection criteria outlined in paragraph 11-10 and 11-30.

NOTE

Breakaway force of 8 to 10 pounds is the minimum amount of pull resistance required for the collective to begin to move. Friction may be noticeably less on abnormally damp days. Friction adjusted on damp days may be too heavy on dry days.

CAUTION

Ensure that collective balance spring has not been previously bent from initial position.

(4) With hydraulic power on, pull up perpendicular to the collective stick and check for a breakaway force of 8 to 10 pounds minimum.

b. Functional Test Pilots Collective Stick Minimum Friction (hydraulic boost OFF).

(1) Disconnect collective control tube from collective jackshaft.

(2) Loosen friction nut (2, figure 11-5) so that no friction is being applied by nut (2).

(3) Attach a pull scale at the center of the twist grip (plus or minus 1/2 inch).

NOTE

Breakaway force of 14 to 16 pounds is the minimum amount of pull resistance required for the collective to begin to move. Friction may be noticeably less on abnormally damp days. Friction adjusted on damp days may be too heavy on dry days.

(4) Pull up perpendicular to the collective stick and check for a breakaway force of 14 to 16 pounds with collective stick positioned approximately 1/3 of full travel from bottom stop.

c. Adjustments — Pilots Collective Stick Friction (adjust minimum friction on aircraft with serial number 64-13429 and subsequent as follows): Refer to Figure 11-5.

CAUTION

Do not adjust setscrews (4) to bear heavily against washers (6 and 7) to do so will bend the washers, thus requiring disassembly of collective control stick to replace the damaged part.

(1) Remove pilots collective stick dust boot.

(2) Loosen setscrews (4) to accommodate free movement of washers (6 and 7).

(3) Adjust friction nut (2) to obtain required friction as described in paragraph (11-27.a) with hydraulic boost on or paragraph (11-27.b) with hydraulic boost off.

(4) Adjust setscrews (4) to contact washers (6 and 7).

d. Adjust minimum friction on aircraft with serial number 60-6026 through 60-6034 and 62-2106 through 63-13002 as follows:

(1) Remove shims laminates (9) to decrease friction. To increase friction install a new shim and peel to obtain proper breakaway force. See paragraph 11-19 for disassembly.

(2) Additional friction load can be applied by adjusting friction nut (2) to individual pilot requirement.

11-28. Removal-- Plots Collective Stick. (Figure 11-2, sheets 1 and 2).

a. Remove screws (48) and boot (42).
b. Disconnect electrical connector.
c. Remove bolts (3), washers (2), tapered bushings (4) and nut (25) attaching jackshaft tube (5).
d. Remove nuts (37 and 39), washers (36 and 40), bolts (35) and screws (41) attaching housing to structure.
e. Remove bolt (1), washers (2), and nut (26) attaching tube assembly (22).
f. Disconnect control tube (46) by removing pin (43), nut (44), washers (45) and bolt (47). Remove stick assembly (34).

11-29. Disassembly - Pilots Collective Suck.

a. Release clamps at bottom of tube (4, figure 118) and unscrew nut to release cable (5) from bracket on tube (4).
b. Remove screws (25) attaching cover on switch box (26). Push cable (5) upward to allow cover to be moved without disconnecting electrical wiring.
c. From inside switch box (26), drive out pin (24) and lift switch box from lever tube (4).
d. Remove washers (29, 28, and 27).
e. Drive pin (34) from throttle grip (33) and slide grip off tube.
f. Remove cotter pin (7) and release drag link (10) from pin (6).
g. Remove retainer ring (1) and unscrew friction nut (3) with bearing (2) installed.
h. Slide lever tube (4) off inner tube.
i. If inner tube (35) is to be replaced after inspection, remove lockwire and nut (35) and remove tube from elbow (20).

11-30. Inspection - Pilots Collective Stick (Disassembled).

NOTE

Pilots collective tick elbow PIN 204-001-1943 need to be replaced at overhaul because of previously drilled Jackshaft tube attachment holes. Replace elbow if the largest diameter of the jackshaft attachment tapered hole exceed 0.500 inch.

a. Inspect all parts of pilots collective stick for nicks, scratches, dents, broken or damaged tubing or frayed or broken cabling.

b. Inspect fiction mechanism on pilots collective stick for general condition. Inspect friction shoes (11) for condition and secure bonding to housing.

c. Inspect bearings for wear or roughness. Refer to paragraph 11-185 for bearing replacement.

d. Check switches on collective stick (Appendix F).

1131. Repair or Replacement - Pilots Collective Stick.

a. Replace all parts that are worn, damaged, broken, bent, or corroded.

b. Replace electrical wires If frayed, or broken.

c. Replace bearings if worn, rough, or damaged (paragraph 11-185).

d. Replace friction lines on housing assembly if separation of bonded area has occurred, if damaged or if lines less than .005 inch above rivets. Liners without rivets are to be replaced if thickness is less than .035 inch in wear area. Replace liners as follows:

(1) Where applicable, drill out rivets holding liner to housing assembly. (Refer to TM 551500-204-23-10).

(2) Remove old finer and adhesive residue by grinding using #80 grit or finer. Exercise care while removing liner. Do not gouge metal on bonding surface of housing area. If necessary finish removal to a bare metal surface by using abrasive cloth #250 grit or finer, PC 451C, (C9).

e. Bond liners to housing part no. 204-001-601 as follows:

(1) With suitable brush, apply magnesium pickle (Chromic Acid) to bonding surface of housing area. (Refer to TM 1-1500-34423). Allow solution to remain on the part for one (1) to three (3) minutes. Wipe off excess magnesium pickle solution with a clean rag, or rinse off with cold water. Blow air onto the treated area to facilitate drying.

(2) Apply a coat of epoxy adhesive (C29) to bonding surface of housing area. A minimum bonded adhesive thickness of .007 TO .015 inch is recommended.

(3) Align and clamp liner to housing area using small "C" damps.

(4) Remove excess adhesive squeeze-out from bond line areas before curing.

(5) Cure adhesive at 350 degrees F for 60 minutes. Allow part to air cool to room temperature and remove clamps.

11-32. Assembly - Pilots Collective Stick

NOTE

If shoes (11) have been removed, assure the hole in pin (15) has been engaged by pin (16) upon reassembly. Also ensure that pins (9) are secured by cotter pins (7).

a. If inner tube (35, figure 11-6) was replaced, place new tube in elbow (20), install nut (36), torque at **500 to 600** inch-pounds and lockwire with 0.032 corrosion-resistance wire.

a.1. Slide tube (4) onto inner tube against connector or laminated friction washer. Install friction nut (3) and bearing (2) on tube assembly. Secure with retainer ring (1).

b. Slide throttle grip (33) onto tube assembly; align holes in grip with hole in throttle shaft, and install pin (34).

c. Install nut (30), steel washer (29), rubber washer (28), and steel washer (27), in that order.

d. Position switch box (26) on tube (4). Align holes and install pin (24).

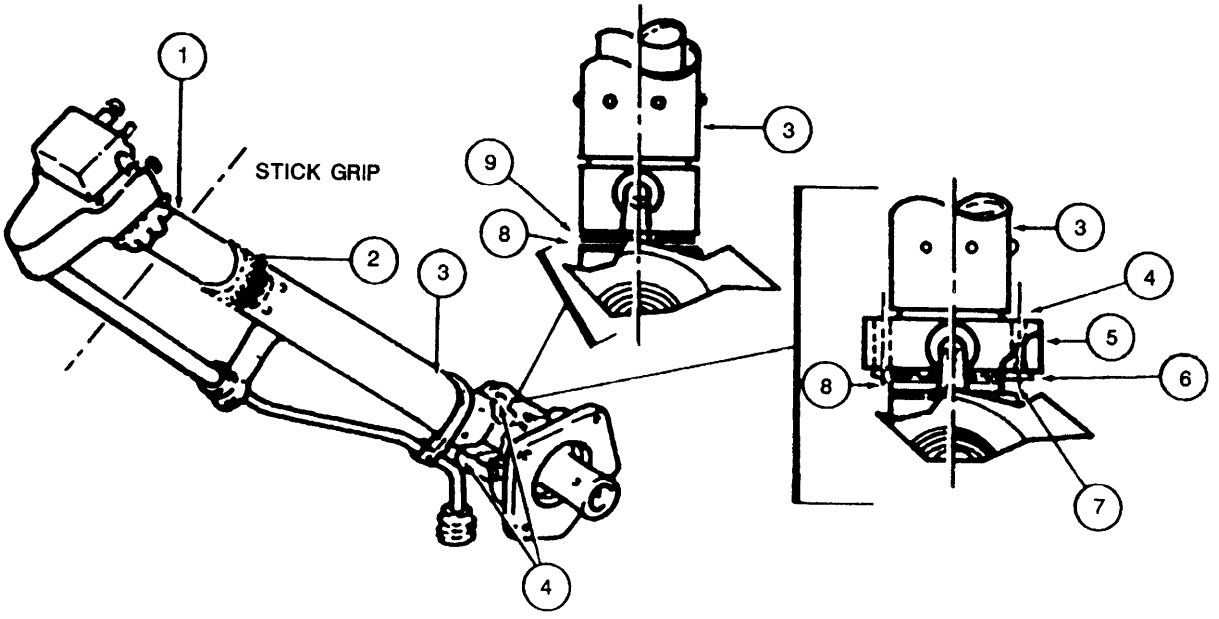

1. Collective Stick Grip
2. Friction Nut
3. Stick Assembly
4. Setscrews
5. Connector
6. Washer
7. Washer
8. Nut
9. Friction Laminated Washer

Figure 11-5. Collective Friction Adjustment-Pilots Collective Stick

e. Install switch box cover and secure with screws (25).

f. Connect drag link (10) to pin (6), Secure with cotter pin (7).

g. Secure cable (5) to collective stick at bracket and install clamp.

11-33. Installation - Pilots Collective Stick. a. Position stick assembly (34, figure 11-2) in place and secure to airframe using bolts (35), washers (36 and 40), nuts (37 and 39), and screws (41), Refer to paragraph 11-16.

b. Deleted.

Figure 11-5.1. DELETED

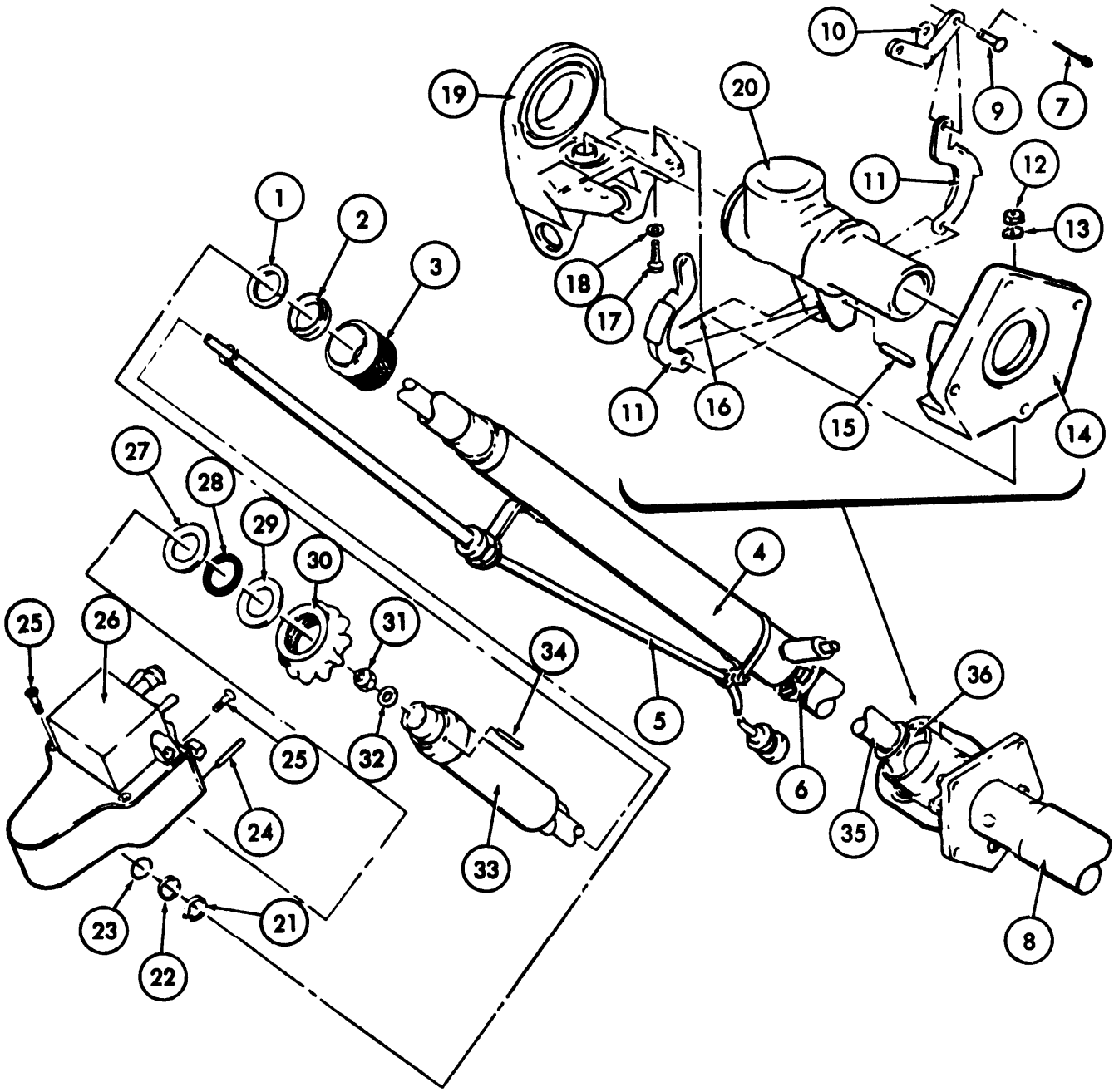

1. Retaining Ring
2. Bearing
3. Collective Friction Nut
4. Tube
5. Cable Assembly
6. Pin
7. Cotter Pin
8. Jackshaft Tube
9. Pin
10. Drag Link
11. Friction-Shoes
12. Nut
13. Washer
14. Housing
15. Pin
16. Pin
17. Bolt
18. Washer
19. Support
20. Elbow
21. Retaining Ring
22. Washer
23. Pocking
24. Pin
25. Screw
26. Switch Box
27. Washer
28. Non-metallic washer
29. Washer
30. Throttle Friction Nut
31. Nut
32. Washer
33. Throttle Grip
34. Pin
35. Innertube
36. Nut

Figure 11-6. Pilots Collective Stick Exploded View

c. Deleted.

d. Deleted.

e. Deleted.

f. Deleted.

11-34. COPILOTS COLLECTIVE STICK.

11-35. Description - Copilots Collective Stick. The copilots collective stick (left side provides same collective and throttle control as pilots collective stick. The copilots collective stick is mounted to an elbow on control assembly attached to left side of collective jackshaft.

11-36. Removal - Copilots Collective Stick. a Remove screws (61, figure 11-2) and remove boot (50).

b. Remove bolts (60), washers (57), and nuts (56) attaching stick assembly to elbow.

c. Disconnect electrical plug from airframe mounted receptacle.

d. Disengage stick assembly (49) from drive assembly. Remove stick assembly.

11-37. Disassembly - Copilots Collective Stick. (AVIM) a. Release clamps (13 and 17, figure 11-7) at bottom of stick assembly by removing screw (12), washer (15) and nut (26).

b. Remove four screws (1) and washers (2) securing switch box cover (3) to switch box (5).

c. Drive out pin (6), remove nut (4) and remove switch box (5) from stick assembly (18).

d. Remove conduit (7) from stick assembly (18).

e. Remove screw (19) and washers (21). Remove grip assembly (8).

f. Slide tube assembly (20) from stick assembly (18).

11-38. Inspection - Copilots Collective Stick: a. Inspect parts for nicks, scratches and wear. Replace damaged parts.

b. Inspect all detail pails for corrosion. Replace parts that have corrosion.

c. Inspect all parts for thread damage.

d. Inspect bearings for looseness and binding. Replace defective bearings.

N O T E

Bearings (10), (19) and bushing (11) figure 11-7, are not required on grip assembly PN 205-001-119-1.

11-39. Assembly - Copilots Collective Stick. (AVIM) a. Insert tube assembly (20, figure 11-7) into stick assembly (18). Install grip assembly (8) onto stick assembly (18).

b. Align holes in grip assembly (8) with slot in stick assembly.

c. Install screw (9) and washers (21).

d. Assemble switch box (5) to top of stick assembly. install nut (4).

e. Attach conduit (7) to stick assembly, using pin (6), switch box (5) and conduit (7).

f. Install cover (3) using screws (1) and washers (2).

g. Attach cable assembly to stick using two clamps (13 and 17), screw (12), washer (15) and nut (16).

11-40. Installation - Copilots Collective Stick. a. Install stick assembly (49 figure 11-2) to elbow and control assembly (58), engaging stick to control guide.

b. Install two bolts (60), washers (57), and nuts (56).

c. Install boot assembly (50) Secure boot to cabin floor with screws (61).

d. Connect electrical plug to airframe receptacle.

11-41. CONTROL TUBES COLLECTIVE CONTROL SYSTEM.

11-42. Description - Control Tubes Collective Control System. Adjustable and nonadjustable control tubes are used in the collective control system. The non-adjustable type is fitted with

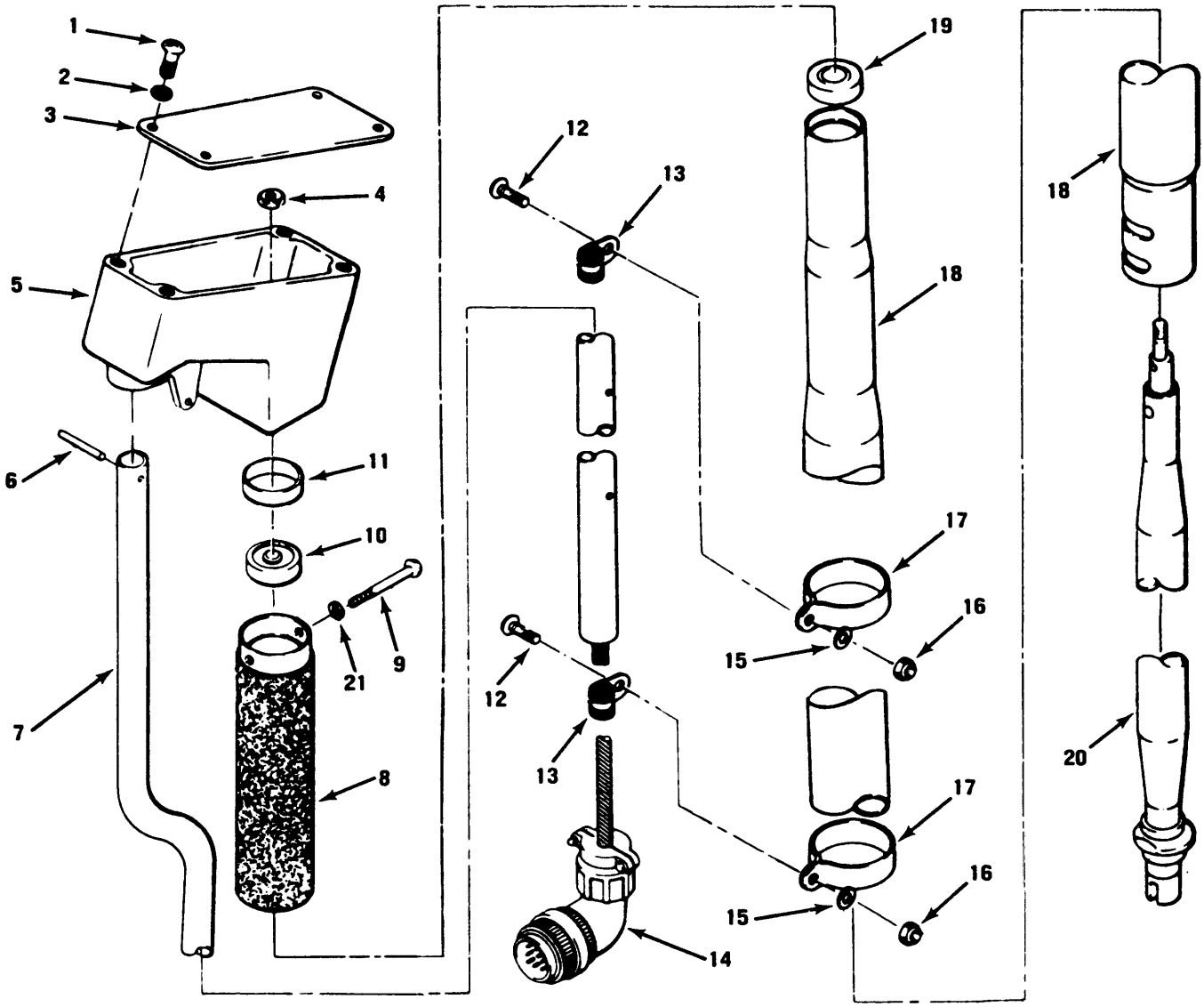

1. Screw
2. Washer
3. Cover
4. Nut
5. Switch box
6. Pin
7. Conduit
8. Grip
9. Screw
10. Bearing
11. Bushing
12. Screw
13. Clamp
14. Electrical plug
15. Washer
16. Nut
17. Clamp
18. Stick assembly
19. Bearing
20. Tube assembly
21. Washer

Figure 11-7. Copilots Collective Stick – Exploded View

bonded and riveted clevis ends. The adjustable type has a threaded clevis end and locknut which secures clevis end.

11-43. Removal — Control Tubes — Collective Control System.

a. Remove access doors (39, 65, 69, 70, 71, 72, 73, and 79, figure 2-18) as required.

b. Detach end of control tube (6, figure 11-8), from torque tube lever (1) by removing cotter pin (5), nut (4), washers (3), and bolt (2).

c. Detach opposite end of control tube (6) from lever (13) by removing cotter pin (5), nut (8), washer (3), and bolt (7).

d. Detach end of control tube (10) from lever (13) by removing cotter pin (5), and nut (11), washers (3), and bolt (9).

e. Loosen and slide clamp (26) forward off boot. Detach opposite end of control tube (10) from bellcrank (23) by removing cotter pin (5), nut (24), washer (3), and bolt (25).

f. Detach end of control tube (19) from bellcrank (23) by removing cotter pin (5), nut (18), washers (3), and bolt (20).

g. Detach opposite end of control tube (19) from collective hydraulic actuator by removing cotter pin, nut, washers and bolt.

Premaintenance Requirements for Control Tubes Collective Control System

Conditions	Requirements
Model	All
Part No. or Serial No.	All
Special Tools	None
Test Equipment	Eddy Current Inspection Unit
Support Equipment	None
Minimum Personnel Required	Two
Consumable Materials	None
Special Environmental Conditions	None
References	TM 1-1520-256-23

11-44. Inspection — Control Tubes — Collective Control System.

a. Inspect control tubes (6, 10 and 19, figure 11-8) for corrosion, wear, and mechanical damage. See figure 11-9for wear and damage limits. If a crack in the support tubes is suspected, refer to TM 1-1520-256-23, Technical Manual Aviation Unit Maintenance (AVUM) and Aviation Intermediate Maintenance (AVIM) manual nondestructive inspection procedures for UH-1 helicopter series.

b. Inspect clevis end holes for wear and clevis end for looseness in tube.

11-45. Repair or Replacement — Control Tubes — Collective Control System (AVIM).

a. Polish out corrosion or mechanical damage to control tubes (repair areas only) in accordance with limits in figure 11-9.

b. Any damage to swage transition area or damage in repair areas that is in excess of limits is cause for replacement of tube assembly.

11-46. Installation — Control Tubes — Collective Control System.

a. Attach end of control tube (6, figure 11-8) to arm on torque tube lever (1) and install bolt (2), washers (3), nut (4), and cotter pin (5).

b. Attach opposite control tube (6) to lever (13) and install bolt (7), washers (3), nut (8) and cotter pin (5).

c. Attach opposite end of control tube through boot. (See detail C.) Position forward end of control tube (10) to lever (13). Install bolt (9), washers (3), nut (11) and cotter pin (5).

d. Attach end of control tube (10) to bellcrank (23). Install bolt (25), washers (3), nut (24) and cotter pin (5) (detail C).

e. With collective stick full down, position boot control on tube (10) so that end of boot is **7.90** inches from bulkhead. Install clamp (26) on boot and tighten.

f. Attach end of control tube (19) to bellcrank (23). Install bolt (20), washers (3), nut (18) and cotter pin (5).

g. Attack control tube (19) to hydraulic actuator during rigging of collective control system.

h. Rig system (paragraph 11-6).

i. Install access doors (39, 65, 69, 70, 71, 72, 73 and 79, figure 2-18) as required.

11-47. BELLCRANKS, LEVERS AND SUPPORTS — COLLECTIVE CONTROL SYSTEM.

11-48. Description — Bellcranks, Levers and Supports — Collective Control System. Various bellcranks, levers and supports are incorporated in the collective control system. The supports are airframe mounted and provide a pivot mount for levers and bellcranks.

11-49. Removal — Bellcranks, Levers and Supports — Collective Control System.

a. Remove lever (13, figure 11-8) from bracket as follows:

(1) Remove access door (73, figure 2-18).

(2) Disconnect control tubes (6 and 10, figure 11-8) from lever (13).

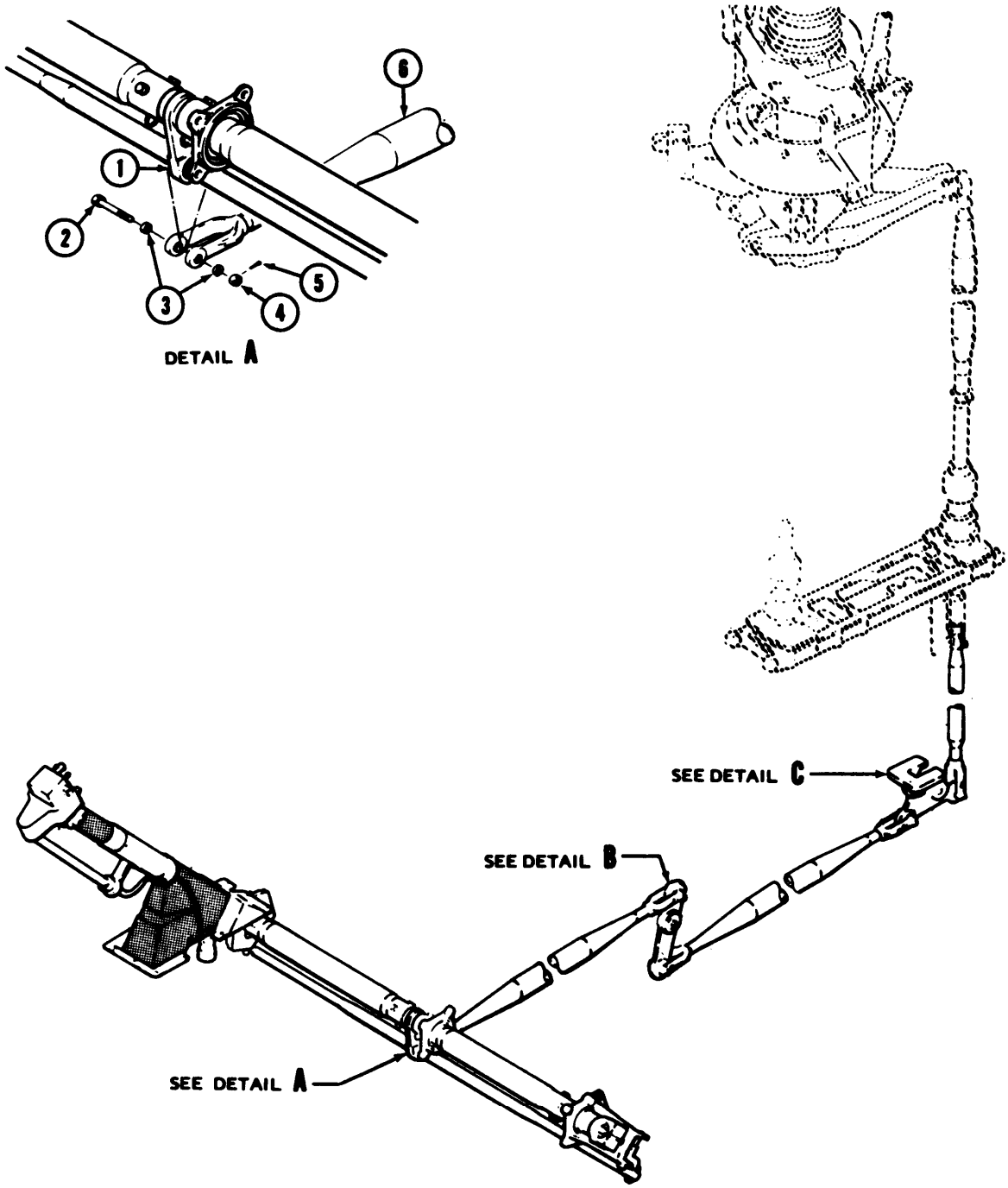

1. Lever
2. Bolt
3. Washers
4. Nut
5. Cotter pin
6. Control tube

Figure 11-8. Collective Control System (Bellcranks, Levers, Supports, and Control Tubes) – Removal and Installation (Sheet 1 of 2)

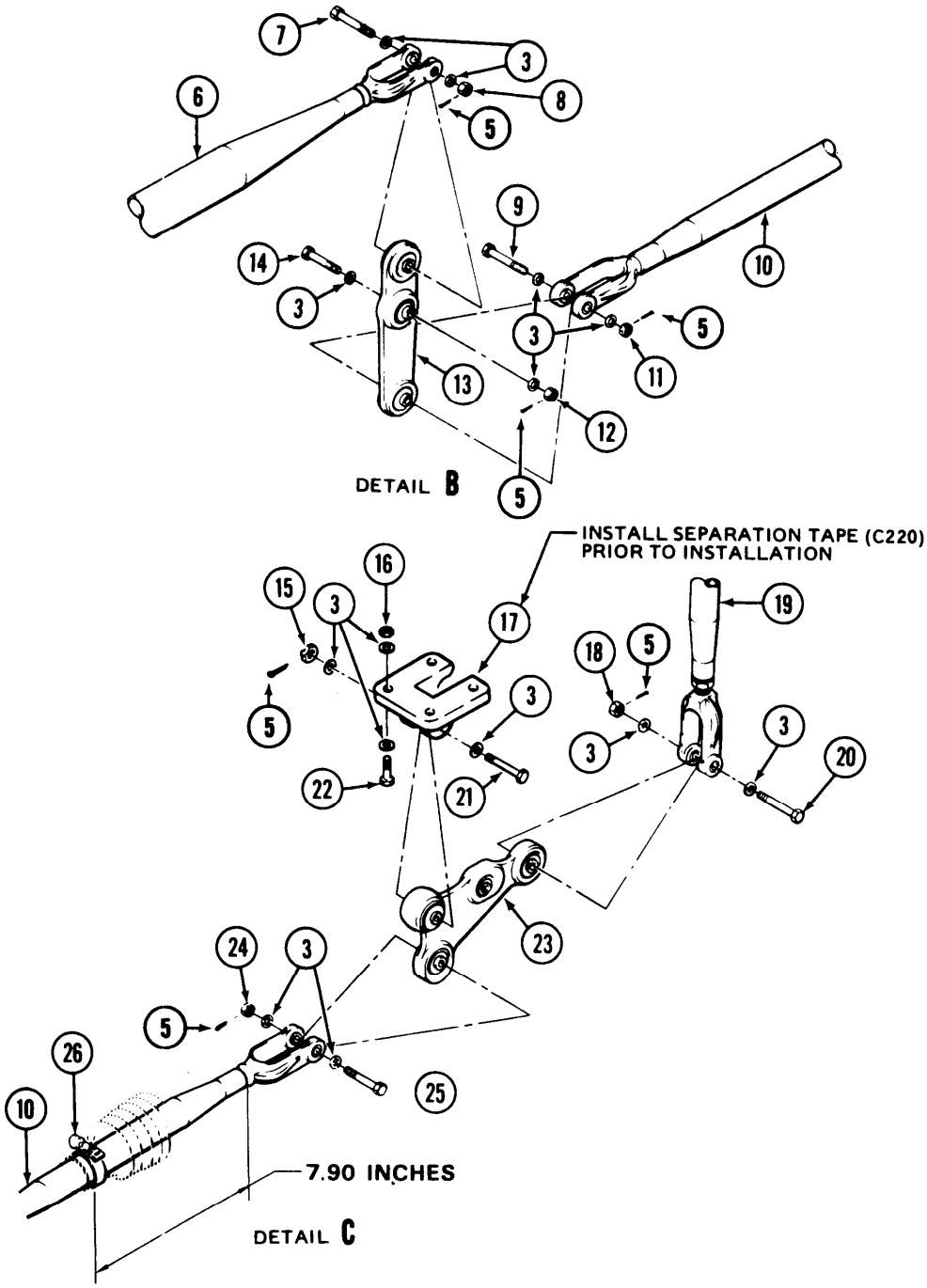

7. Bolt
8. Nut
9. Bolt
10. Control tube
11. Nut
12, Nut
13. Lever
14. Bolt
15. Nut
16. Nut
17. support
18. Nut
19. Control tube
20. Bolt
21. Bolt
22. Bolt
23. Bellcrank
24. Nut
25. Bolt
26. Clamp

Figure 11-8. Collective Control System (Bellcranks, Levers, Supports, and Control Tubes) — Removal and Installation (Sheet 2 of 2)

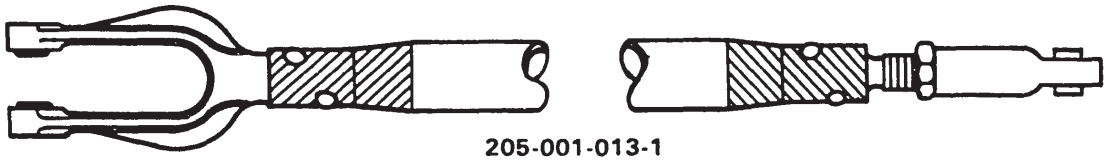

205-001-013-1
CONTROL TUBE ASSEMBLY

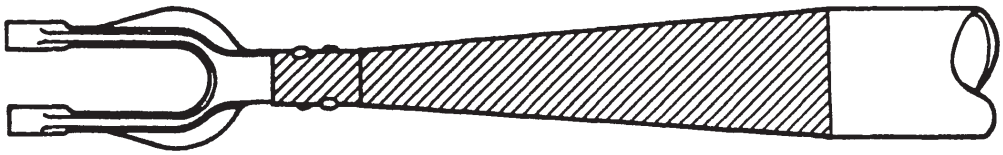

204-001-027-23
205-001-011-17
CONTROL TUBE ASSEMBLY
(Both Ends Identical)

NOTES:

1. **Maximum mechanical and corrosion limits for all three tubes is 0.005 inch after clean-up.**
2. **No damage in shaded areas.**
3. **No cracks allowed.**

Figure 11-9. Wear and Damage Limits (Control Tubes) Collective Control System

(3) Remove cotter pin (5), nut (12), two washers (3) and bolt (14) from bracket and lever (13). Remove lever (13).

b. Remove bellcrank (23) and support (17) as follows: (Detail C)

(1) Remove cargo hook (paragraph 14-285).

(2) Disconnect control tubes (10 and 19) (See Detail C.) from bellcrank (23).

(3) Remove cotter pin (5), nut (15), two washers (3) and bolt (21) from support (17) and remove bellcrank (23).

(4) Remove four nuts (16), eight washers (3) and four bolts (22) from support (17) and remove support (17).

Premaintenance Requirements for Bellcranks, Levers, and Supports Collective Control System

Conditions	Requirements
Model	All
Part No. or Serial No.	All
Special Tools	None
Test Equipment	Eddy Current Inspection Unit
Support Equipment	None
Minimum Personnel Required	Two
Consumable Materials	None
Special Environmental Conditions	None
References	TM 1-1520-256-23

11-50. Inspection — Bellcranks, Levers and Supports — Collective Control System.

a. Inspect bellcranks, levers and supports for loose bearings. Refer to paragraph 11-185 for bearing limits.

b. Inspect bellcranks, levers and supports for corrosion and mechanical damage. See figure 11-10 for inspection limits. If a crack in the Bellcranks, Levers, or Supports is suspected, refer to TM 1-1520-256-23, Technical Manual Aviation Unit Maintenance (AVUM) and Aviation Intermediate Maintenance (AVIM) manual nondestructive inspection procedures for UH-1 helicopter series.

11-51. Repair — Bellcranks, Levers and Supports — Collective Control System (AVIM).

a. Replace loose or damaged bearings in bellcranks, levers and supports. Refer to paragraph 11-185 for bearing replacement.

b. Remove minor surface corrosion or repair damage areas using fine grit sandpaper (C233). Observe limits shown in figure 11-10.

(1) Treat repaired areas with chemical film (C62).

(2) Paint repaired area using primer (C312).

11-52. Installation — Bellcranks, Levers and Supports — Collective Control System.

a. Install lever (13, figure 11-8). Position lever (13) into bracket of cabin structure and install bolt (14), washers (3), and nut (12). Install cotter pin (5).

b. Install bellcrank (23) and support (17) as follows:

CAUTION

Ensure that bellcrank (23) and support (17) are positioned properly prior to installation. (See detail C.)

(1) Install separation tape (C278) (overlapping edges 1/4 inch) to support (17).

(2) Install washers (3) on bolts (22).

(3) Apply primer (C312) to bolts (22) and install bolts (22), support (17), washers (3) and nuts (16) through support to cabin structure. (See detail C.)

(4) Position bellcrank (23) as shown in detail C to support (17) and install bolt (21), washers (3) and nut (15). Secure nut (15) with cotter pin (5).

(5) Install control tube assemblies (10 and 19) to bellcrank (23).

(6) Install cargo hook (paragraph 14-289).

(7) Install access door (73, figure 2-18).

11-53. CYCLIC CONTROL SYSTEM.

11-54. Description — Cyclic Controls. A system of linkage (figure 11-11) transmits movement from cyclic control sticks to swashplate which actuates rotating controls to main rotor, controlling direction of helicopter. Fore-aft lateral control are independent linkages from control stick to an intermixing bellcrank. From this point on the swashplate horns, linkage cannot be considered separately as to effect. Two hydraulic power cylinders are incorporated to reduce effort required for control and to reduce feedback forces from main rotor. Two force gradient units, with magnetic brakes, are incorporated for artificial control feed and stabilization of controls.

11-55. Rigging — Cyclic Controls.

CAUTION

Use of hydraulic ground test equipment, with any flight control tube disconnected, may result in damage to swashplate, scissors and sleeve assemblies.

Premaintenance Requirements for Rigging Cyclic Controls

Conditions	Requirements
Model	All
Part No. or Serial No.	All
Special Tools	(T32)
Test Equipment	None
Support Equipment	Maintenance Work Stands
Minimum Personnel Required	Two
Consumable Materials	(C59), (C113), (C177), (C155), (C231), (C278), (C312)
Special Environmental Conditions	None

a. Rig system with control sticks, jackshaft, bellcranks, and all nonadjustable tubes installed and connected (paragraph 11-100).

b. Place and hold both cyclic control sticks in either extreme right or left lateral position against stops. Adjust tube (6, figure 11-11) to fit and connect.

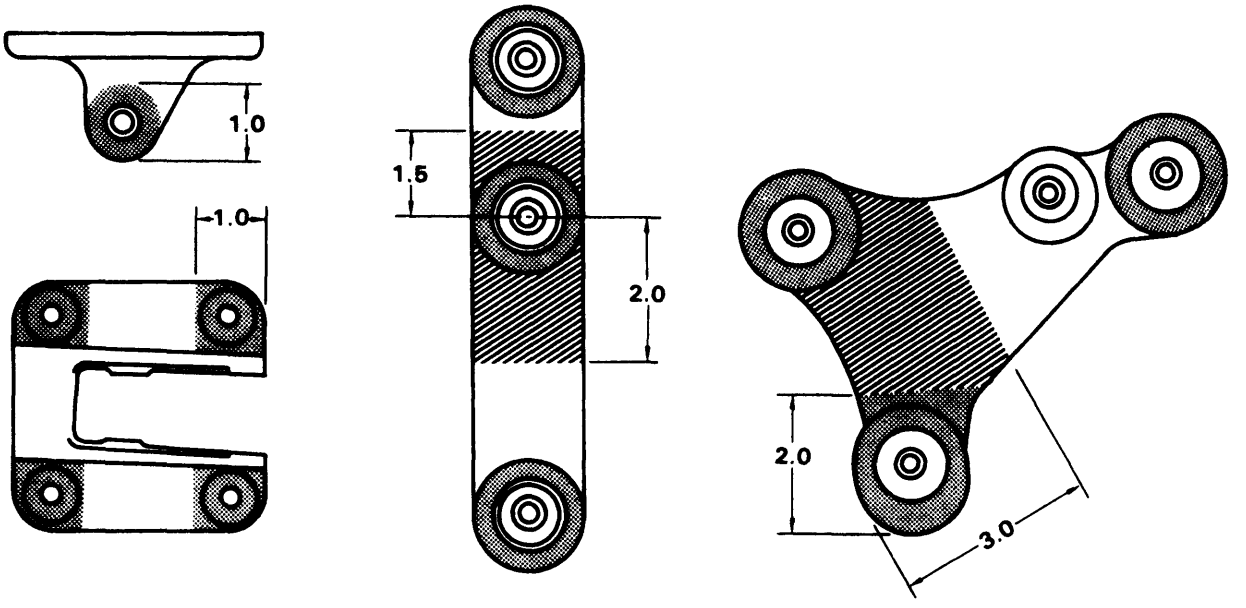

204-001-102-1
SUPPORT

204-001-603
LEVER ASSEMBLY

204-001-148-1
BELLCRANK

DAMAGE AREA REPAIR SYMBOLS

TYPE OF DAMAGE			
MECHANICAL DAMAGE (AFTER CLEAN-UP)	0.015 IN.	0.010 IN.	0.005 IN.
CORROSION DAMAGE (BEFORE CLEAN-UP) (AFTER CLEAN-UP)	0.0075 IN. 0.015 IN.	0.005 IN. 0.010 IN.	0.0025 IN. 0.005 IN.
MAXIMUM AREA PER FULL DEPTH REPAIR	1 IN. SQ	0.10 IN. SQ.	0.10 IN. SQ.
NUMBER OF REPAIRS	ONE PER AREA	ONE PER AREA	ONE PER AREA
EDGE CHAMFER	0.05 BY 0.05	0.04 BY 0.04	
BORE DAMAGE	0.002 IN. FOR ONE-FOURTH CIRCUMFERENCE		

NO CRACKS ALLOWED

ALL DIMENSIONS IN INCHES UNLESS OTHERWISE SPECIFIED

Figure 11-10. Wear and Damage Limits (Bellcranks, Levers, and Supports) – Collective Control System

218-260 0 - 88 - 12

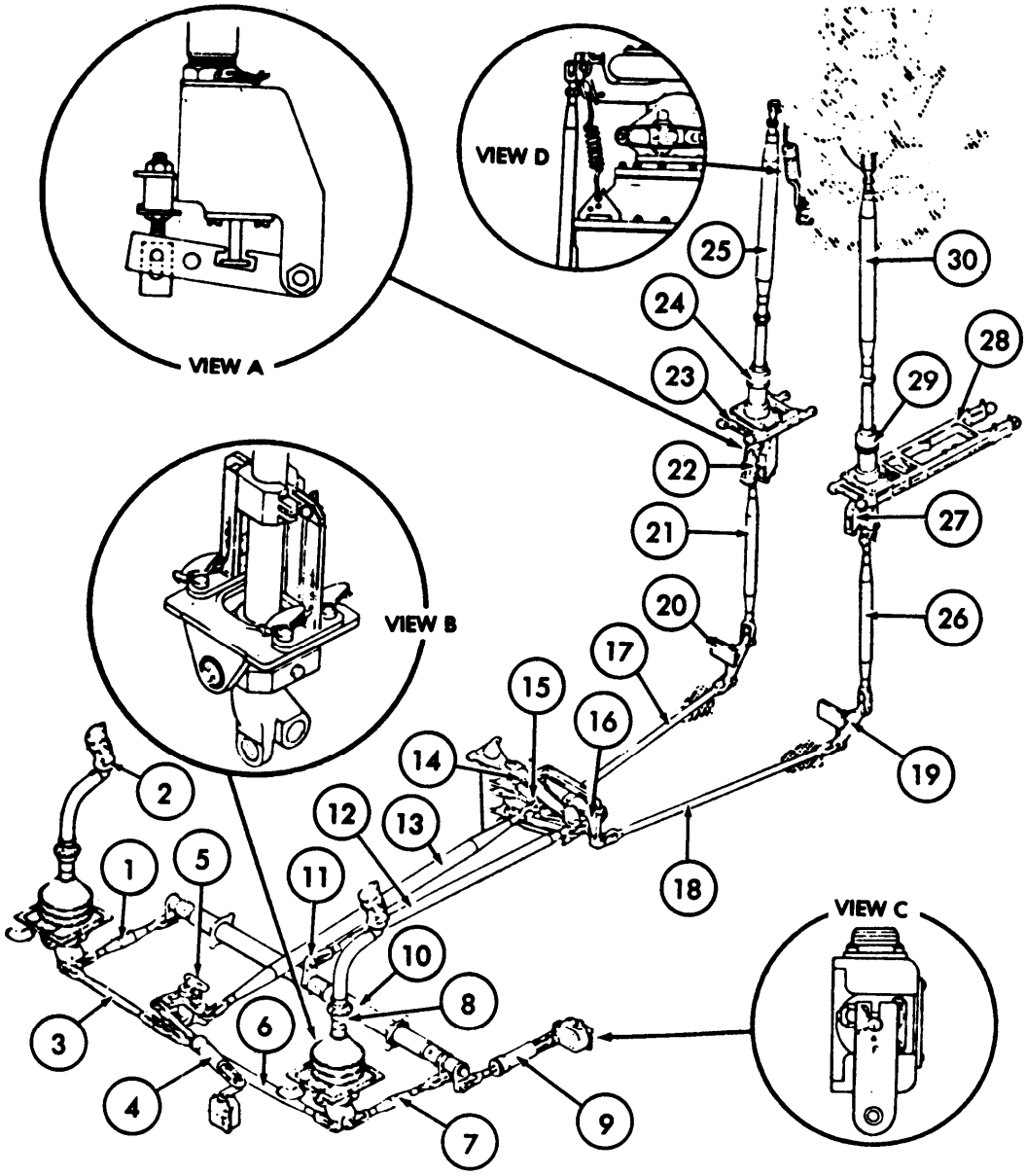

1. Control tube-Fore Aft
2. Cyclic Control Stick
3. Control tube-Lateral
4. Force gradient-Lateral
5. Bellcrank
6. Control tube
7. Control tube Fore Aft
8. Cyclic Control Stick
9. Force gradient-Fore Aft
10. Control tube
11. Lever
12. Control tube
13. Control tube
14. Matched Link Set
15. Bellcrank
16. Bellcrank
17. Control tube
18. Control tube
19. Bellcrank
20. Bellcrank
21. Control tube
22. Servo Valve
23. Support
24. Cylinder Assembly
25. Control tube
26. Control tube
27. Irreversible Valve
28. Support
29. Cylinder Assembly
30. Control tube

Figure 11-11. Cyclic Control System

c . Place and hold both cyclic control sticks in extreme forward or extreme aft position against stops. Adjust tube (7) to fit and connect.

d. Place and hold pilots cyclic stick in extreme aft-left corner position, so that upper arm of bellcrank (20) is in its uppermost position. Bottom out piston up-travel at top of cylinder (24) and set lever of servo valve in up position (view A, figure 11-11). Adjust tube (21) to fit, then shorten three full turns and attach to valve lever with bolt, nut, and washers. Install washer next to bolt head and also next to nut. Torque nut to **25** Inch-pounds maximum (bolt must turn freely) Install cotter pin.

e . Place and hold pilots cyclic stick in extreme aft-right corner position, and adjust tube (26) in same manner. Attach tube to valve lever and torque as outlined in step (d).

f. Install cyclic stick fixture (T32) on copilots control stick (view B, figure 11-11).

g. Position swashplate according to dimensions with limits shown (figure 11-12). With servo valve levers neutral, adjust rod end clevis on control tubes (25 and 30, figure 11-11) to fit and connect to swashplate horns. Use auxiliary hydraulic power if available. After final adjustment torque jam nut and seal area (figure 7-12). Lockwire (C155) the nut.

h. Check arm of fore-aft magnetic brake for alignment of letter "F" opposite scribe mark on shaft and lateral magnetic brake arm for letter "L" opposite mark on shaft.

i. Place arm of lateral magnetic brake at center of travel. With cyclic stick in neutral, adjust link on lateral force gradient (4) to fit and connect.

j. Remove fixture (T32).

k. Place and hold cyclic stick against forward stop Place arm of fore-aft magnetic brake against aft stop. Adjust fore-aft force gradient (9) to fit. Extend clevis fitting 3-1/2 turns and connect.

l. Check controls for full free travel before applying hydraulic pressure. Check controls for full free travel with hydraulic pressure applied.

m . Check that balance spring (view D, figure 11-11) is hooked over a spacer on a bolt installed through swashplate control horn. On some swashplates a pin, two washers, and cotter pin are used in lieu of spacer and bolt. Hook lower end of spring in proper hole of bracket so that spring does not go slack when swashplate horn is at lowest position. Make final adjustment as required by flight test

n . Inspect complete cyclic controls system for security and safetying of parts.

o. Check synchronized elevator for proper rigging. Adjust as necessary.

11-56. CYCLIC CONTROL STICK.

11-57. Description - Cyclic Control Stick. Two cyclic control sticks are installed. The grips are equipped with a trigger type (2 position) communications switch, a cargo hook release switch, and a force trim switch. The control sticks are identical except for an adjustable friction on the pilots stick. Linkage between cyclic control sticks and swashplate control horns includes push-pull tubes, bellcranks, control tubes, two force gradients with magnetic brakes, and two hydraulic actuators.

11-58. Inspectlon-Cyclic Control Stick (Installed). a. Inspect for binding, full travel and synchronization of pilots and copilots cyclic stick assemblies.

b. Inspect friction lock for restriction of cyclic stick movement and proper release.

c. Check boot for cuts, tears, deterioration and missing, loose or improperly installed hardware.

11-59 Removal-Cyclic Control Stick.

N O T E

Use this procedure to remove complete stick assembly, including support and lever.

N O T E

Ensure P22J Jumper is inserted into J22 receptacle, pin E to pin F, when copilots cyclic stick is removed.

a. Remove pilots and copilots seats (paragraph 2-218 or 2-249).

b. Remove screws (33, figure 11-13) and washers (12) to detach boot assembly (32) from floor.

c. Remove boot assembly (32) from cyclic control stick (2).

d. Remove access doors (65 and 69, figure 2-18).

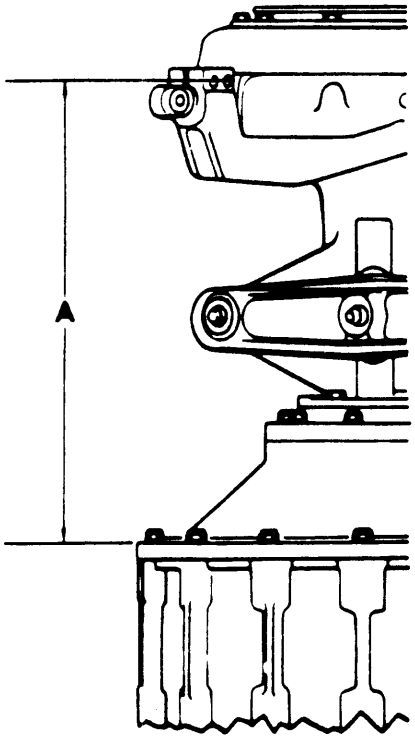

DIMENSION **A**

The dimension **A** measurement is measured from the machined surface where the bolts seat to the center line of the trunion retainer bolt holes.

LEFT HORN		RIGHT HORN
13.97 -13.91	1 DEG DOWN LEFT	14.19 - 14.13
13.92 - 13.86	1-1/2 DEG DOWN LEFT	14.23 - 14.18
13.86-13.80	2 DEG DOWN LEFT	14.30 - 14.24

Adjust from 1 degree to 2 degrees down left as required for satisfactory flight.

Personnel Hoist Rescue Missions Only with Hoist Installed on Right Side of Aircraft:

LEFT HORN		RIGHT HORN
13.6 -13.80	2 DEG DOWN LEFT	14.30 - 14.24
13.80-13.74	2.5 DEG DOWN LEFT	14.36 - 14.30

N O T E

Adjust left and right horn from 1 degree to 15 degrees down left with rescue hoist installed on left side of aircraft.

Figure 11-12. Swashplate Setting Dimensions

e. Disconnect cyclic control stick cable plug (31, figure 11-13) from receptacle on structure.

f. Remove cotter pins and nuts (34), washers (12) and bolts (27) attaching control tube (fore and aft) (35) and control tube (lateral) (28) to lever assembly (26).

g. Remove bolts (6) and washers (7) from support assembly (9).

h. Remove stick assembly (2) and support assembly (9).

11-60. Disassembly – Cyclic Control Stick. a. Remove screw (20, figure 11-13), lock washer (19), and clamp (18) attaching electric cable (31) to lever assembly (26).

b. Remove cotter pin (11), nut (17), washers (12), and bolt (24) attaching stick assembly (2) and lever assembly (26) and separate the parts.

c. Remove two cotter pins (11) nuts (10) washers (12), and bolts (8) attaching support assembly (9) to gimbal (14) and separate parts

d. Remove two cotter pins (11) nuts (13). washers (12), and bolts (21) attaching gimbal (14) to lever assembly (26) and separate parts.

e. Remove two bearings (22), two bearings (16). and shims (23).

11-61. Inspection — Cyclic Control Stick (Removed). a. Inspect bearings, (figure 11 -13) for wear and damage.

NOTE

For bearing tolerances, refer to paragraph 11-185.

b. Inspect bolts for thread damage.

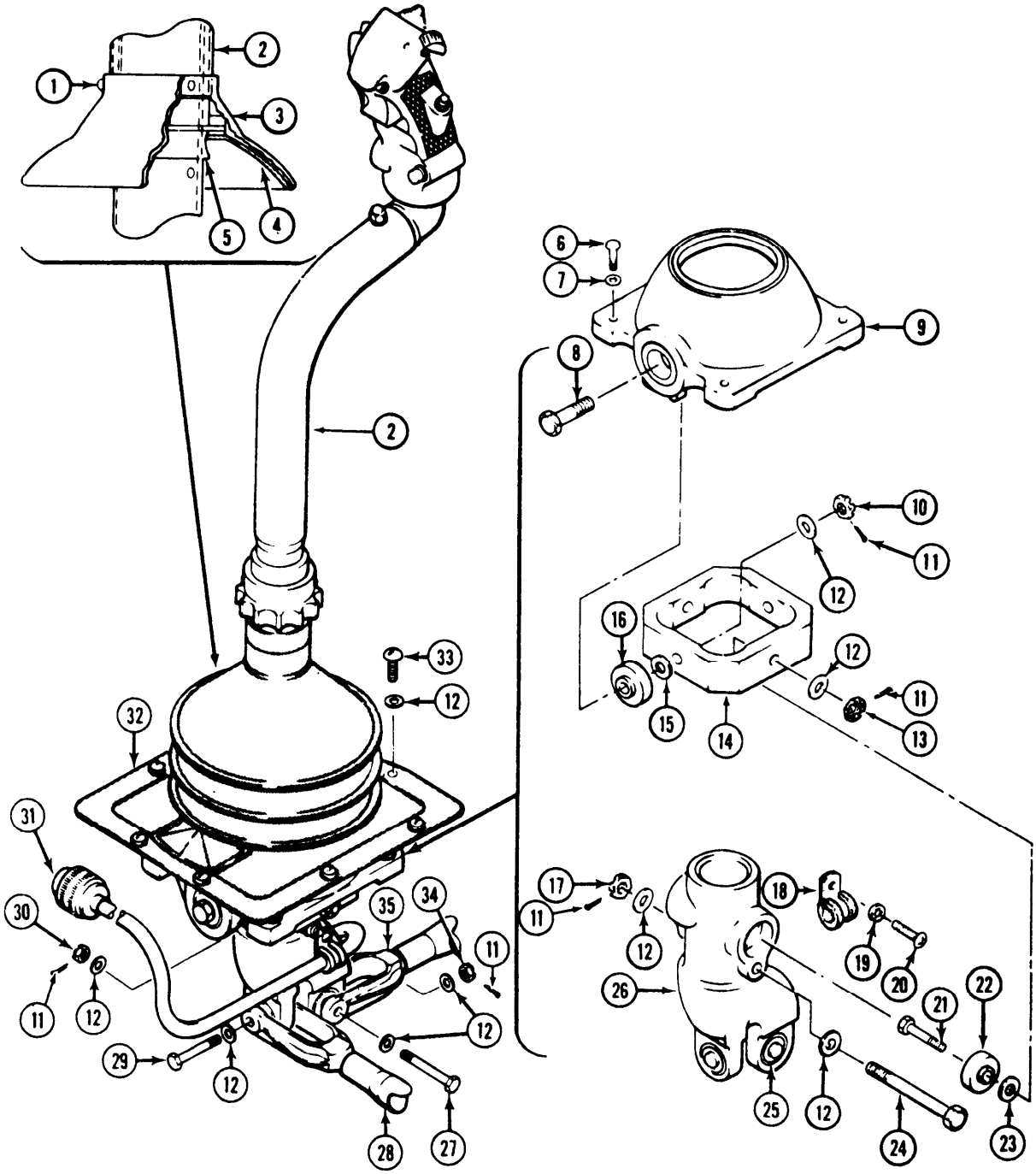

Figure 11-13. Cyclic Control Stick Assembly (Sheet 1 of 2)

1. Rivet
2. Stick assembly
3. Bell
4. Friction material
5. Collar
6. Bolt
7. Washer
8. Bolt
9. Support assembly
10. Nut
11. Cotter pin
12. Washer
13. Nut
14. Gimbal
15. Shim
16. Bearing
17. Nut
18. Clamp
19. Lockwasher
20. Screw
21. Bolt
22. Bearing
23. Shim
24. Bolt
25. Bearing and sleeve
26. Lever assembly
27. Bolt
28. Control tube (lateral)
29. Bolt
30. Nut
31. Electrical cable
32. Boot assembly
33. Screw
34. Nut
35. Control tube (fore and aft)

Figure 11-13. Cyclic Control Stick Assembly (Sheet 2 of 2)

c. Inspect cyclic control stick for loose, missing or improperly installed hardware.

d. Check boots for cuts, tears, and deterioration.

e. Inspect all components of cyclic control sticks for nicks, scratches, dents, broken or damaged tubing and frayed or broken cabling.

f. Elongation of bolt holes shall not exceed **0.001** inch on the diameter. Score marks on the inside surface of the holes maybe polished out for one fourth of the circumference of the hole, if the depth of the score is **0.002** inch or less.

11-62. Repair or Replacement - Cyclic Control Stick

N O T E

Do not attempt to repair any damaged components.

a. Replace bearings if worn, rough, or damaged (figures 11-13 and 11-14).

b. Replace electrical wires if frayed or broken.

c. Replace sheet felt (C113), (4, figure 11-13) in bell (3), if worn or damaged.

Warning

Cleaning materials are flammable and toxic. Avoid skin contact and breathing of solvent vapors.

(1) Scrape old sheet felt out of bell and clean with methyl-ethyl-ketone (C177).

(2) Apply cement (C59) to new friction material and install in bell (3).

d. Replace all parts that do not appear suitable for continued use.

11-63. Assembly - Cyclic control Stick

NOTE

Bolt heads (21, figure 11-13) must be installed inboard for step a.

a. Attach gimbal (14) to lever assembly (26) by installing two bearings (22), shims (23), and inserting bolts (21), securing with washers (12), nuts (13), and cotter pins (11).

NOTE

Bolt heads must be installed outboard for step b.

b. Attach gimbal (14) to support assembly (9) by installing two bearings (16), shims (15), inserting bolts (8) andsecuring with washers (12), nuts (10), and cotter pins (11).

NOTE

Insert stick assembly (2) so the fore and aft control tube attachment point is aft when the assembly is installed in helicopter.

c. Place stick assembly (2) through support assembly (9) into lever assembly (26) and secure by inserting bolt (24), washers (12), one under bolt head and one under nut (17) and insert cotter pin (11).

d. Position electrical cable (31) and secure with clamp (18) by installing screw (20) with lock washer (19).

11-64. Installation — Cyclic Control Stick.

NOTE

Use this procedure to install a stick assembly complete with support and lover.

a. Position cyclic control stick (2, figure 11-13) in place. Secure support assembly (9) to structure with four bolts (6) and washers (7).

b. Attach fore and aft (35) and lateral control tubes (28) to control stick lever (26) with bolts (27, 29) washers (12), nuts (34). Secure with cotter pin (11).

c. Connect and lockwire if applicable control stick electrical cable plug (31) to receptacle on structure below floor. Check that cable support clamp allows enough slack in cable for full stick travel only.

d. Install boot assembly (32), secured to floor with eight screws (31) and washers (12).

e. Install access doors (66, 68, 69, 70, 77 and 78, figure 2-18).

f. Install pilots and copilots seats (paragraph 2-223 or 2-252).

11-64.1 DESCRIPTION — TRIGGER DETENT MECHANISM.

11-64.2 The trigger detent mechanism is a device consisting of seven components which provides a “positive feel” for each of the two trigger switch positions.

11-64.3 OPERATION — TRIGGER DETENT MECHANISM.

11-64.4 As the trigger is depressed for “first stage make” it applies pressure to pin 7 (figure 11-13.9). Pin 7 compresses spring 6 which in turn offers resistance to the trigger through pin 7. See figure 11-13.1 for internal position of trigger detent mechanism components and figure 11-13.5 for approximate position of trigger at “first stage make.”

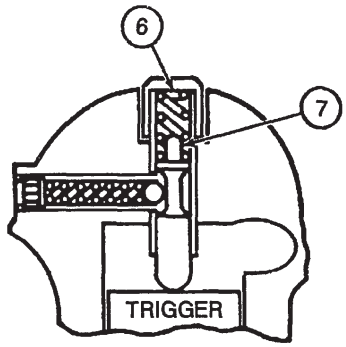

Figure 11-13.1. Internal Position of Trigger Detent Mechanism Components for “First Stage Make”

After “first stage make,” “peak detent” operation is influenced by screw 1, spring 3, and ball 4 (figure 11-13.9). Prior to “peak detent” ball 4 is seated in ball seat of pin 7. See figure 11-13.2 for identification of different areas of pin 7.

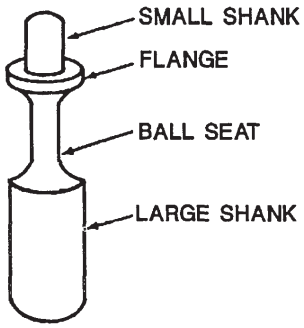

Figure 11-13.2. Pin 7 (PM 21217) Area Identification

To reach “peak detent” continue depression of trigger and ball 4 (figure 11-13.9) will ride up radius of ball seat depressing spring 3 (figure 11-13.9) and onto large shank of pin 7 (figure 11-13.9). See figure 11-13.3 for internal position of trigger detent mechanism components and figure 11-13.5 for approximate position of trigger at “peak detent.”

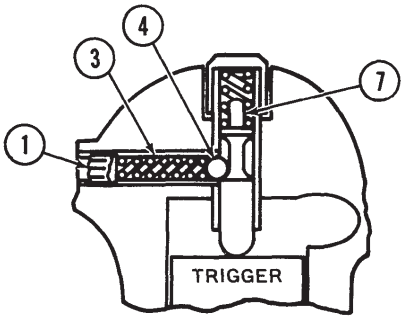

Figure 11-13.3. Internal Position of Trigger Detent Mechanism Components for “Peak Detent”

When ball 4 (figure 11-13.9) leaves ball seat of pin 7 (figure 11-13.7) and rides up onto large shank of pin 7, a decrease in trigger pressure will be felt. At this point trigger pressure is from compression of spring 6 (figure 11-13.9) only. Continued depression of trigger will bring “second stage make.” See figure 11-13.4 for internal position of trigger detent mechanism components and figure 11-13.5 for approximate position of trigger at “second stage make.”

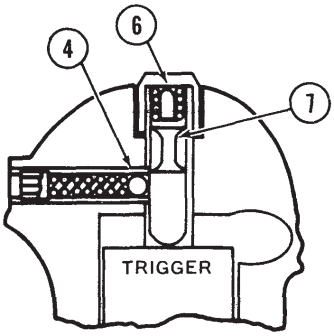

Figure 11-13.4. Internal Position of Trigger Detent Mechanism Components for “Second Stage Make”

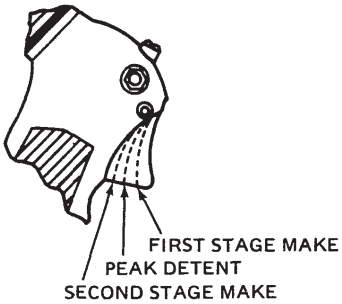

Figure 11-13.5. Approximate Trigger Position

11-64.5 DISASSEMBLY — TRIGGER DETENT MECHANISM.

11-64.6 Disassembly of trigger detent mechanism may be required for the following reasons:

a. Inspection of trigger detent mechanism components.

b. Lubrication of pin 7 and ball 4 (figure 11-13.9).

c. Replacement of trigger detent mechanism components.

CAUTION

Trigger should be left in grip handle during disassembly of trigger detent mechanism components to prevent loss of ball 4 (figure 11-13.9) into interior of grip.

11-64.7 Remove screw 1 and/or 1a, this will allow the removal of spring 3 and ball 4. See figure 11-13.9 for part identification and location. Inspect insert PM21265 (figure 11-13.9) in accordance with paragraph 11-64.10e.

11-64.8 Remove nut 5 or 5a (figure 11-13.9), this will allow the removal of spring 6 and pin 7 (figure 11-13.9). See figure 11-13.9 for part identification and location. Inspect all components and insert PM21264 (figure 11-13.9) in accordance with paragraph 11-64.10 c, e, f.

NOTE

If it is determined that any component of the trigger detent mechanism is worn or defective, replace all components of the trigger detent mechanism.

11-64.9 INSPECTION – TRIGGER DETENT MECHANISM.

11-64.10 Operate the trigger to insure that there is no binding. If binding occurs check the following:

a. Lubrication of pin 7 and ball 4 (figure 11-13.9) (see paragraphs 3-4 and 3-7).

b. Adjust trigger forces (see paragraphs 3-11 through 3-16).

c. Pin 7 (figure 11-13.9) may have a burr worn up between ball seat radius and large shank (see figure 11-13.6). If so, replace all components of trigger detent mechanism.

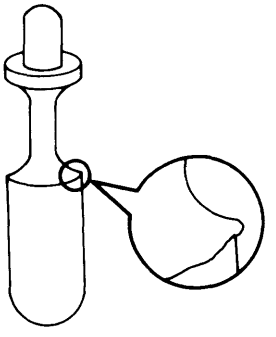

Figure 11-13.6
Burr Worn Up On Pin 7 (PM 21217)

d. Insert PM21265 may have corner wear from contact with ball 4 (figure 11-13.9) due to poor adjustment (see figure 11-13.7). If so return grip handle to Bendix for insert replacement.

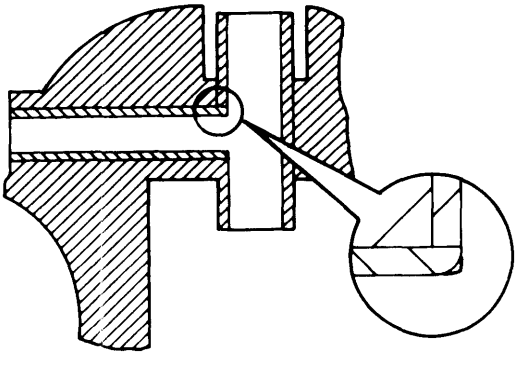

Figure 11-13.7
Corner Wear on Insert (PM 21265)

e . Check inserts PM21265 and PM21264 for thread mutilation. If mutilation is present, remove and replace grip assembly.

f. Check insert PM21264 to see if it is bent or deformed. If so, remove and replace grip assembly.

11-64.11. INSTALLATION – TRIGGER DETENT MECHANISM.

11-64.12 Trigger and switch must be installed into grip handle prior to installation of trigger detent mechanism. Follow installation instructions pertaining to each grip handle.

11-64.13 Layout and identify all parts of detent mechanism kit. For identification and positioning of parts for installation see figure 11-13.9.

11-64.14 Apply a thin film of lubrication (C126) to pin 7 (figure 11-13.9). Place pin 7 into insert (PM21264) (figure 11-13.9) located at the top of grip handle.

11-64.15 Place spring 6 (figure 11-13.9) (short spring) into insert (PM21264) above pin 7. Spring 6 will seat over small shank and rest on flange of pin 7.

11-64.16 Thread nut 5 or 5a (figure 11-13.9) onto insert (PM21264) (figure 11-13.9) a few turns to retain pin 7 and spring 6.

11-64.17 Apply a thin film of lubrication (C126) to ball 4 (figure 11-13.9). Install ball 4 into insert (PM21265) located on side of grip handle.

11-64.18 Place spring 3 (figure 11-13.9) (long spring) into insert (PM21265) (figure 11-13.9) Spring will be seated on top of ball 4.

11-64.19 Thread nut 2 (figure 11-13.9) onto screw 1 about ¼ of an inch. If you are using screw 1a, do not use nut 2.

11-64.20 Thread screw 1 or 1 a (figure 11-13.9) into insert (PM21265) (figure 11-13.9) Thread only a few turns initially as it is used for adjustment of trigger detent force in later operation.

11-64.21 ADJUSTMENT OUTRIGGER DETENT MECHANISM.

11-64.22 Actuate trigger several times to assure smooth action.

11-64.23 Check all three trigger actuation forces using a suitable spring guage. See Table 11-1.1 below:

Table 11-1.1. Trigger Actuation Forces

A.	First Stage Make	2.25 ± 0.50lbs.
B.	Peak Detent	7.50 ± 0.50 lbs.
C.	Second Stage Make	5.00 ± 1.00 lbs.

11-64.24 To adjust "first stage make":

a. To increase force, tighten (clockwise) nut 5 or 5a, check force with spring gage.

b. To decrease force loosen nut 5 or 5a (figure 11-13.9) (counter-clockwise). Check force with spring gage.

11-64.25 To adjust "peak detent":

a. To increase force, tighten (clockwise) screw 1 or 1a, check force with spring gage.

b. To decrease force, loosen screw 1 or 1a (figure 11-13.9) (counter-clockwise). Check force with spring gage.

11-64.26 To adjust "second stage make" follow procedure as described in 11-64.14a and 11-64.15b.

11-64.27 TESTING TRIGGER DETENT MECHANISM.

11-64.28 After forces have been set, actuate trigger several times to insure that there is no binding, recheck all forces in accordance with Table 11-1.1., using spring gage. Make adjustments if needed.

11-64.29 Apply sealant (C22) around nut 5 or 5a in recessed area of grip handle.

11-64.30 Hold screw 1 in place and secure locknut 2 up to grip handle.

11-64.31 If screw 1 and nut 2 are used apply small amount of glyptol around screw 1 thread at top of nut 2. Glyptol is used as a device to determine if the detent adjustment has been tampered with. See figure 11-13.8.

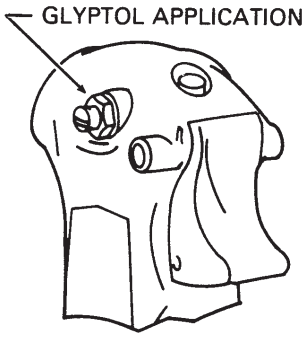

Figure 11-13.8.
Apply Glyptol to Screw and Nut.

11-65. TUBE AND LEVER ASSEMBLY — CYCLIC CONTROLS.

11-66. Description — Tube and Lever Assembly — Cyclic Controls. Two control tubes and lever assemblies are mounted under the floor and forward of the pilot seats. These are segments of linkage between cyclic control sticks and swashplate control horns.

Premaintenance Requirements for Tube and Lever Assembly–Cyclic Controls

Conditions	Requirements
Model	All
Part No. or Serial No.	All
Special Tools	None
Test Equipment	Eddy Current Inspection Unit
Support Equipment	None
Minimum Personnel Required	Two
Consumable Materials	None
Special Environmental Conditions	None
References	TM 1-1520-256-23

11-67. Inspection — Tube and Lever Assembly — Cyclic Controls (Installed).

a. Inspect tube and lever assembly (13 and 14, figure 11-14) for binding.

b. Inspect bearing in arm assembly (19) figure 11-14) for **0.012** inch radial and **0.030** inch axial maximum allowable wear.

c. Maximum allowable lateral play on tube and lever assembly (13 and 14) is 0.200 inch.

d. Inspect tube and lever assembly (13 and 14) for corrosion, cracks, nicks, and scratches. No cracks allowed. If a crack in the Tube and Lever Assembly is suspected, refer to TM 1-1520-256-23, Technical Manual Aviation Unit Maintenance (AVUM) and Aviation Intermediate Maintenance (AVIM) manual nondestructive inspection procedures for UH-1 helicopter series.

	Part Number	Description
1	PM21220	Screw
1a	PM21220-1	Screw
2	PM21639	Nut
3	PM21219	Spring
4	PM21638	Ball
5	PM21222	Screw
5a	PM21222-1	Nut
6	PM21218-1	Spring
7	PM21217	P i n

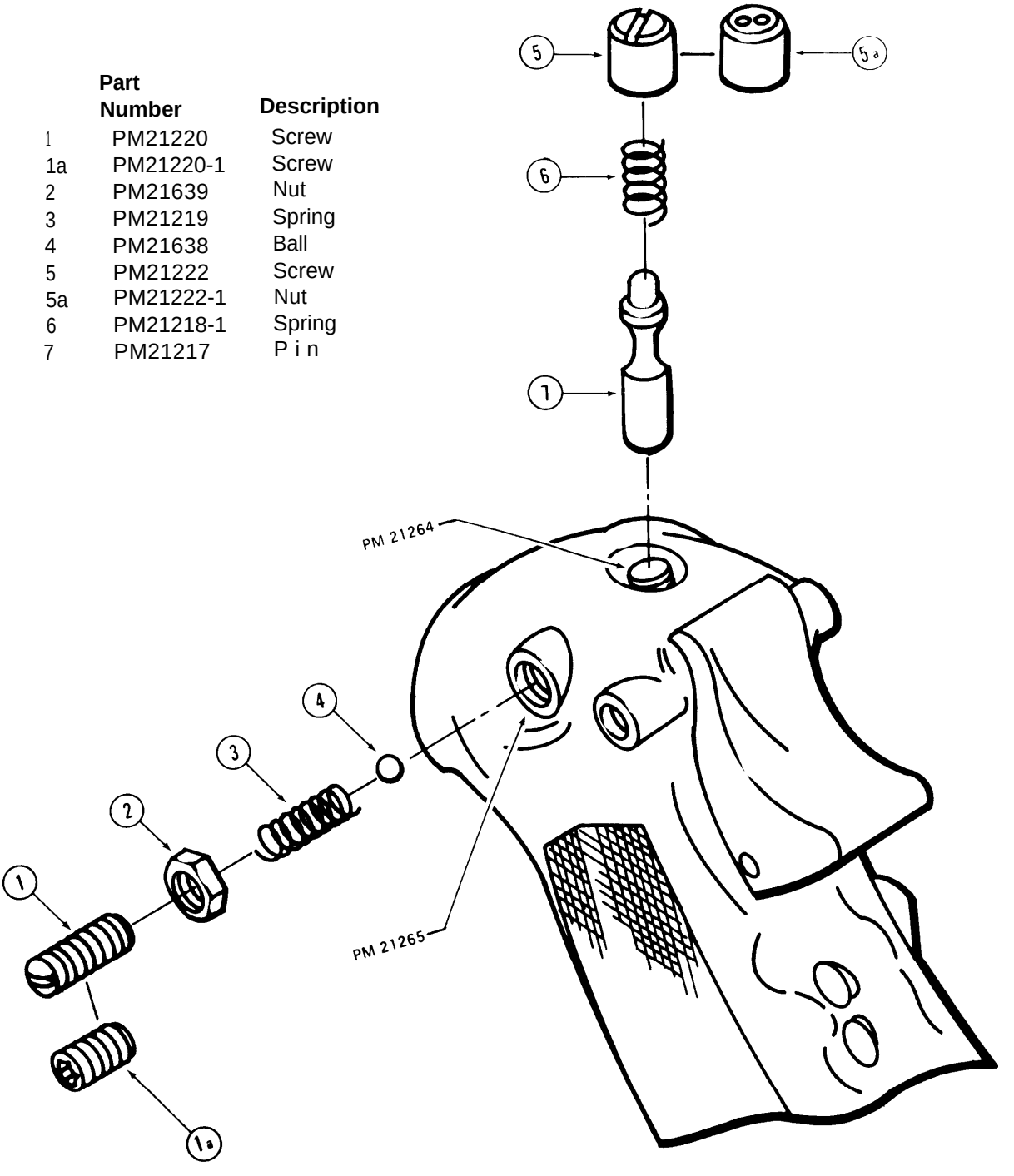

Figure 11-13.9
Exploded View of Trigger Detent Mechanism Components

11-68. Removal –Tube and Lever Assembly – Cyclic Controls.

N O T E

Parts of control system can be removed separately as need occurs, or completely in practical sequence. Take precaution, against damage by accidental movement of linkage while disconnected.

a. Remove pilots and copilots seats (paragraph 2-218 or 2-249).

b. Remove access doors (40, 64, 65, 66, 68, 69, and 70, figure 2-18) from cabin floor and lower skin of fuselage.

c. Remove cotter pin (8, figure 11-14), and nut (23), washer (30), and bolt (32) attaching tube assembly (33) to tube and lever assembly (31),

d. Remove cotter pin (6), nut (18), washer (16), and bolt (15) attaching tube assembly (17) to arm assembly (19).

e. Remove cotter pin (6), nut (28), washer (26), and bolt (25) attaching tube assembly (27) to tube and lever assembly (20).

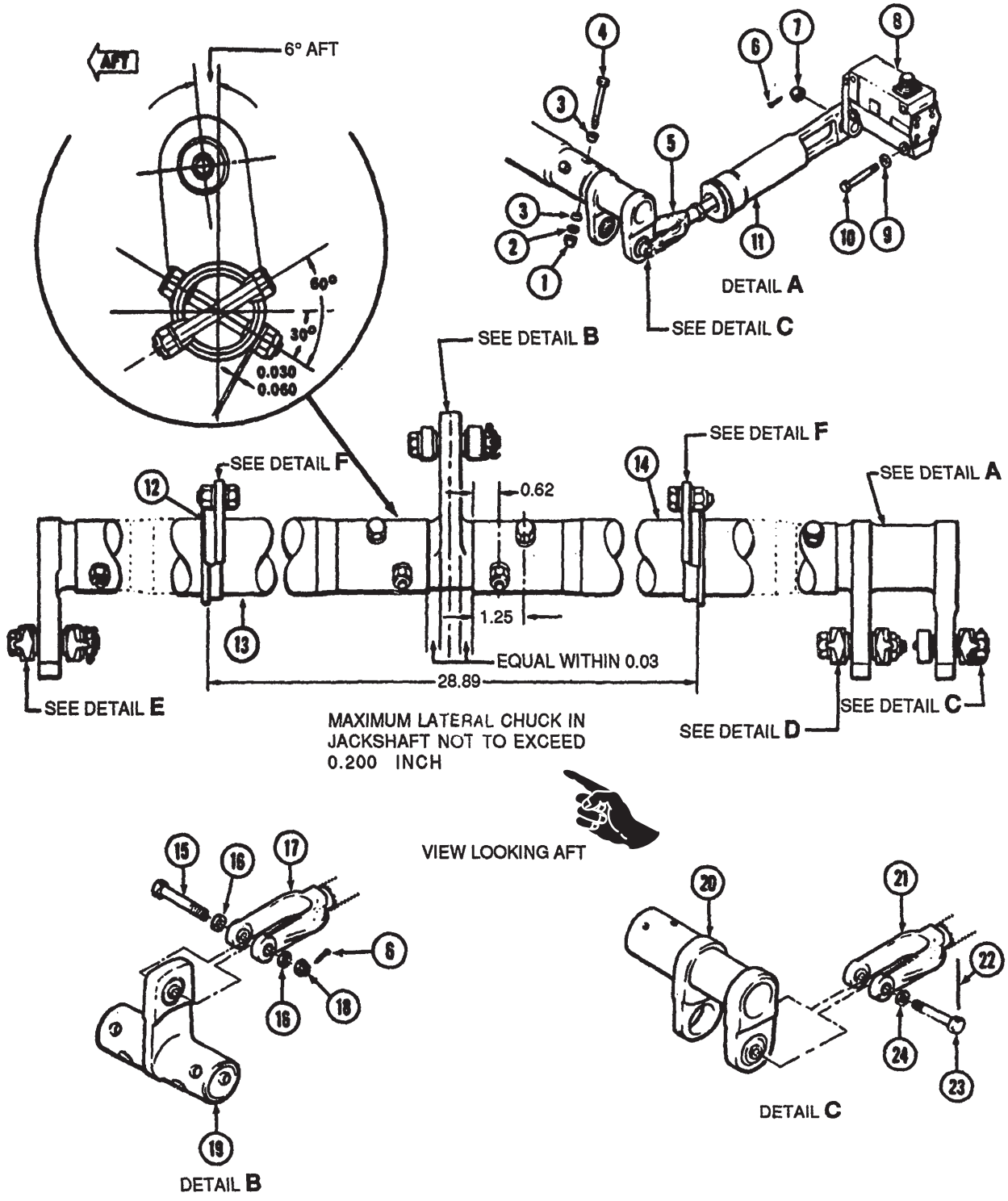

Figure 11-14. Cyclic Control Tube and Lever Assembly (Sheet 1 of 2)

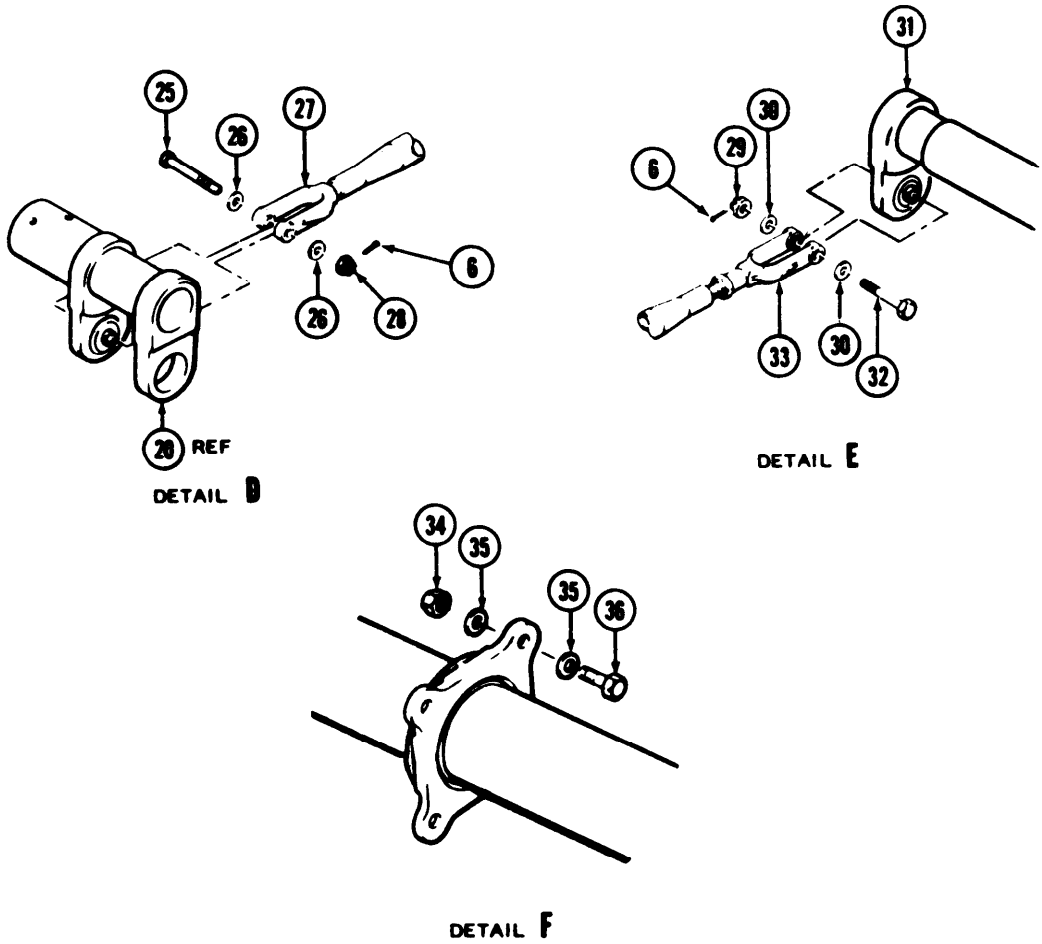

1. Nut
2. Washer
3. Tapered bushing
4. Bolt
5. Clevis assembly
6. Cotter pin
7. Nut
8. Magnetic brake
9. Washer
10. Bolt
11. Force gradient – fore-and-aft
12. Housing Assembly
13. Tube and lever assembly
14. Tube and lever assembly
15. Bolt
16. Washer
17. Tube assembly
18. Nut
19. Arm assembly
20. Tube and lever assembly
21. Clevis assembly
22. Lockwire
23. Bolt
24. Washer
25. Bolt
26. Washer
27. Tube assembly
28. Nut
29. Nut
30. Washer
31. Tube and lever assembly
32. Bolt
33. Tube Assembly
34. Nut
35. Washer
36. Bolt

Figure 11-14. Cyclic Control Tube and Lever Assembly (Sheet 2 of 2)

f. Remove lockwire, washer (24), and bolt (23) attaching clevis assembly (21) to tube and lever assembly (20).

g. Remove bolts (4), washers (2), tapered bushings (3), and nuts (1) from each side of tube and lever assembly (20). Identify bolts and tapered bushings for reinstallation in same location.

h. Remove bolts (36), washers (35), and nuts (34) attaching housing assemblies (12) to beam. Withdraw tube and lever assemblies (13 and 14) through access openings.

11-69. Disassembly — Tube and Lever Assembly — Cyclic Controls. Identify parts for reassembly in same locations.

CAUTION

Parts are match drilled and shall not be intermixed.

a. Remove bolts (4, figure 11-14) washers (2), tapered bushings (3) attaching components of tube and lever assembly (13 and 14).

b. Remove tube (13 and 14) from lever or arm.

Premaintenance Requirements for Tube and Level Assembly-Cyclic

Conditions	Requirements
Model	All
Part No. or Serial No.	All
Special Tools	None
Test Equipment	Eddy Current Inspection Unit
Support Equipment	None
Minimum Personnel Required	Two
Consumable Materials	None
Special Environmental Conditions	None
References	TM 1-1520-256-23

11-70. Inspection — Tube and Lever Assembly — Cyclic Controls (Removed).

a. Maximum allowable elongation of bushing hole is **0.003** inch.

b. Maximum allowable wear on tube and lever assembly bearings is **0.010** inch radial.

c. Inspect tube and lever assembly for corrosion, cracks, nicks and scratches. No cracks allowed. If a crack in the Tube and Lever Assembly is suspected, refer to TM 1-1520-256-23, Technical Manual Aviation Unit Maintenance (AVUM) and Aviation Intermediate Maintenance (AVIM) manual nondestructive inspection procedures for UH-1 helicopter series.

d. Inspect bearing in arm assembly (19, figure 11-14) for **0.012** inch radial and **0.030** inch axial maximum allowable wear.

11-71. Repair or Replacement — Tube and Lever Assembly — Cyclic Controls (AVIM).

a. Replace worn or rough bearings and damaged or unserviceable parts (figure 11-14).

b. Replace all parts that do not meet inspection requirements.

11-72. Installation— Tube and Lever Assembly — Cyclic Controls.

a. Inspect structural intercostal mounting surfaces of housing assembly (12, figure 11-14) to determine if tape (C278) is torn or missing. Install new tape if torn or missing.

NOTE

Tape (C278) shall cover the entire mating surface area of one of the parts. Also, it shall extend at least 1/4 inch beyond the joint edges.

b. Align marks previously indexed on tubes and levers. Insert tube and lever assemblies (13 and 14, figure 11-14) with housing assemblies (12) in place, through access openings at sides of cabin lower skin.

c. Slip ends of tube and lever assemblies (13 and 14) on shafts of arm assembly (19).

d. Align bolt holes with center arm pointing up and end down. If new tube and lever assemblies (13 and 14) are being installed, line ream holes for bolts (4) using taper reamer (T87).

e. Apply primer (C312) on tapered bushings (3) and mounting surfaces on tube and lever assemblies (13 and 14).

CAUTION

Do not intermix parts. Parts are drilled and matched during assembly.

f. Install bolts (4), tapered bushings (13), washers (2), and nuts (1). Torque bolts **50 TO 70** inch-pounds. Check **0.030 TO 0.060** clearance between tube and washer as noted on figure 11-14.

g. Secure housing assemblies (12) to each beam by installing bolts (36), washers (35), and nuts (34). Flat or tapered shims, maximum thickness of **0.063** inch, may be installed between beam and housing (12) to obtain proper chuck and to eliminate binding caused by misaligned beams. Check for free operation.

NOTE

If shims are installed between housing (12) and beam, tape (C278) shall be installed between housing and shim and between shim and beam. Tape (C278) shall cover the entire mating surface and shall extend at least 1/4 inch beyond the joint edges.

h. Install bolt (23) washers (24) to attach clevis assembly (21) to tube and lever assembly (20). Secure with lockwire (C155).

NOTE

If adjustable control tubes are not correct length to be attached, leave one end free until controls are rigged.

i. Install bolt (25), washer (26), and nut (28) to attach tube assembly (27) to tube and lever assembly (20). Secure with cotter pin (6).

j. Install bolt (15) from right side, washer (16), and nut (18) to secure tube assembly (17) to arm assembly (19). Secure with cotter pin (6).

k. Install bolt (32), washer (30), and nut (29) to install tube assembly (33) to tube and lever assembly (31). Secure with cotter pin (6).

l. Install access doors (40, 64, 65, 66, 68, 69, and 70, figure 2-18) in cabin floor and lower skin of fuselage.

m. Install pilots and copilots seats (paragraph 2-223 or 2-252).

11-72.1 SUPPORT ASSEMBLIES.

11-72.2 Description — Support Assemblies. Two hydraulic cylinder support assemblies (figure 11-14.1) (located left and right side, and below transmission assembly) are provided for support of two cyclic and collective cylinder assemblies. The supports are attached to the cabin structure and top side of cargo lift beam.

11-72.3 Removal — Support Assemblies (AVIM).

a. Remove support assembly (18, figure 11-14.1) as follows:

(1) Remove soundproofing blanket and left access doors (23 and 24, figure 2-18) from pylon area.

(2) Remove cyclic and collective control hydraulic cylinder assemblies (33, figure 7-11) and (6, figure 7-23) (paragraphs 7-71 and 7-84).

(3) Remove droop compensator jackshaft and support from support assembly (18, figure 11-14.1) (paragraph 4-126).

(4) Remove wire bundle and battery cables routed through support assembly (18).

(5) Remove plug button located outboard of nut (13) on left side of cabin pylon structure.

(6) Remove nuts (13), washers (12) and bolts (11) attaching support assembly (18) to pylon structure.

(7) Remove nuts (14), washers (10) and bolts (9) attaching support assembly (18) to top of lift beam.

(8) Remove nuts (15), washers (16) and bolts (17) attaching support assembly (18) to pylon structure. Lift, rotate and remove support assembly (18) through access opening (24, figure 2-18),

b. Remove support assembly (3, figure 11-14.1) as follows:

(1) Remove soundproofing blanket and right side access doors (24 and 31, figure 2-18) from pylon island in cabin area.

(2) Remove cyclic hydraulic cylinder assembly (33, figure 7-11) (paragraph 7-71).

(3) Remove nuts (8, figure 11-14.1), washers (7) and bolts (6) attaching support assembly (3) to top of cargo lift beam.

(4) Remove nuts (19), washers (5) and bolts (4) attaching support assembly (3) to top of cargo lift beam.

(5) Remove nuts (1), washers (2) and bolts (20) attaching support assembly (3) to cabin structure. Lift and remove support assembly through access opening (24, figure 2-18).

Premaintenance Requirements for Support Assemblies

Conditions	Requirements
Model	All
Part No. or Serial No.	All
Special Tools	None
Test Equipment	Eddy Current Inspection Unit
Support Equipment	None
Minimum Personnel Required	Two
Consumable Materials	None
Special Environmental Conditions	None
References	TM 1-1520-256-23

11-72.4 Inspection — Support Assemblies (AVIM).

a. Inspect support assembly (3, figure 11-14.1) in accordance with damage limits outlined in figure 11-14.2 and table 11-2. If a crack in the Support Assemblies for the Hydraulic Cylinder Assembly is suspected, refer to TM 1-1520-256-23, Technical Manual Aviation Unit Maintenance (AVUM) and Aviation Intermediate Maintenance (AVIM) manual nondestructive inspection procedures for UH-1 helicopter series.

b. Inspect support assembly (18) in accordance with damage limits outlined in figure 11-14.3 and table 11-2. If a crack in the Support Assemblies for the Hydraulic Cylinder Assembly is suspected, refer to TM 1-1520-256-23, Technical Manual Aviation Unit Maintenance (AVUM) and Aviation Intermediate Maintenance (AVIM) manual nondestructive inspection procedures for UH-1 helicopter series.

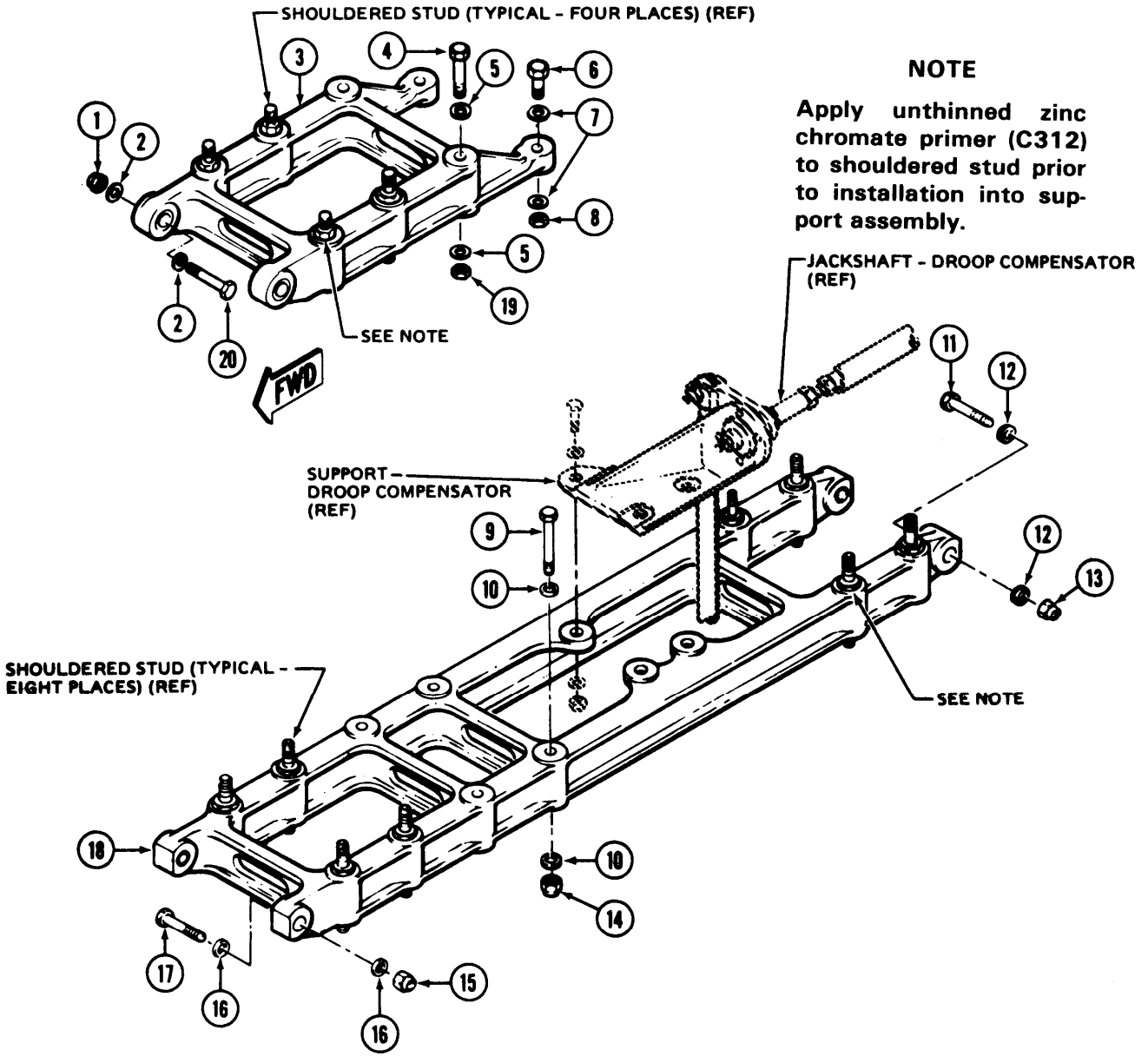

1. Nut
2. Washer
3. Support assembly
4. Bolt
5. Washer
6. Bolt
7. Washer
8. Nut
9. Bolt
10. Washer
11. Bolt
12. Washers
13. Nut
14. Nut
15. Nut
16. Washers
17. Bolt
18. Support assembly
19. Nut
20. Bolt

Figure 11-14.1. Support Assembly — Hydraulic Cylinder Assembly — Removal and Installation

Table 11-2. Inspection Requirements for Support Assemblies (AVIM)

FIGURE 11- AND INDEX NO.	NOMENCLATURE	METHOD OF INSPECTION			TYPICAL DEFECTS	REFERENCE PARAGRAPH		REMARKS
		VISUAL	*MAGNETIC PARTICLE	**PENETRANT		INSPECTION	REPAIR	
14.1 3	Support Assembly	X		X	Nicks, scratches, cracks, warped, corrosion, and hole elongation.	11-72.4 and figure 11-14.2	11-72.6 and figure 11-14.2	
14.1 18	Support Assembly	X		X	Nicks, scratches, cracks, corrosion, warped and hole elongation.	11-72.4 and figure 11-14.3	11-72.6 and figure 11-14.3	

*Magnetic particle inspect in accordance with MIL-I-1949 and TM 55-1500-204-25/1.
**Fluorescent penetrant inspect in accordance with MIL-I-6866 and TM 55-1500-204-25/1.

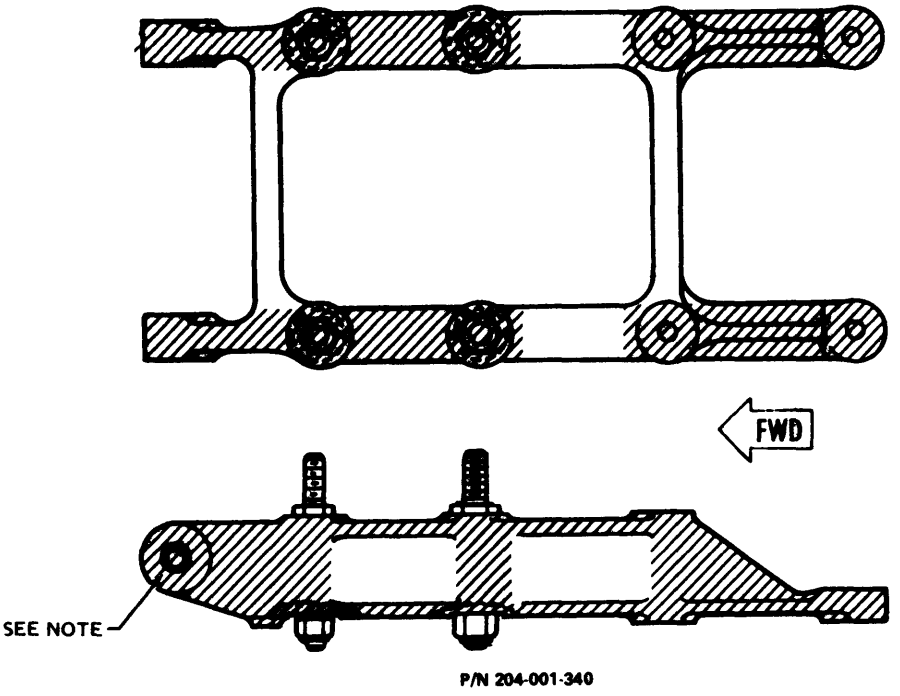

NOTE: Bore elongation does not apply to this hole.

TYPE OF DAMAGE	DAMAGE AREA AND REPAIR ZONES	
MECHANICAL: NICKS, SCRATCHES, ETC.	0.020 INCH	0.030 INCH
CORROSION	0.010 INCH	0.015 INCH
MAXIMUM AREA PER FULL DEPTH REPAIR	0.25 SQUARE INCH	0.50 SQUARE INCH
MAXIMUM NUMBER OF REPAIRS	TWO PER SEGMENT	
EDGE CHAMFER	0.040 INCH	0.060 INCH
SURFACE COATING	BRUSH ALODINE	
BORE REPAIR	0.002 – ONE-QUARTER CIRCUMFERENCE	
THREAD DAMAGE:		
DEPTH:	ONE-THIRD OF THREAD	
LENGTH:	ONE-TENTH INCH	
NUMBER:	ONE PER THREADED SEGMENT	
BORE ELONGATION:	0.0015 INCH MAXIMUM	
CRACKS	NONE ALLOWED	

Figure 11-14.2. Support assembly (P/N 204-001-340), Hydraulic Cylinder Assembly – Damage Limits

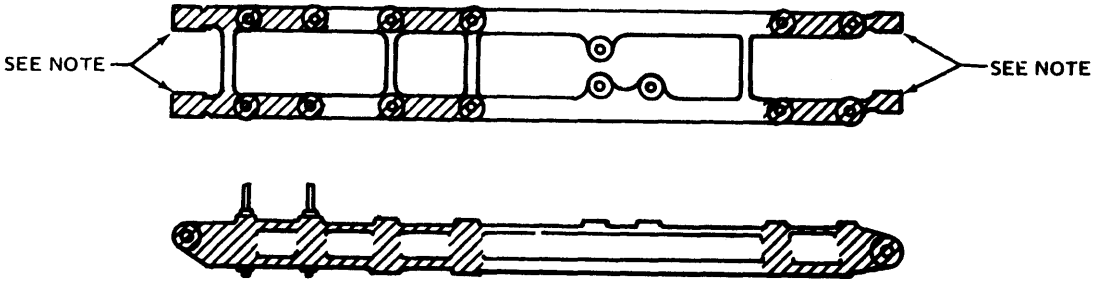

P/N 204-001-303

NOTE: Bore elongation does not apply to these holes

	DAMAGE AREA AND REPAIR ZONES	
TYPE OF DAMAGE	▨	▭
MECHANICAL: NICKS, SCRATCHES, ETC.	0.020 INCH	0.030 INCH
CORROSION	0.010 INCH	0.015 INCH
MAXIMUM AREA PER FULL DEPTH REPAIR	0.24 SQUARE INCH	0.50 SQUARE INCH
MAXIMUM NUMBER OF REPAIRS	TWO PER SEGMENT	
EDGE CHAMFER	0.040 INCH	0.060 INCH
SURFACE COATING	BRUSH ALODINE	
BORE REPAIR	0.002 – ONE-QUARTER CIRCUMFERENCE	
THREAD DAMAGE:		
DEPTH:	ONE-THIRD OF THREAD	
LENGTH:	ONE-TENTH INCH	
NUMBER:	ONE PER THREADED SEGMENT	
BORE ELONGATION:	0.0015 INCH MAXIMUM	
CRACKS	NONE ALLOWED	

Figure 11-14.3. Support Assembly (P/N 204-001-303). Hydraulic Cylinder Assembly – Damage Limits

11-72.5. Cleaning.- Support Assemblies.

WARNING

Cleaning materials are flammable and toxic. Avoid skin contact and breathing of solvent vapors.

a. Clean support assemblies (3 and 18 figure 11-14.1) with solvent (C261). A nonmetallic, soft bristle brush may be required to dislodge stubborn deposits.

b. Rinse support assemblies with clean water and allow to air dry.

11-72.6. Repair — Support Assemblies (AVIM). a. Any damage to support assembly (3, figure 11-14.1) exceeding limits outlined in figure 11-14.2 requires replacement of part. No cracks allowed.

WARNING

Chemical film material and primers are flammable and toxic. Provide adequate ventilation. Do not use near fire or open flame.

b. Polish nicks, scratches or corrosion to original surface finish with 600 grit sandpaper (C232). Treat repair area with chemical film material (C62) followed with a light application of primer (C312) or primer (C206).

c. Thread damage, bent, or corrosion, to studs of support assemblies (3 or 18) requires replacement of part. Apply primer (C312) to replacement stud prior to installation to support.

d. Any damage to support assembly (18) exceeding limits outlined in figure 11-14.3 requires replacement of part. No cracks allowed.

e. Polish, treat, and touchup damaged repaired areas of support assembly (18) as outlined in above step b.

11-72.7. Installation — Support Assemblies (AVIM). a. Install support assembly (3, figure 11-14.1) as follows:

N O T E

Do not tighten nuts (1, 8 and 19) until all bolts (4, 6 and 20) are installed with unthinned wet primer (C312) in support assembly (3).

(1) Position support assembly (3) between attachment supports of pylon structure and align holes in support assembly with holes in top of cargo lift beam. Place washer (5) on bolts (4). Apply a light coat of primer (C312) to bolts and install bolts through support assembly (3) and cargo lift beam.

(2) Place a washer (2) on each of bolts (20). Apply a light coat of primer (C312) to bolts and install bolts through support assembly (3) and supports of pylon structure.

(3) Place a washer (7) on each of two bolts (6). Apply a light coat of primer (C312) to bolts and install bolts through support assembly (3) and top of lift beam.

(4) Install washers (2, 5 and 7), and nuts (1,8 and 19) on bolts (4, 6 and 20) and tighten nuts.

(5) Install hydraulic cylinder assembly (33, figure 7-11) (paragraph 7-78).

(6) Install right side access doors (24 and 25, figure 2-18) and soundproofing blanket to pylon island in cabin area.

b. Install support assembly (18, figure 11-14.1) as follows:

NOTE

Do not tighten nuts (13, 14 and 15) until all bolts (9, 11 and 17) are installed with unthinned wet primer (C312) in support assembly (18).

(1) Position support assembly (18) between forward and aft attachment supports of pylon structure and align holes in support assembly with holes in top of lift beam. Place a washer (10) on each of four bolts (9). Apply a light coat of unthinned primer (C312) to bolts and install bolts through support assembly (18) and lift bean.

(2) Place washer (12) on bolts (11). Apply a light coat of unthinned primer (C312) to bolts and install bolts through support assembly (18) and supports of pylon structure.

(3) Place washers (16) on bolts (17). Apply a light coat of unthinned primer (C312) to bolts and install bolts through support assembly (18) and supports of pylon structure.

(4) Tighten nuts (13, 14 and 15).

(5) Install (lateral) hydraulic cylinder assembly (6, figure 7-11) (paragraph 7-78, step b).

(6) Install (collective) hydraulic cylinder assembly (6, figure 7-23) (paragraph 7-91).

(7) Install droop compensator bracket and jackshaft to support assembly (18) (paragraph 4-132).

(8) Route and install wire bundle and battery cables up through support assembly (18).

(9) Install plug button in hole, located outboard of nut (13) on left side of cabin pylon structure.

(10) Service and bleed hydraulic system (paragraph 7-6).

(11) Perform operational check and test of hydraulic system and hydraulic cylinder assemblies (6 and 33, figure 7-11) and (6, figure 7-23) (pararaphs 7-3 and 7-4).

(12) Inspect hydraulic cylinder assemblies (6 and 33, figure 7-11) and (6, figure 7-23) and attaching hose connections for leaks (table 7-1).

(13) Install left access doors (23 and 24, figure 2-18) and soundproofing to pylon island in cabin area.

11-73. MAGNETIC BRAKE-CYCLIC CONTROLS.

11-74. Description-Magnetic Brake Cyclic Controls. A magnetic brake used in conjunction with a force gradient assembly is mounted in each control element: the fore and aft cyclic, the lateral cyclic and the tail rotor pitch control. All three assemblies are identical except for the position of the arm on the brake. By positioning one of the letters “D”, “L”, or “F relative to the brake shaft, the brake may be used in either the D-irectional, L—ateral, or F-ore and aft control assembly (figure 11-15).

11-75. Rigging—Magnetic Brake Cyclic Controls. a. Rig the fore and aft cyclic, lateral cyclic, and tail rotor pitch control magnetic brakes as follows:

CAUTION

Some magnetic brakes. P/N 204-001-376-3 have external stops. Ensure that when removing the arm from the shaft that the stop is not accidentally removed. If the stop has been removed, reinstall the stop, attaching hardware, and check for proper stop alignment as illustrated in figure 11-15.

(1) Place arm of lateral magnetic brake at center of travel. With cyclic stick in neutral, adjust link on lateral force gradient (4, figure 11-11) to fit and connect.

(2) Place and hold cyclic stick against forward stop. Place arm of fore-aft magnetic brake against aft stop. Adjust fore-aft force gradient (9, figure 11-11) to fit. Extend clevis fitting 3-1/2 turns and connect.

(3) Place directional control arm at center of travel and with control pedals held in neutral, adjust force gradient tube to fit and connect.

b. Attach force gradient assembly to brake arm with nut (7) and secure with cotter pin (6). Connect electrical plug to brake body and secure with lockwire (C155).

c. Check flight controls for unobstructed full travel.

11-76. Inspection-Magnetic Brake Cyclic Controls (Installed). a. Check flight controls for unobstructed full travel.

b. Check assembly for corrosion, unobstructed travel, cannon plug safetying.

c. Check for loose, missing or improperly installed hardware.

11-77. Removal-Magnetic Brake--Cyclic Controls. a. Disconnect electrical plug from brake body.

b. Remove cotter pin and nut (7, figure 11-14) attaching force gradient (11) to brake (8) arm.

c. Remove our bolts (10) and washers (9) attaching magnetic brake (8) structure.

11-78. Repair or Replacement — Magnetic Brake — Cyclic Controls. a. Replace magnetic brake assemblies having malfunction that will not allow unobstructed full travel for cyclic controls.

b. Deleted.

c. Deleted.

11-79. Installation — Magnetic Brake Cyclic Controls. a. Mount brake arm on brake (paragraph 11-73). Secure arm with retaining bolt.

b. Position brake in place on structure and install mounting bolts (10, figure 11-14) and washers (9).

c. Connect electrical plug to brake body and secure with lockwire (C155).

d. Rig magnetic brake cyclic controls.

11-80. FORCE GRADIENT CYCLIC CONTROLS.

11-81. Description — Force Gradient Cyclic Controls. Two force gradient assemblies are used in the cyclic control system in conjunction with magnetic brake assemblies. The force gradient and magnetic brake assemblies serve to give artificial “feel” to the flight controls and enable the pilot to “trim” the helicopter.

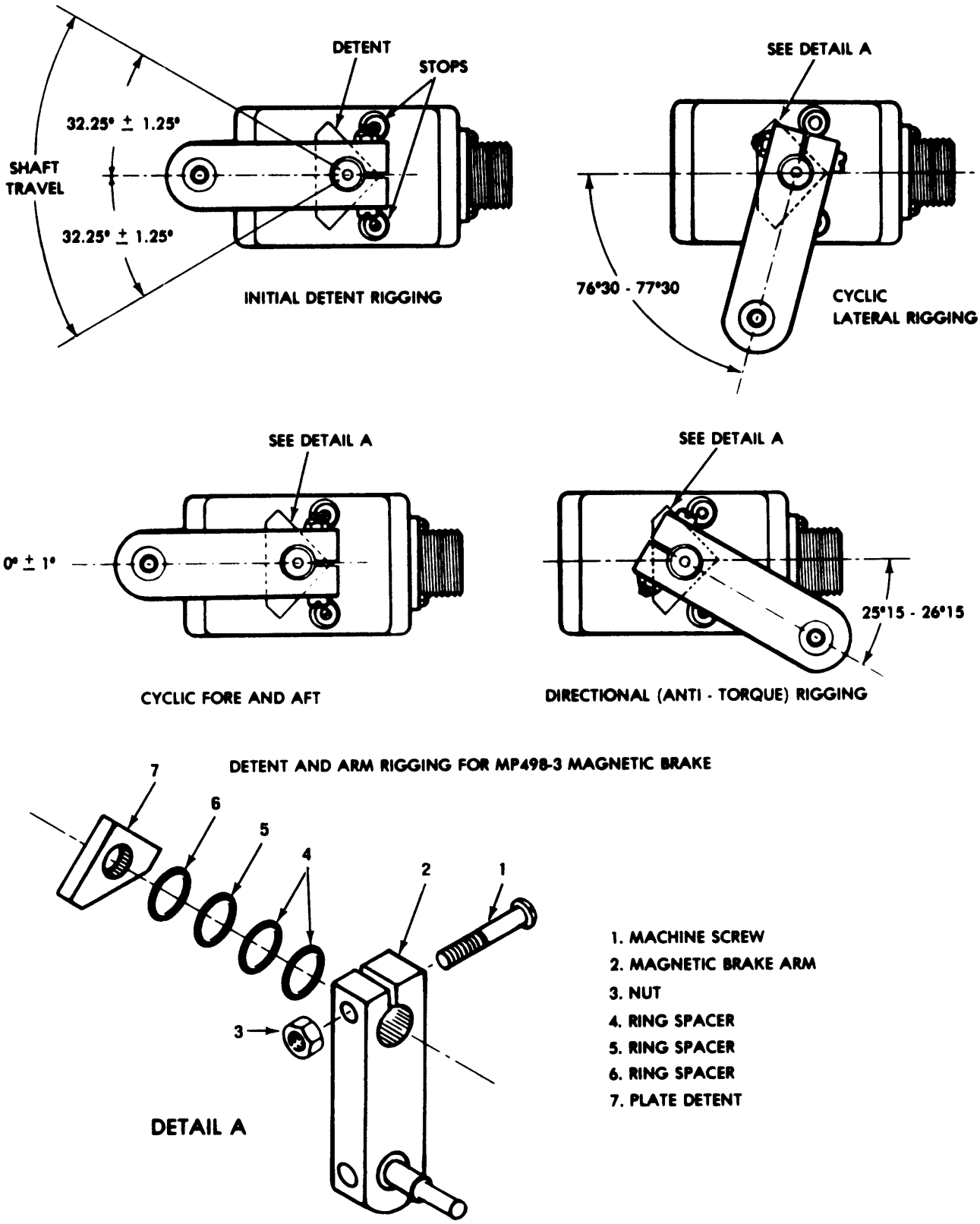

Figure 11-15 Magnetic Brake Adjustment (Sheet 1 of 2).

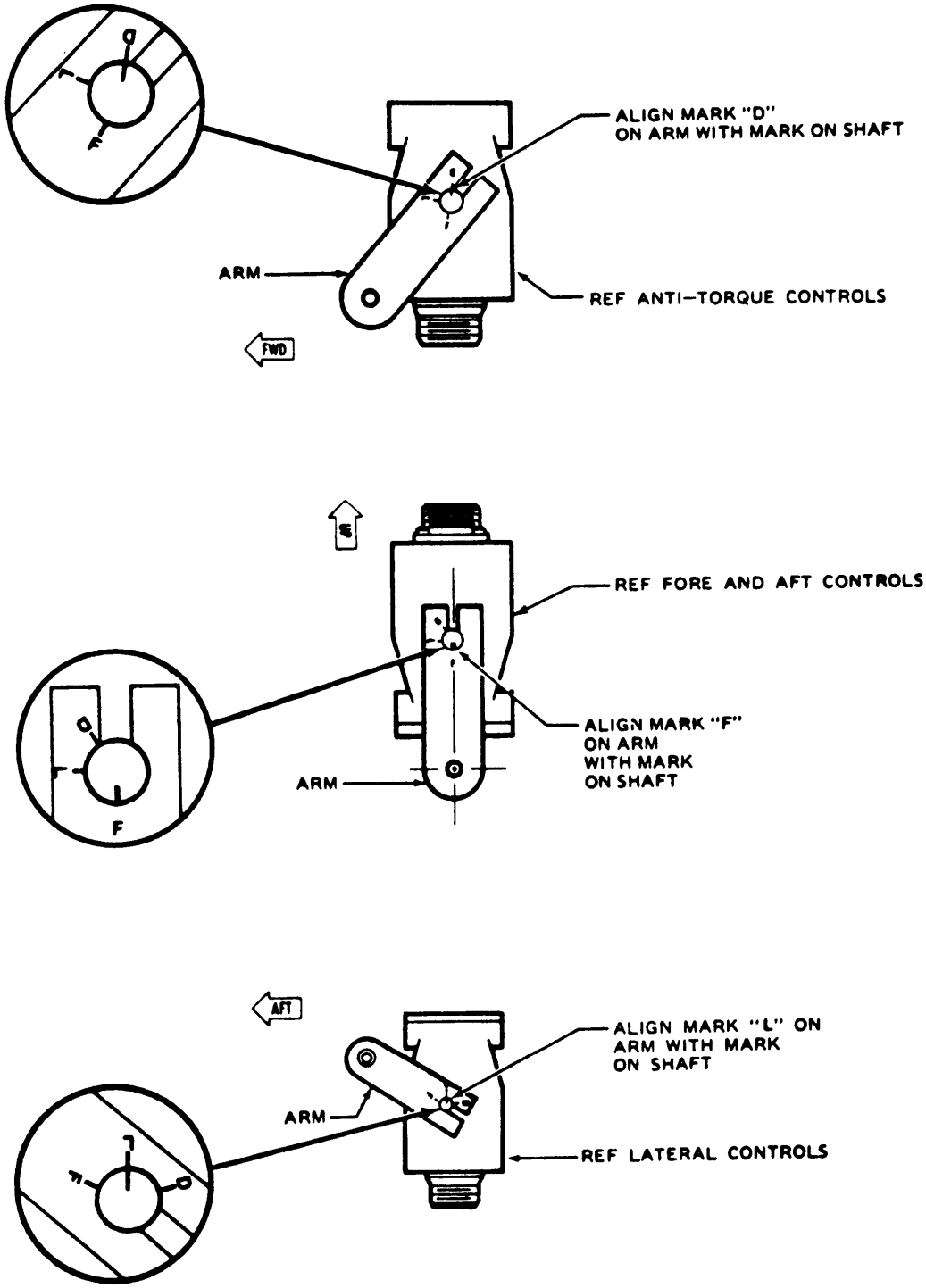

Figure 11-15. Magnetic Brake Adjustment (Sheet 2 of 2)

11-82. Adjustment - Force Gradient Cyclic Controls.

NOTE

Ensure that parts are not intermixed when two or more force gradient assemblies are disassembled at one time.

a. Remove force gradient assembly (paragraph 11-83).

b. Preload spring in force gradient assemblies (lateral, fore and aft, and directional) as follows:

(1) Remove spring assembly (7, figure 11-16) from housing (3) by removing cap (2).

(2) Place spring assembly, with clevis installed, in a vise as shown in figure 11-16.

NOTE

Do not tighten vise on rod. Allow spring retainer to pull evenly against both jaws of vise.

(3) Attach spring scale (11) to bolt installed through clevis (12). Compress spring (7) with a steady **2.5 TO 3.5** pounds pull.

(4) While maintaining this tension, tighten adjustment nut (8) until it makes contact with spring retainer (6).

(5) Hold adjustment nut (8) while tightening jam nut (9).

c. Reassemble force gradient assembly as follows:

(1) Place spring assembly (7, figure 11-16) in housing (3).

(2) Install cap (2) and tighten sufficiently to eliminate end play.

NOTE

A cap too tight or too loose will cause end play,

(3) Apply lockwire (C155) to cap (2) to prevent rotation in either direction.

11-83. Removal — Force Gradient — Cyclic Controls. a. Remove cotter pin (6), nut (7, figure 11-14) attaching force gradient (11) to magnetic brake (8).

b. Disconnect other end from clevis (5).

11-84. Inspection - Force Gradient — Cyclic Controls. a. Inspect for preloading and freedom of operation.

b. Inspect for loose, missing or improperly installed hardware.

c. Inspect for bottoming at all control positions.

d. Inspect shaft lock nuts for security and cap for correct safetying.

e. Inspect bearing for wear and damage (figure 11-44).

f. Inspect for wear and damage in accordance with figure 11-17.

11-85. Repair or Replacement — Force Gradient — Cyclic Controls (AVIM) a. Repair or replace force gradients in accordance with wear and damage limits of figure 11-17.

b. Replace worn or damaged bearings (figure 11-44).

11-86. Installation — Force Gradient — Cyclic Controls.

a. Connect force gradient shaft to clevis (5, figure 11-14). Adjust in accordance with paragraph 11-75.

11-87. MIXING LEVER ASSEMBLY – CYCLIC CONTROLS

11-88. Description — Mixing Lever Assembly — Cyclic Controls. The mixing lever assembly consists of bellcranks, matched links, and support. It is mounted on the right main beam below the cabin floor area

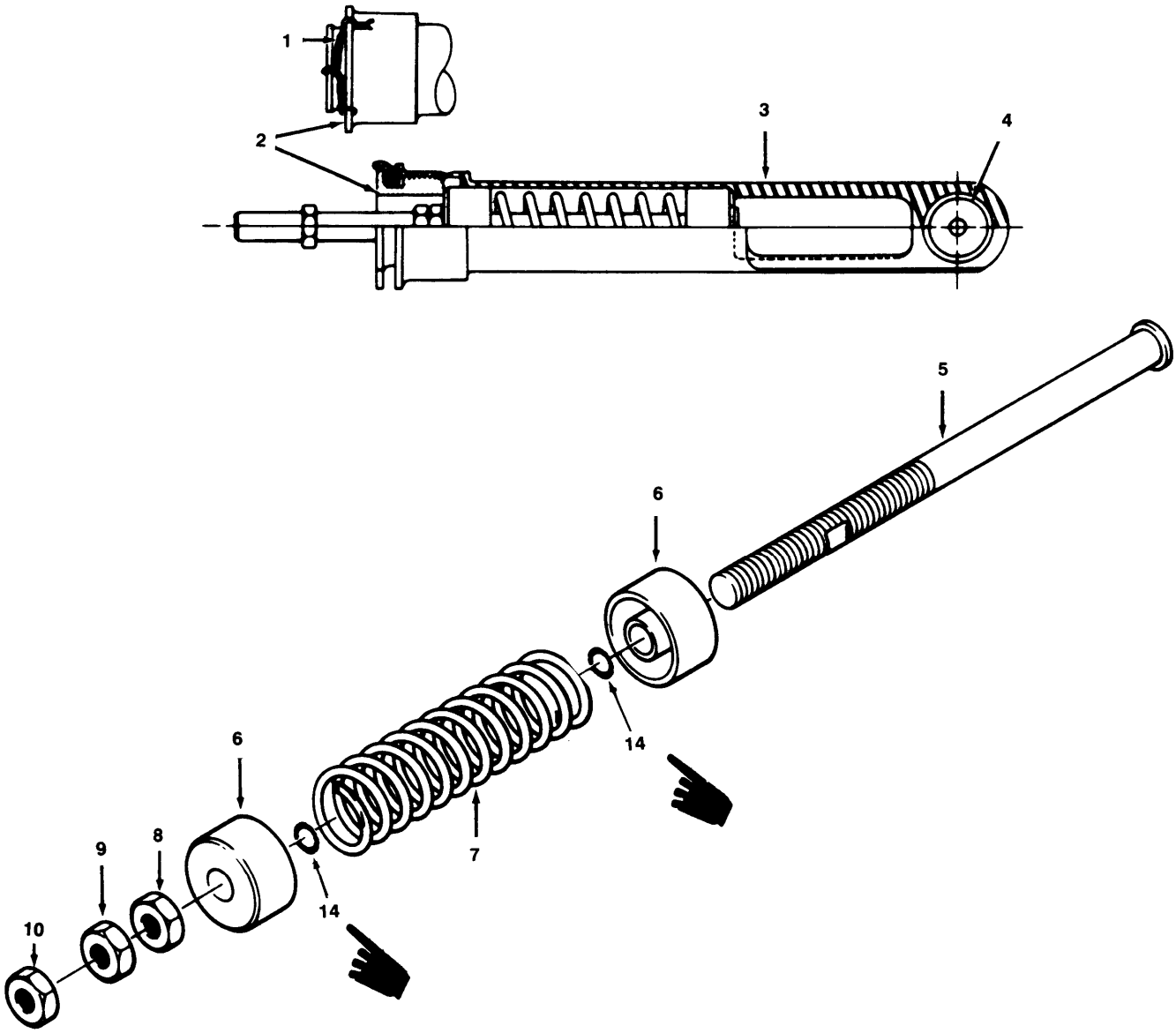

Figure 11-16. Force Gradient Assembly Adjustment (Sheet 1 of 2)

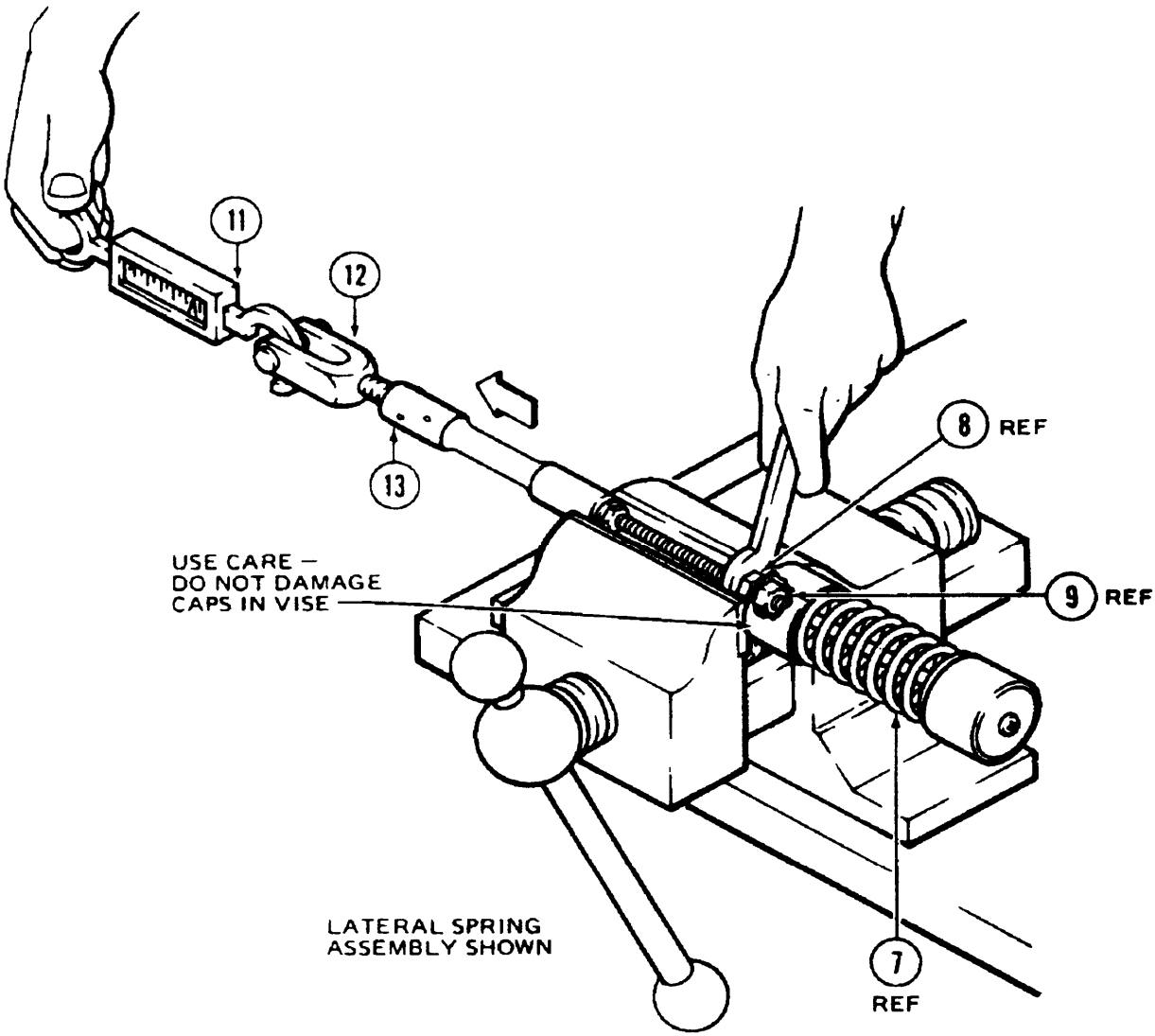

1. Lockwire
2. Cap
3. Housing
4. Bearing
5. Shaft
6. Spring retainer
7. Spring
8. Adjustment nut
9. Jam nut
10. Nut
11. Spring scale
12. Clevis
13. Link assembly
14. Washer

Figure 11-16. Force Gradient Assembly Adjustment (Sheet 2 of 2)

11-89. Removal — Mixing Lever Assembly — Cyclic Controls. a. Remove access door (72, figure 2-18).

b. Remove cotter pin and nut (14, figure 11-18), washers (2), and bolt (4) disconnecting end of tube (16).

c. Remove cotter pin (11), nut (12), washers (2), and bolt (6) disconnecting end of tube (15).

d. Remove cotter pin (11), nut (13), washers (2), and bolt (5) disconnecting end of tube (7).

e. Remove cotter pin (11), nut (10), washers (2), and bolt (8) disconnecting end of tube (9).

f. Remove bolt (3) and washer (2) attaching support (1) to right main beam.

11-90. Disassembly — Mixing Lever Assembly – Cyclic Controls. a. Remove cotter pin (16, figure 11-19), nut (20), washers (2), and bolts (1) attaching upper matched link (3).

b. Remove cotter pins (16), nuts (9 and 11) aluminum washers (5), and bolts (4 and 7) attaching upper and lower matched links (6). Remove bellcrank (8).

c. Remove cotter pin (16), nut (10), washers (12), and bolt (13) attaching lower matched link (3).

d. Remove cotter pin (16), nut (15) aluminum washers (18), and bolt (19) attaching bellcrank (17) to support (14).

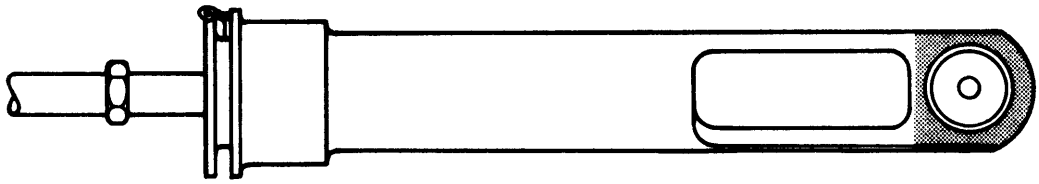

204-001-045-5
FORCE GRADIENT ASSEMBLY

	DAMAGE AREA REPAIR SYMBOLS	
TYPE OF DAMAGE		
MECHANICAL DAMAGE (AFTER CLEAN-UP)	0.015 IN.	0.010 IN.
CORROSION DAMAGE (BEFORE CLEAN-UP)	0.0075 IN.	0.005 IN.
(AFTER CLEAN-UP)	0.015 IN.	0.010 IN.
MAXIMUM AREA PER FULL DEPTH REPAIR	1 IN. SQ.	0.10 IN. SQ.
NUMBER OF REPAIRS	ONE PER AREA	ONE PER AREA
EDGE CHAMFER	0.05 BY 0.05 IN.	0.04 BY 0.04 IN.
BORE DAMAGE	0.002 INCH FOR ONE-FOURTH CIRCUMFERENCE	

REPLACE PARTS WITH DAMAGED THREADS

Figure 11-17. Wear and Damage Limits — Force Gradient

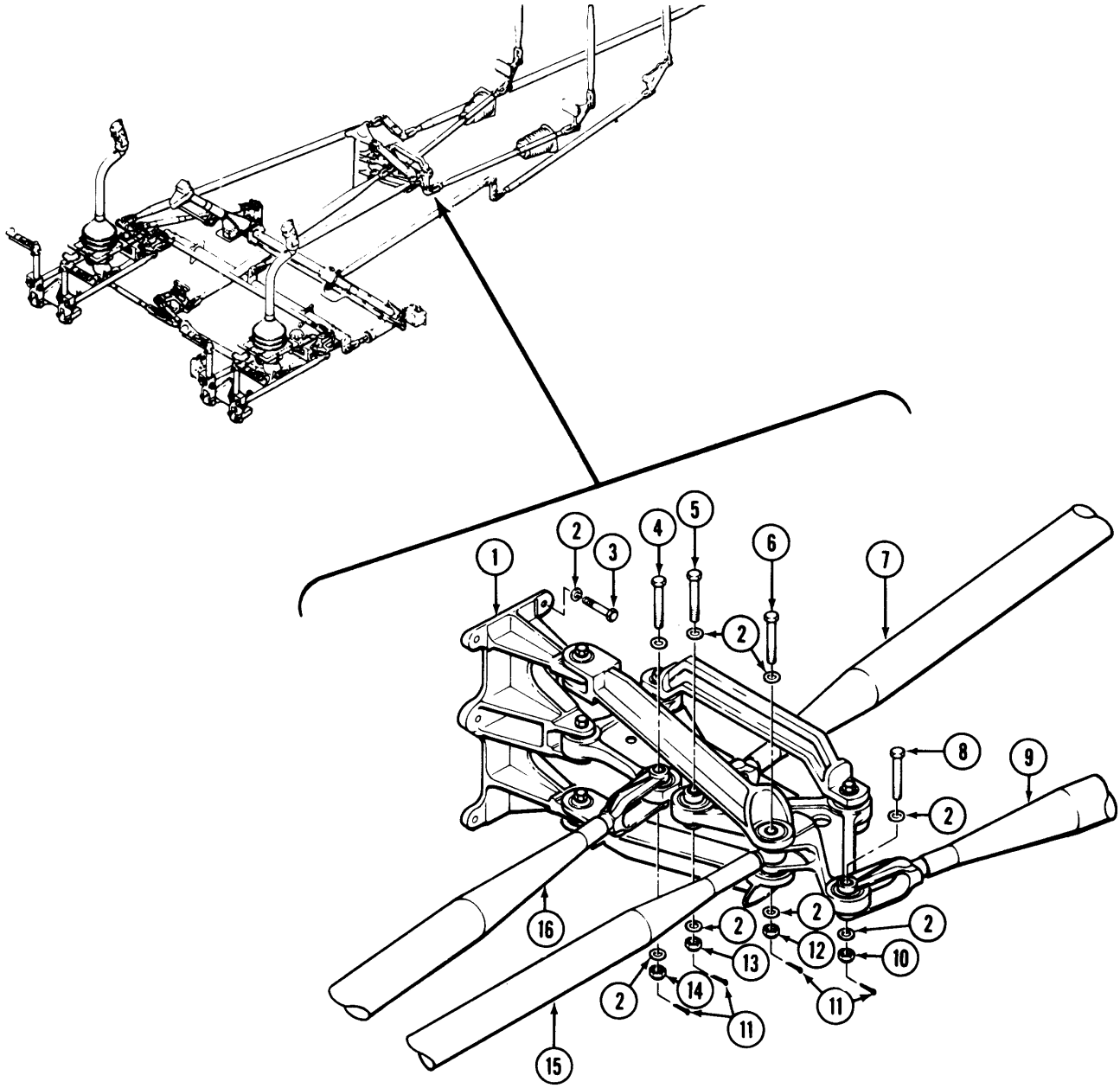

1. Support
2. Washer
3. Bolt
4. Bolt
5. Bolt
6. Bolt
7. Tube
8. Bolt
9. Tube
10. Nut
11. Cotter pin
12. Nut
13. Nut
14. Nut
15. Tube
16. Tube

Figure 11-18. Mixing Lever Assembly — Cyclic Controls — Removal and Installation

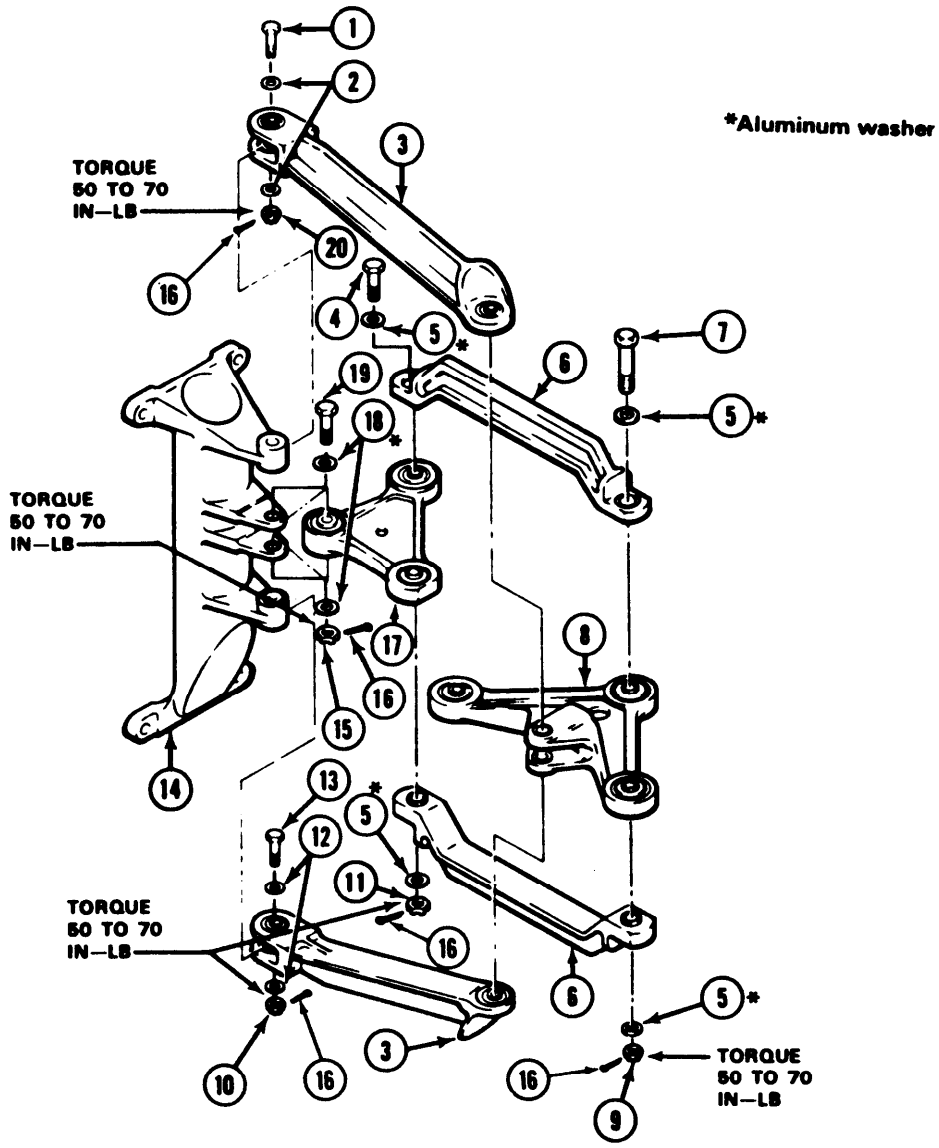

1. Bolt
2. Washer
3. Matched links
4. Bolt
5. Aluminum washer
6. Matched links
7. Bolt
8. Bellcrank
9. Nut
10. Nut
11. Nut
12. Washer
13. Bolt
14. Support
15. Nut
16. Cotter pin
17. Bellcrank
18. Washer
19. Bolt
20. Nut

Figure 11-19. Mixing Lever Assembly — Cyclic Controls — Disassembly and Assembly

Premaintenance Requirements for Tube and Lever Assembly-Cyclic Controls

Conditions	Requirements
Model	All
Part No. or Serial No.	All
Special Tools	None
Test Equipment	Eddy Current Inspection Unit
Support Equipment	None
Minimum Personnel Required	Two
Consumable Materials	None
Special Environmental Conditions	None
References	TM 1-1520-256-23

11-91. Inspection — Mixing Lever Assembly — Cyclic Controls.

a. Inspect bearings for wear and roughness (paragraph 11-185).

b. Inspect parts for wear, elongated bolt holes, cracks, nicks, and surface damage (figure 11-20). No cracks allowed. If a crack in the Mixing Lever Assembly is suspected, refer to TM 1-1520-256-23, Technical Manual Aviation Unit Maintenance (AVUM) and Aviation Intermediate Maintenance (AVIM) manual nondestructive inspection procedures for UH-1 helicopter series.

c. Inspect parts for corrosion.

d. Inspect for loose, missing or improperly installed hardware.

11-92. Repair or Replacement — Mixing Lever Assembly — Cyclic Controls.

a. Repair or replace mixing lever assembly in accordance with wear and damage limits of figure 11-20.

b. Replace any parts that do not meet inspection requirements.

c. Refer to paragraph 11-185 for bearing replacement.

11-93. Assembly — Mixing Lever Assembly — Cyclic Controls.

a. Place bellcrank (17, figure 11-19) on center attachment point of support (14). Install bolt (19), aluminum washers (18), and nut (15). Torque nut **50 TO 70** inch-pounds. Secure with cotter pin (16).

b. Place lower half of matched link (3) on lower attachment point of support (14). Install bolt (13), washers (12), and nut (10). Torque nut **50 TO 70** inch-pounds. Secure with cotter pin (16).

c. Place bellcrank (8) between both upper and lower matched links (6). Install bolt (7), with aluminum washer (5) through upper matched link (6) and aft attachment point of bellcrank (8) and through lower matched link (6). Install aluminum washer (5) and tighten nut (9) slightly. Install bolt (4), with aluminum washer (5) through upper matched link (6) and through aft attachment point of bellcrank (17), and through lower matched link (6). Install aluminum washer (5) and nut (11). Torque nuts **50 TO 70** inch-pounds. Secure with cotter pins.

d. Place upper matched link (3) on upper attachment point of support (14). Install bolt (1), with washers (2), and nut (20). Torque nut **50 TO 70** inch-pounds. Secure with cotter pin (16).

11-94. Installation — Mixing Lever Assembly — Cyclic Controls.

a. Inspect mounting surface on right main beam of support (1, figure 11-18) to determine if tape (C278) is torn or missing. Install new tape if torn or missing.

NOTE

Tape (C278) shall cover the entire mating surface area of one of the parts. Also, it shall extend at least 0.25 inch beyond the joint edges.

b. Install bolts (3) and washers (2) to attach support (1) to right main beam.

c. Place tube (9) on bell crank (8, figure 11-19) and attach with bolt (8, figure 11-18), washers (2), and nut (10). Secure with cotter pin (11).

d. Place tube (7) on bellcrank (8, figure 11-19) and attach with bolt (5, figure 11-18), washers (2), and nut (13). Secure with cotter pin (11).

e. Place tube (15) on bellcrank (8, figure 11-19) and attach with bolt (6, figure 11-18) washers (2), and nut (12). Secure with cotter pin (11).

f. Place tube (16) on bellcrank (17, figure 11-19) and attach with bolt (4, figure 11-18) washers (2), and nut (14). Secure with cotter pin (11).

g. Install access door (72, figure 2-18).

11-95. CONTROL TUBES — CYCLIC CONTROL SYSTEM.

11-96. Description — Control Tubes — Cyclic Control System. Control tubes (adjustable and non-adjustable) are used throughout the cyclic control system. The tubes are connected to bellcranks and levers supports with standard hardware.

11-97. Removal — Controls Tubes — Cyclic Control System.

CAUTION

When disconnecting control tubes, main rotor hub and blade assembly should not be rotated. Damage to swashplate and scissors and sleeve assembly may result.

a. Remove access doors (66, 68, 69, 70, 72, 73, and 79, figure 2-18) as required for access to cyclic control tubes.

b. Detach end of control tube (6, figure 11-21) from pilots cyclic stick by removing cotter pin (1), nut (2), two washers (3) and bolt (7), (detail A, sheet 1).

c. Detach opposite end of control tube (6) from arm of tube and lever assembly by removing cotter pin (1), nut (4), two washers (3) and bolt (5), (detail A, sheet 1).

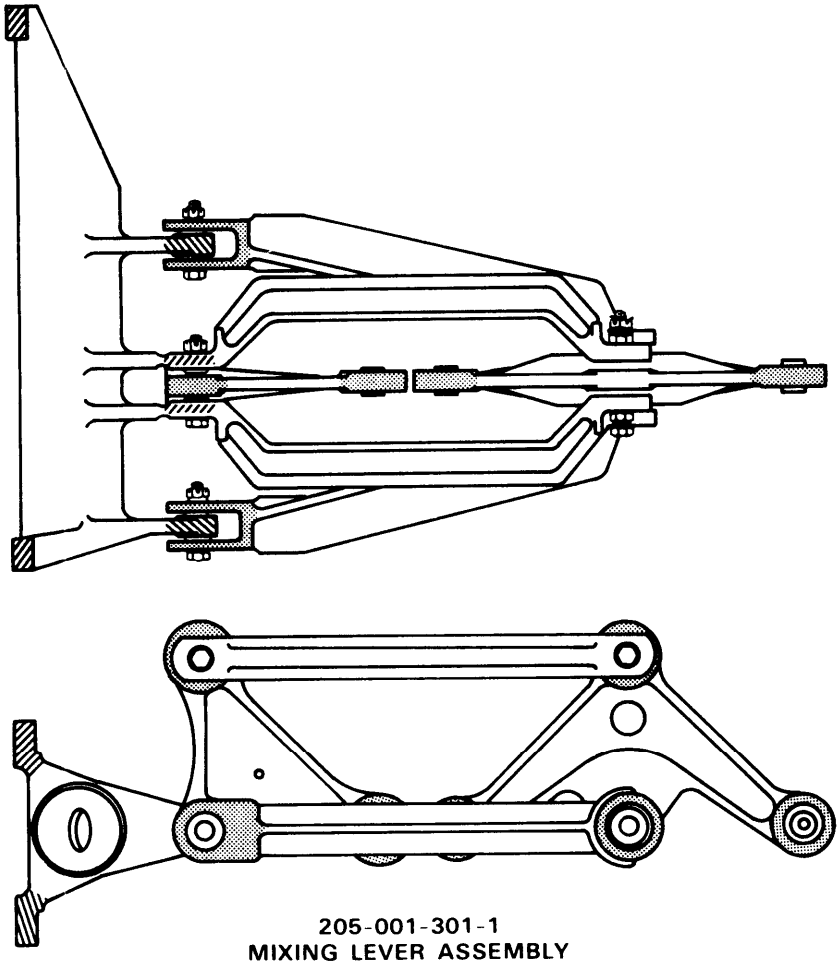

205-001-301-1
MIXING LEVER ASSEMBLY

TYPE OF DAMAGE	DAMAGE AREA REPAIR SYMBOLS		
MECHANICAL DAMAGE (AFTER CLEAN-UP)	0.015 IN	0.010 IN.	0.005 IN.
CORROSION DAMAGE (BEFORE CLEAN-UP) (AFTER CLEAN-UP)	0.0075 IN. 0.015 IN.	0.005 IN. 0.010 IN.	0.0025 IN. 0.005 IN.
MAXIMUM AREA PER FULL DEPTH REPAIR	1 IN.SQ.	0.10 IN. SQ.	0.10 IN.SQ.
NUMBER OF REPAIRS	ONE PER AREA	ONE PER AREA	ONE PER AREA
EDGE CHAMFER	0.05 BY 0.05	0.04 BY 0.04	
BORE DAMAGE	0.002 INCH FOR ONE-FOURTH CIRCUMFERENCE		

Figure 11-20. Wear and Damage Limits— Mixing Lever Assembly Cyclic Control System

d. Detach end of control tube (8) from pilots cyclic stick by removing cotter pin (1), nut (9), two washers (3) and bolt (10), (detail A, sheet 1).

e. Detach opposite end of control tube (8) from bellcrank (11) by removing cotter pin (1), nut (18), two washers (13), and bolt (20), detail B, sheet 2).

f. Detach end of control tube (16) from copilots cyclic stick by removing cotter pin (1), nut (42), two washers (31), and bolt (41), (detail D, sheet 3).

g. Detach opposite end of control rube (16) from bellcrank (11) by removing cotter pin (1), nut (17), two washers (13) and bolt (19), (detail B, sheet 2).

h. Detach end of control tube (14) from bellcrank (11) by removing cotter pin (1), nut (15), two washers (13), and bolt (12), (detail B, sheet 2).

i. Detach opposite end of control tube (14) from mixing levers and support (43) by removing cotter pin (50), nut (52), two washers (45) and bolt (53), (detail E, sheet 4).

j. Detach control tube (32) from lever (35) by removing cotter pin (33), nut (34), two washers (31) and bolt (30), (detail C, sheet 3).

k. Detach opposite end of control tube (32) from mixing levers and support (43) by removing cotter pin (50), nut (52), two washers (45) and bolt (53), (detail E, sheet 4).

l. Detach control tube (49) from mixing levers and support (43) by removing cotter pin (50), nut (51), two washers (45) and bolt (48), (detail E, sheet 4).

m. Detach opposite end of control tube (49) from bellcrank (72) by removing cotter pin (57), nut (73), two washers (54) and bolt (77), (detail F, sheet 5).

n. Detach control tube (49) from mixing levers and support (43) by removing cotter pin (50), nut (51), two washers (45) and bolt (48), (detail E, sheet 4).

o. Detach opposite end of control tube (49) from bellcrank (72) by removing cotter pin (57), nut (73), two washers (54) and bolt (77), (detail F, sheet 5).

p. Detach control tube (59) from bellcrank (61) by removing cotter pin (57), nut (60), two washers (54) and bolt (58), detail F, sheet 5).

q. Detach opposite end of control tube (59) from right fore and aft, and lateral cyclic actuator (paragraph 7-77).

r. Detach of control tube (70) from bellcrank (72) by removing cotter pin (57), nut (71), two washers (54), and bolt (69), (detail F, sheet 5).

s. Detach opposite end of control tube (71) from hydraulic cylinder assembly (paragraph 7-77).

t. Detach end of control tube (38) from copilots cyclic stick by removing cotter pin (33), nut (40), two washers (31) and bolt (39), (detail D, sheet 3).

u. Detach end of control tube (38) from arm of tube and lever assembly by removing cotter pin (33), nut (37), two washers (31) and bolt (36), (detail D, sheet 3).

Premaintenance Requirements for Control Tubes-Cyclic Control System

Conditions	Requirements
Model	All
Part No. or Serial No.	All
Special Tools	None
Test Equipment	Eddy Current Inspection Unit
Support Equipment	None
Minimum Personnel Required	Two
Consumable Materials	None
Special Environmental Conditions	None
References	TM 1-1520-256-23

11-98. Inspection — Control Tubes — Cyclic Control System.

a. Inspect control tubes for corrosion, wear, and mechanical damage. Refer to figure 11-22 for wear and damage limits. If a crack in the Control Tubes is suspected, refer to TM 1-1520-256-23, Technical Manual Aviation Unit Maintenance (AVUM) and Aviation Intermediate Maintenance (AVIM) manual nondestructive inspection procedures for UH-1 helicopter series.

b. Inspect clevis end holes for wear and clevis end for looseness in tube.

11-99. Repair or Replacement — Control Tubes — Cyclic Control System (AVIM).

a. Polish out corrosion or mechanical damage to control tubes in accordance with limits of figure 11-22.

b. Any damage to control tubes in excess of limits is cause for replacement of control tube.

11-100. Installation — Control Tubes — Cyclic Control System.

a. Install control tubes (16, 38, 59, and 70, figure 11-21) by the rigging procedure (paragraph 11-55).

b. Align end of control tube (6, figure 11-21) on arm of tube and lever assembly. Install bolt (5) with washer (3) through clevis. Install washer (3), nut (4) and cotter pin (1), (detail A, sheet 1).

c. Align end of control tube (6) to lever on bottom of pilots cyclic stick. Install bolt (7), two washers (3), nut (2) and secure with cotter pin (1), (detail A, sheet 1).

d. Align end of control tube (8) on lever on bottom of pilots cyclic stick. Install bolt (10), two

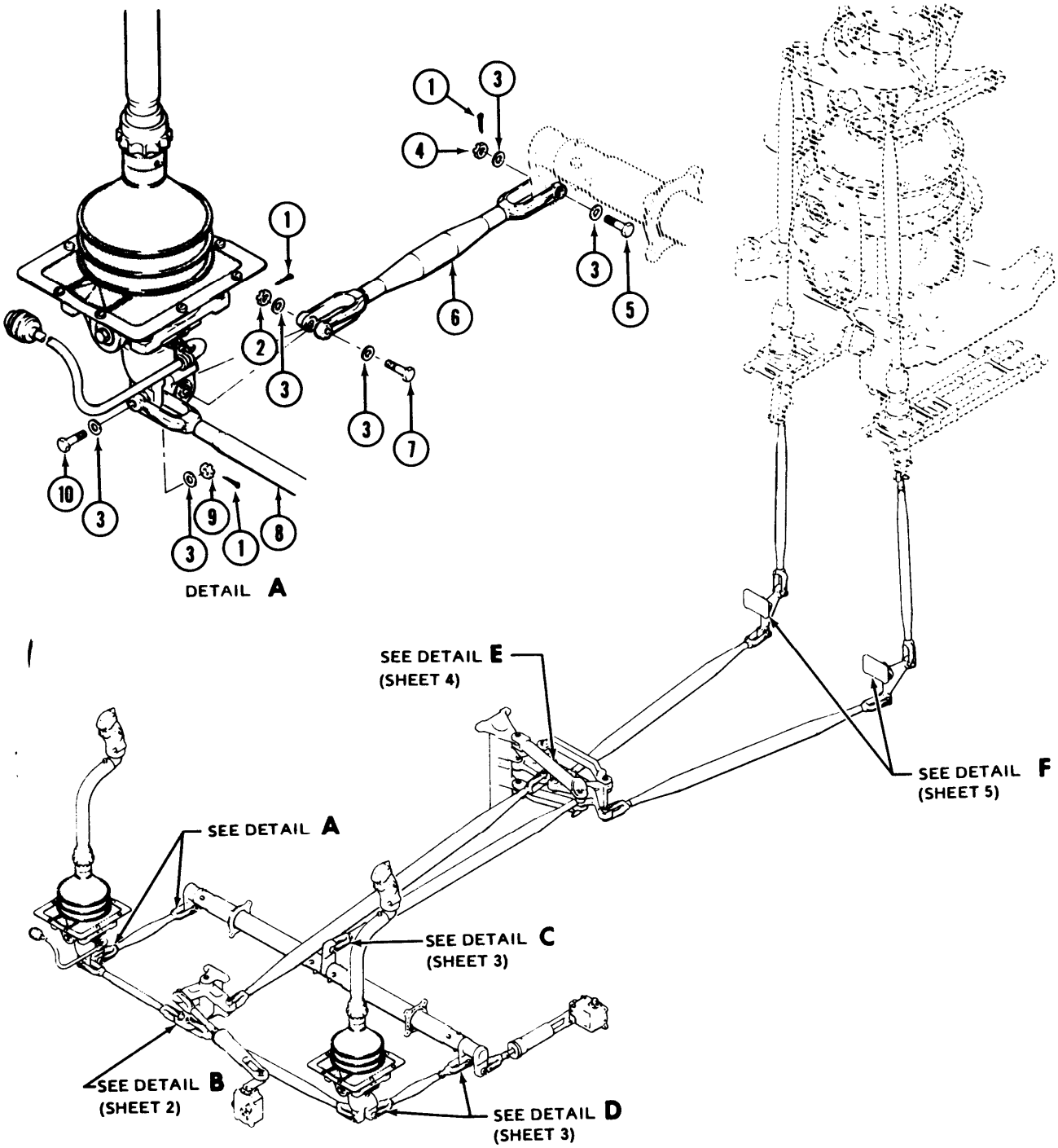

1. Cotter pin
2. Nut
3. Washer
4. Nut
5. Bolt
6. Control tube
7. Bolt
8. Control tube
9. Nut
10. Bolt

Figure 11-21. Cyclic Control System (Bellcranks, Levers, Supports, and Control Tubes) – Removal and Installation (Sheet 1 of 5)

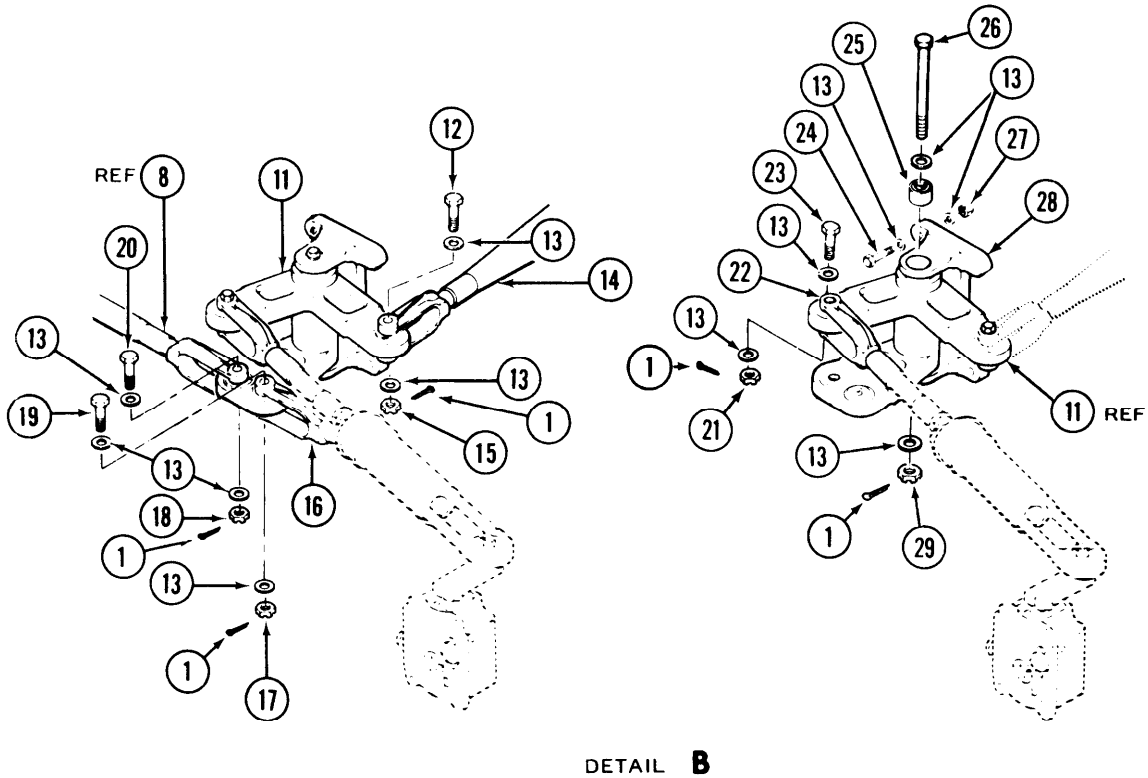

11. Bellcrank
12. Bolt
13. Washer
14. Control tube
15. Nut
16. Control tube
17. Nut
18. Nut
19. Bolt
20. Bolt
21. Nut
22. Clevis
23. Bolt
24. Bolt
25. Bearing
26. Bolt
27. Nut
28. Support
29. Nut

Figure 11-21. Cyclic Control System (Bellcranks, Levers, Supports, and Control Tubes) – Removal and Installation (Sheet 2 of 5)

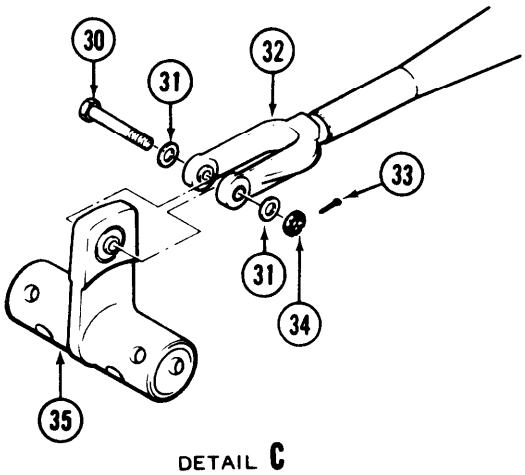

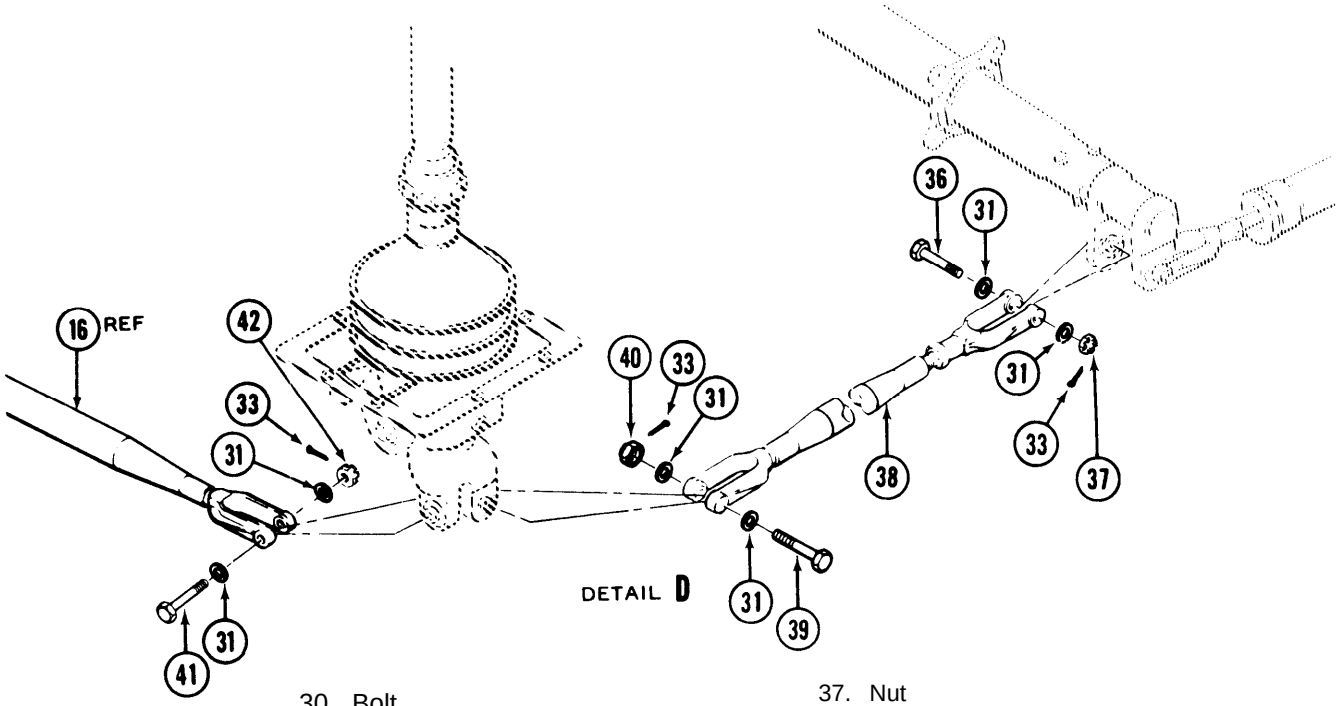

30. Bolt
31. Washer
32. Control tube
33. Cotter pin
34. Nut
35. Lever
36. Bolt
37. Nut
38. Control tube
39. Bolt
40. Nut
41. Bolt
42. Nut

Figure 11-21. Cyclic Control System (Bellcranks, Levers, Supports, and Control Tubes) — Removal and Installation (Sheet 3 of 5)

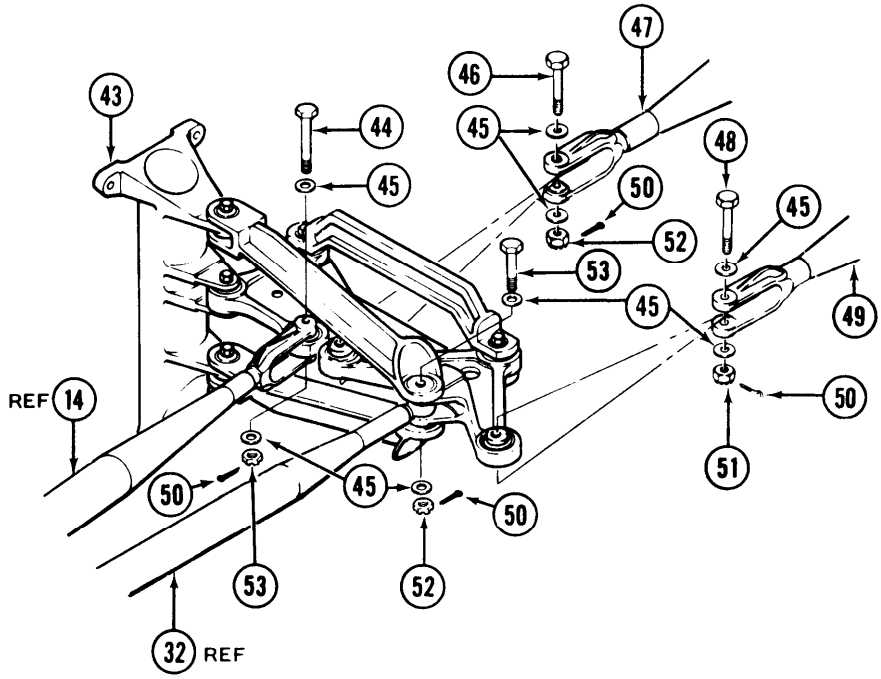

DETAIL E

43. Mixing levers and support
44. Bolt
45. Washer
46. Bolt
47. Control tube
48. Bolt
49. Control tube
50. Cotter pin
51. Nut
52. Nut
53. Bolt

Figure 11-21. Cyclic Control System (Bellcranks, Levers, Supports, and Control Tubes) — Removal and Installation (Sheet 4 of 5)

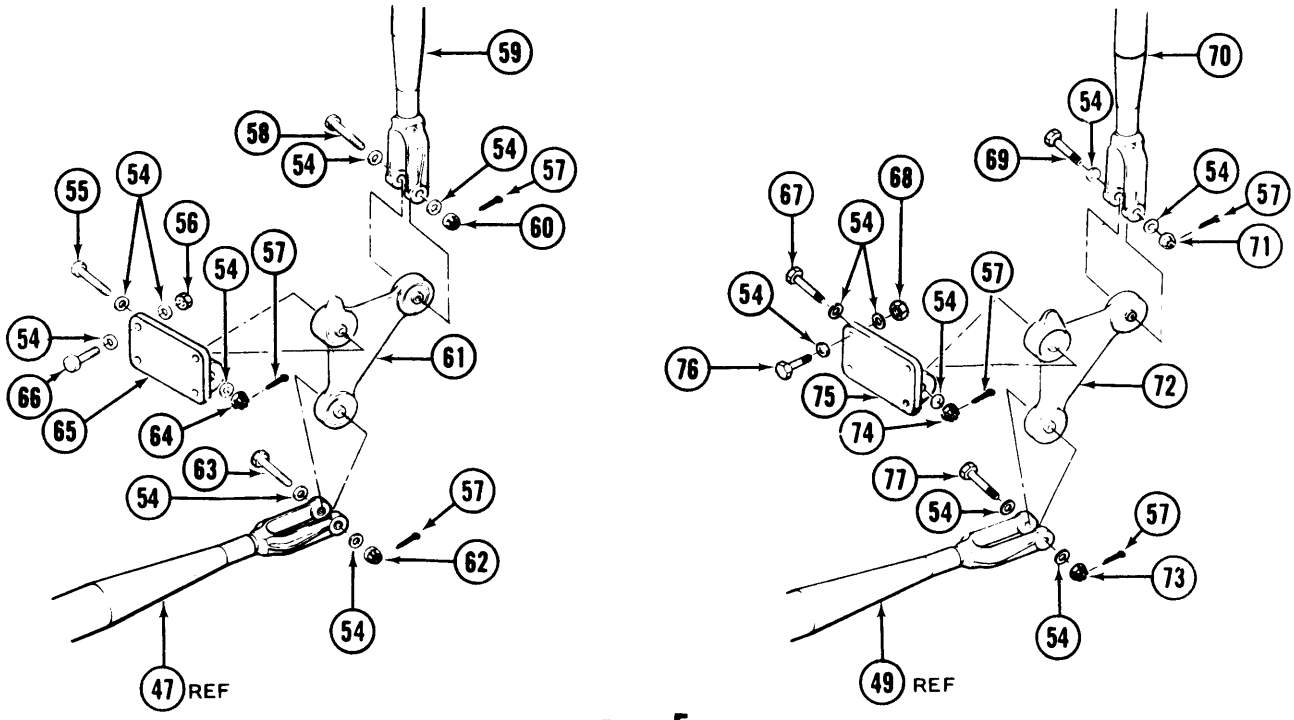

54. Washer
55. Bolt
56. Nut
57. Cotter pin
58. Bolt
59. Control tube
60. Nut
61. Bellcrank
62. Nut
63. Bolt
64. Nut
65. Support
66. Bolt
67. Bolt
68. Nut
69. Bolt
70. Control tube
71. Nut
72. Bellcrank
73. Nut
74. Nut
75. Support
76. Bolt
77. Bolt

Figure 11-21. Cyclic Control System (Bellcranks, Levers, Supports, and Control Tubes) – Removal and Installation (Sheet 5 of 5)

washers (3), nut (9) and secure with cotter pin (1), (detail A, sheet 1).

e. Align end of control (8) on bellank (11). Install bolt (20) with washers (13), nut (18) and secure with cotter pin (1), (detail B, sheet 2).

f. Align end of control tube (14) to bellcrank (11). install bolt (12), two washers (13), nut (15) and secure with cotter pin (1), (detail B, sheet 2).

g. Align opposite end of control tube (14) to mixing levers and support (43). Install bolt (44), two washers (45), nut (53), and secure with cotter pin (50), (detail E, sheet 4).

h. Align forward end of control tube (32) to lever (35). Install bolt (30), two washers (31), nut (34), and secure with cotter pin (33), (detail C, sheet 3).

i. Align rod end bearing on aft end of control tube (32) to mixing levers and support (43). Install bolt (53), two washers (46), nut (52), and secure with cotter pin (50), (detail E, sheet 4).

j. Align end of control tube (47) to mixing levers and support (43). Install bolt (46), two washers (45), nut (53), and secure with cotter pin (50), (detail E, sheet 4).

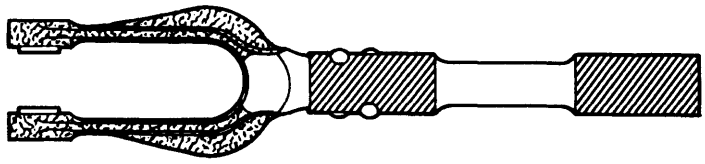

204-001-047-1
LINK ASSEMBLY

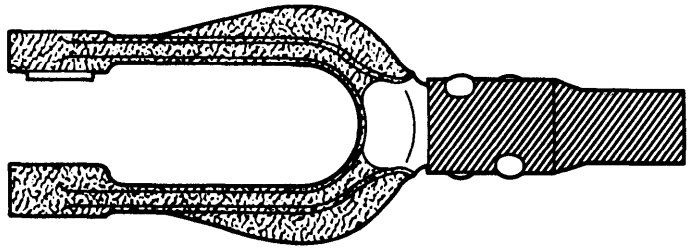

205-001-030-1
CLEVIS ASSEMBLY

DAMAGE AREA REPAIR SYMBOLS

TYPE OF DAMAGE			
MECHANICAL DAMAGE (AFTER CLEAN-UP)	0.015 IN.	0.010 IN.	0.005 IN.
CORROSION DAMAGE (BEFORE CLEAN-UP) (AFTER CLEAN-UP)	0.0075 IN. 0.015 IN.	0.005 IN, 0.010 IN.	0.0025 IN. 0.005 IN.
MAXIMUM AREA PER FULL DEPTH REPAIR	1 IN.SQ	0.10 IN.SQ.	0.10 IN.SQ.
NUMBER OF REPAIRS	ONE PER AREA	ONE PER AREA	ONE PER AREA
EDGE CHAMFER	0.05 BY 0.05	0.04 BY 0.04	
BORE DAMAGE	0.002 IN. FOR ONE-FOURTH CIRCUMFERENCE		

Figure 11-22. Wear and Damage Limits (Control Tubes, Links, and Clevises)—Cyclic Control System (Sheet 1 of 2)

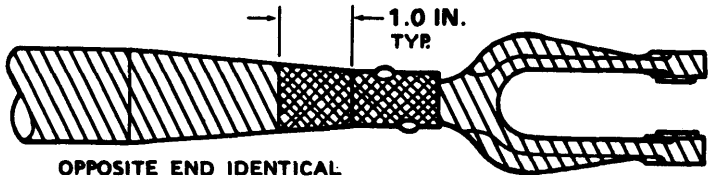

204-001-011-13
204-001-027-5
204-001-016-5
CONTROL TUBE ASSEMBLY

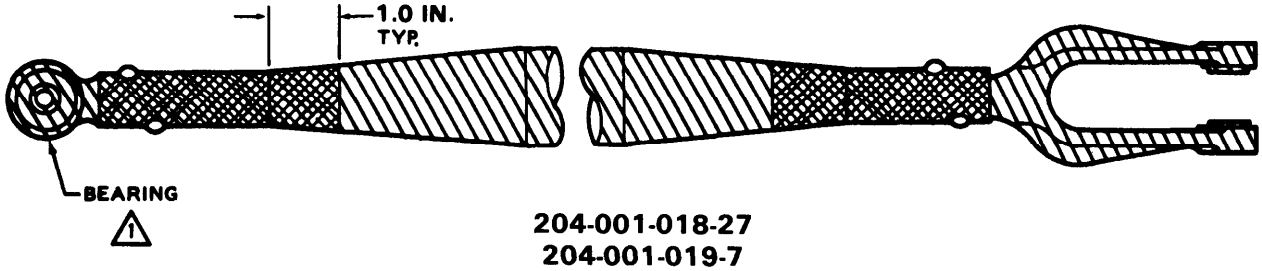

204-001-018-27
204-001-019-7
CONTROL TUBE ASSEMBLY

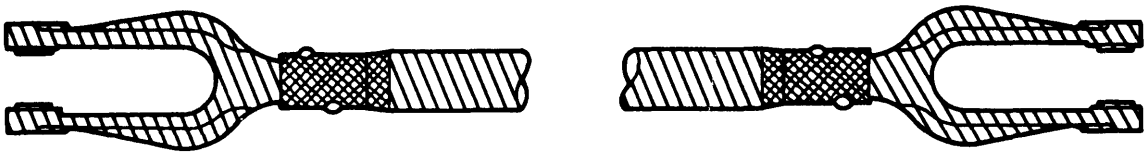

204-001-016-13
CONTROL TUBE ASSEMBLY

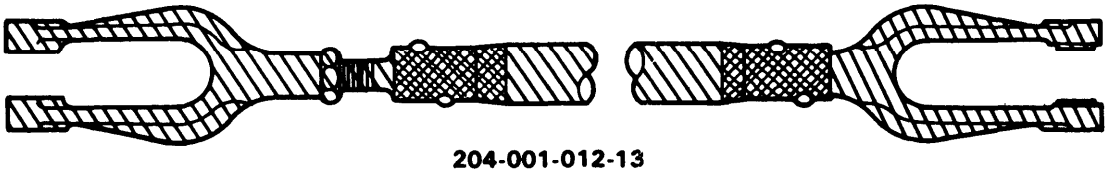

204-001-012-13
204-001-012-29
CONTROL TUBE ASSEMBLY

DAMAGE REPAIR AREA SYMBOLS

TYPE OF DAMAGE		
MECHANICAL DAMAGE NO CRACKS ALLOWED	NO DAMAGE ALLOWED	MAXIMUM DAMAGE AFTER CLEAN-UP 0.005 IN.

NOTE: 1 Maximum play allowed in bearing — 0.010 inch axial or 0.005 inch radial.

205001-1035-2

Figure 11-22. Wear and Damage Limits (Control Tubes, Links, and Clevises) – Cyclic Control System (Sheet 2 of 2)

k. Align opposite end of control tube (47) to bellcrank (61). Install bolt (63), two washers (54), nut (62), and secure with cotter pin (57), (detail F, sheet 5).

l. Align end of control tube (49) to arm of mixing levers and support (43) bellcrank. Install bolt (48), two washers (45), nut (51), and secure with cotter pin (50), (detail E, sheet 4).

m. Align opposite end of control tube (49) to bellcrank (72). Install bolt (77), two washers (54), nut (73), and secure with cotter pin (57), (detail F, sheet 5).

11-101. BELLCRANKS, LEVERS AND SUPPORTS — CYCLIC CONTROL SYSTEM.

11-102. Description — Bellcranks, Levers and Support — Cyclic Control System. Various bellcranks, levers and supports are incorporated in the cyclic control system. The supports are mounted to the airframe for attachment of levers and bellcranks.

11-103. Removal — Bellcranks, Levers and Supports — Cyclic Control System.

a. Remove bellcrank (11, figure 11-21) and support (28) as follows: (detail B, sheet 2).

(1) Remove access doors (68 and 69, figure 2-18).

(2) Disconnect cyclic control tubes (8, 14 and 16, figure 11-21) and lateral cyclic clevis (22) from bellcrank (11), (paragraph 11-97).

(3) Remove cotter pin (1), nut (29), washers (13) and bolt (26) from support (28) and remove bellcrank (11) and bearing (25) from support.

(4) Remove four nuts (27), washers (13), and four bolts (24) from support (28) and remove support.

b. Remove bellcrank (72) and support (75) as follows: (detail F, sheet 5).

(1) Remove cargo hook (paragraph 14-285).

(2) Remove troop seat (paragraph 2-256), soundproofing blanket, and access door (80, figure 2-18) from pylon island in cabin area.

(3) Disconnect control tubes (49 and 70, figure 11-21) from bellcrank (72), (paragraph 11-97).

(4) Remove cotter pin (57), nut (71), two washers (54) and bolt (69) from support (75) and remove bellcrank (72).

(5) Remove four nuts (68), washers (54) and four bolts (76) from support (75) and remove support.

c. Remove bellcrank (61) and support (65) as follows: (detail F, sheet 5).

(1) Remove cargo hook (paragraph 14-285).

(2) Remove troop seat, soundproofing blanket, and access door (80, figure 2-18) from pylon island in cabin area.

(3) Disconnect control tubes (47 and (59, figure 11-21) from bellcrank (61), (paragraph 11-97).

(4) Remove cotter pin (57), nut (64), two washers 55 and bolt (55) from support (65) and remove bellcrank (61) from support.

(5) Remove four nuts (57), washers (54), and four bolts (66) from support (65) and remove support.

Premaintenance Requirements for Bellcranks, Levers, and Supports-Cyclic

Conditions	Requirements
Model	All
Part No. or Serial No.	All
Special Tools	None
Test Equipment	Eddy Current Inspection Unit
Support Equipment	None
Minimum Personnel Required	Two
Consumable Materials	None
Special Environmental Conditions	None
References	TM 1-1520-256-23

11-104. Inspection — Bellcranks, Levers and Supports — Cyclic Control System.

a. Inspect bellcranks, levers and supports for corrosion and mechanical damage. See figure 11-23 for inspection limits. If a crack in the Bellcranks, Levers, and Supports is suspected, refer to TM 1-1520-256-23, Technical Manual Aviation Unit Maintenance (AVUM) and Aviation Intermediate Maintenance (AVIM) manual nondestructive inspection procedures for UH-1 helicopter series.

b. Inspect bellcranks and supports for loose bearings. Refer to paragraph 11-185, for bearing limits.

c. Inspect bellcranks and levers for clearance and freedoms of movements.

11-105. Repair or Replacement — Bellcranks, Levers and Supports — Cyclic Control System (AVIM).

a. Replace loose or damaged bearings. Refer to paragraph 11-185 for replacement procedures.

b. Remove minor surface corrosion or repair allowable damage using fine grit sandpaper (C235). Observe limits shown in figure 11-23.

11-106. Installation — Bellcranks, Levers and Supports — Cyclic Control System.

a. Install tape (C278) on support (28, figure 11-21). Apply zinc chromate primer (C312) to bolts (24). Position support to forward side of bulkhead at station 37.00. Install four bolts (24) with aluminum washers (13) and install four washers (13) with nuts (27), (detail B, sheet 2).

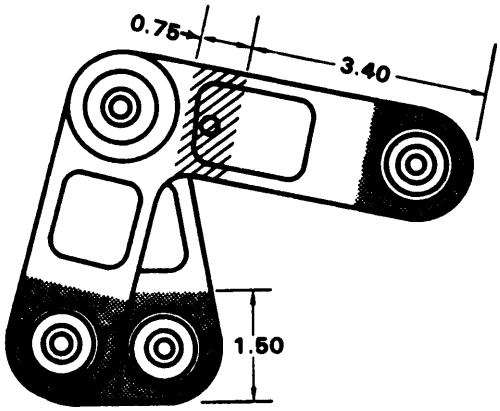

204-001-559-1 BELLCRANK

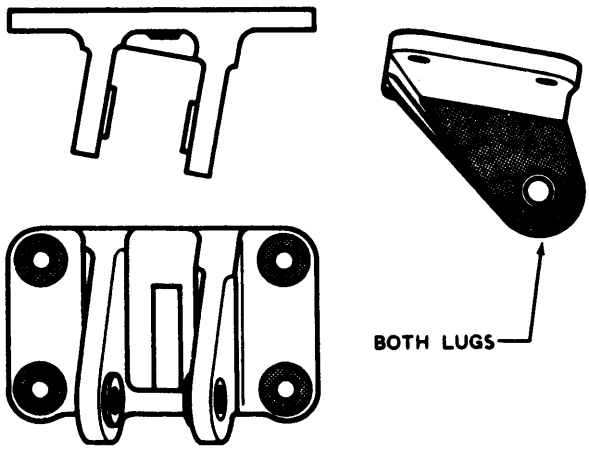

204-001-350-1 (SHOWN)
204-001-350-2 (OPPOSITE)
SUPPORT

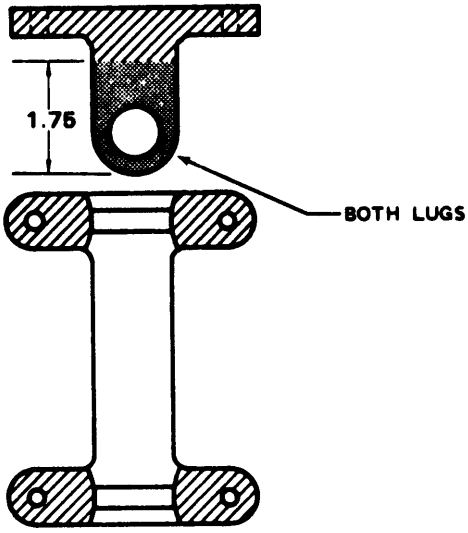

204-001-514-1 SUPPORT

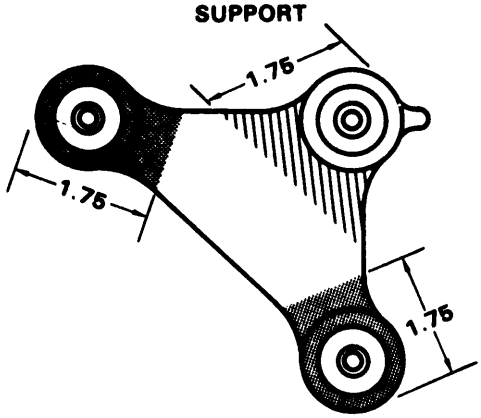

204-001-373-1 BELLCRANK

DAMAGE AREA REPAIR SYMBOLS

TYPE OF DAMAGE			
MECHANICAL DAMAGE (AFTER CLEAN-UP)	0.015 IN.	0.010 IN.	0.005 IN.
CORROSION DAMAGE (BEFORE CLEAN-UP)	0.0075 IN.	0.005 IN.	0.0025 IN.
(AFTER CLEAN-UP)	0.015 IN.	0.010 IN.	0.005 IN.
MAXIMUM AREA PER FULL DEPTH REPAIR	1 IN.SQ.	0.10 IN.SQ.	0.10 IN. SQ.
NUMBER OF REPAIRS	ONE PER AREA	ONE PER AREA	ONE PER AREA
EDGE CHAMFER	0.05 BY 0.05	0.04 BY 0.04	
BORE DAMAGE	0.002 INCH FOR ONE-FOURTH CIRCUMFERENCE		

NO CRACKS ALLOWED
ALL DIMENSIONS IN INCHES UNLESS OTHERWISE SPECIFIED

Figure 11-23. Wear and Damage Limits (Bellcranks and Supports)– Cyclic Control System

b. Position bellcrank (11) between ears of support (28). Apply primer (C312) to outer race of bearing (25) and install bearing in top arm of support (28). Install bolt (26) with washer (13) through support and bellcrank pivot and install washer (13) with nut (29) and cotter pin (1), (detail B, sheet 2).

c. Install tape (C278) on support (65 or 75). Apply primer (C312) to bolts (66 or 76). From inside transmission pylon support area, position support (65 or 75) to aft side of bulkhead at either right or left BL 9.70, at WL 21.00. Install four bolts (66 or 76) with washers (54) through bulkhead and support and install aluminum washers (54) and nuts (56 or 68), (detail F, sheet 5).

d. Position bellcrank (61 or 72), with stop at pivot point facing up, to support (65 or 65). Install bolt (55 or 68) with aluminum washer (55) through support and bellcrank. Install aluminum washers (54) with nuts (64 or 74) and cotter pins, (detail F, sheet 5).

e. Attach control tubes (47, 49, 59 or 70) as required (paragraph 11-100).

f. Install cargo hook (paragraph 14-145).

g. Install access door (68, 69 and 80, figure 2-18) and soundproofing blanket on transmission pylon in cabin area.

h. Install troop seat (paragraph 2-260)

11-107. TAIL ROTOR CONTROL SYSTEM.

11-108. Description — Tail Rotor Control System. a. The tail rotor control system (figure 11-24) includes control pedals, pedal adjusters, a force gradient (centering spring) assembly with an electrically operated magnetic brake, hydraulic actuator, a quadrant, cables and control chain operating a pitch control mechanism mounted through the tail rotor shaft, and connecting linkage Actuation of pedals causes power-assisted pitch change of tail rotor blades to offset main rotor torque and control directional heading of helicopter.

11-109. Deleted.

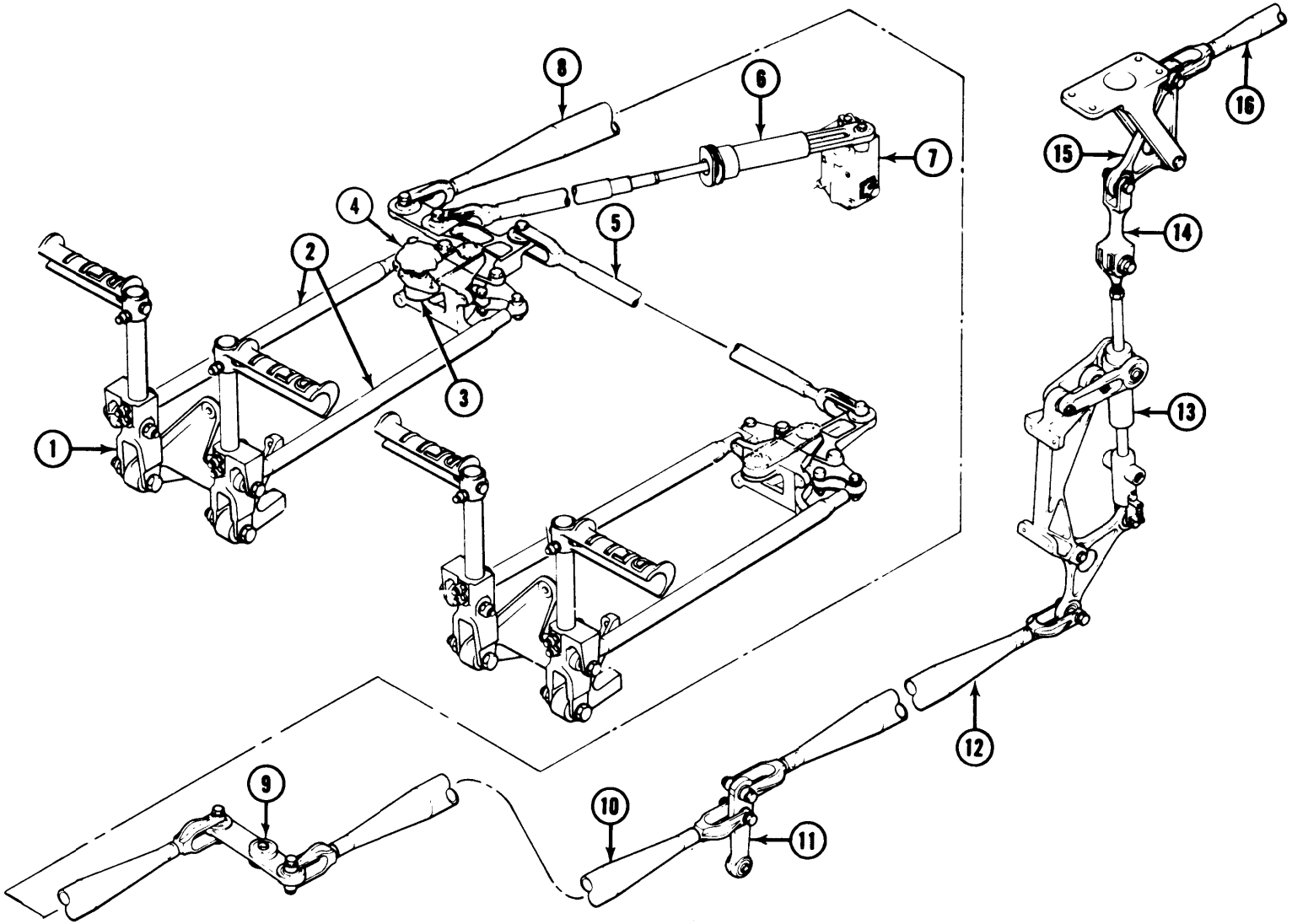

1. Pedals and support
2. Control tubes
3. Pedal adjuster
4. Adjuster knob
5. Interconnect tube
6. Force gradient
7. Magnetic brake
8. Control tube
9. Bellcrank
10. Control tube
11. Idler arm
12. Control tube
13. Power cylinder and support assembly
14. Link
15. Bellcrank
16. Control tube

Figure 11-24. Tail Rotor Control System (Sheet 1 of 2)

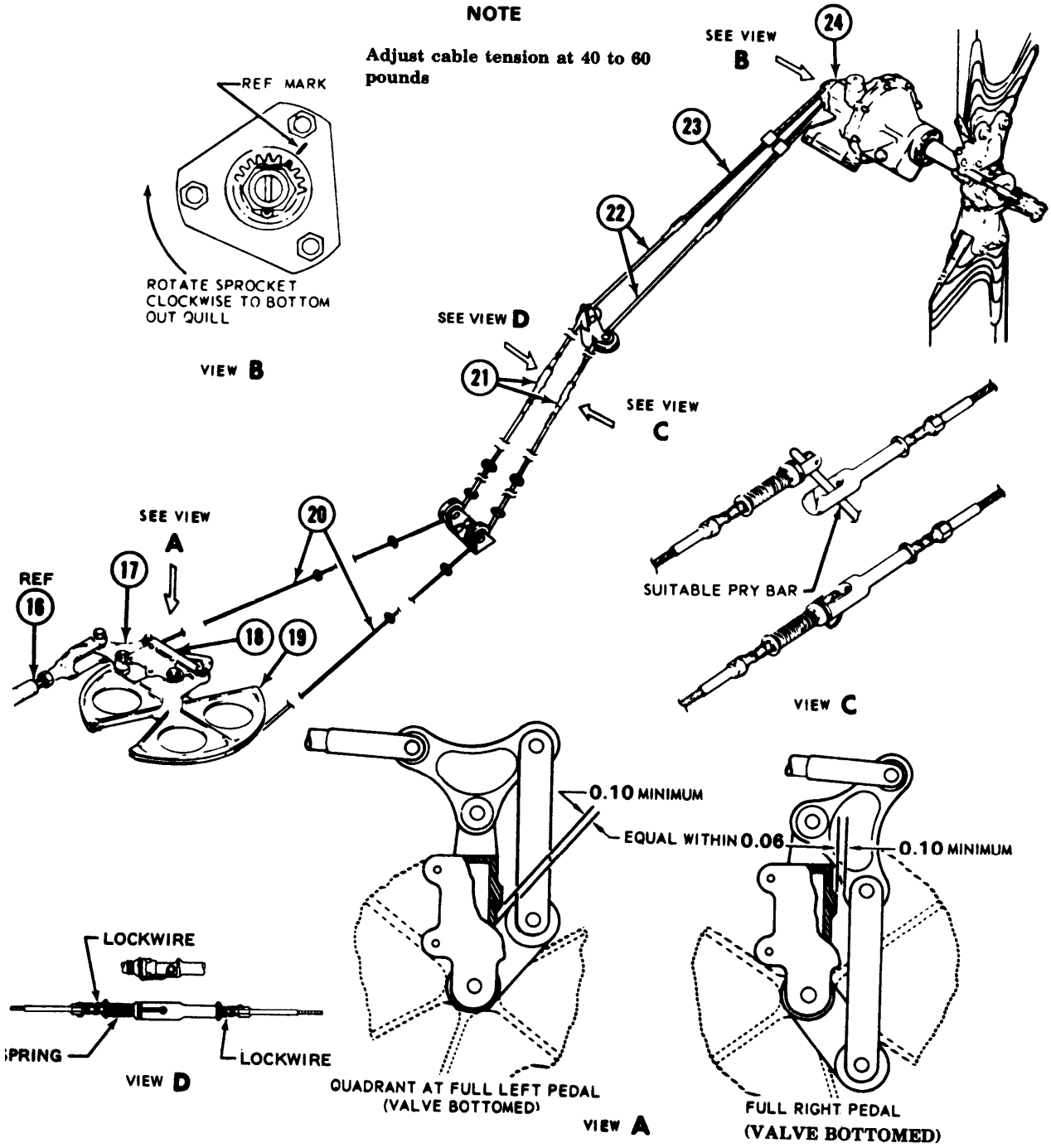

Figure 11-24. Tail Rotor Control System (Sheet 2 of 2)

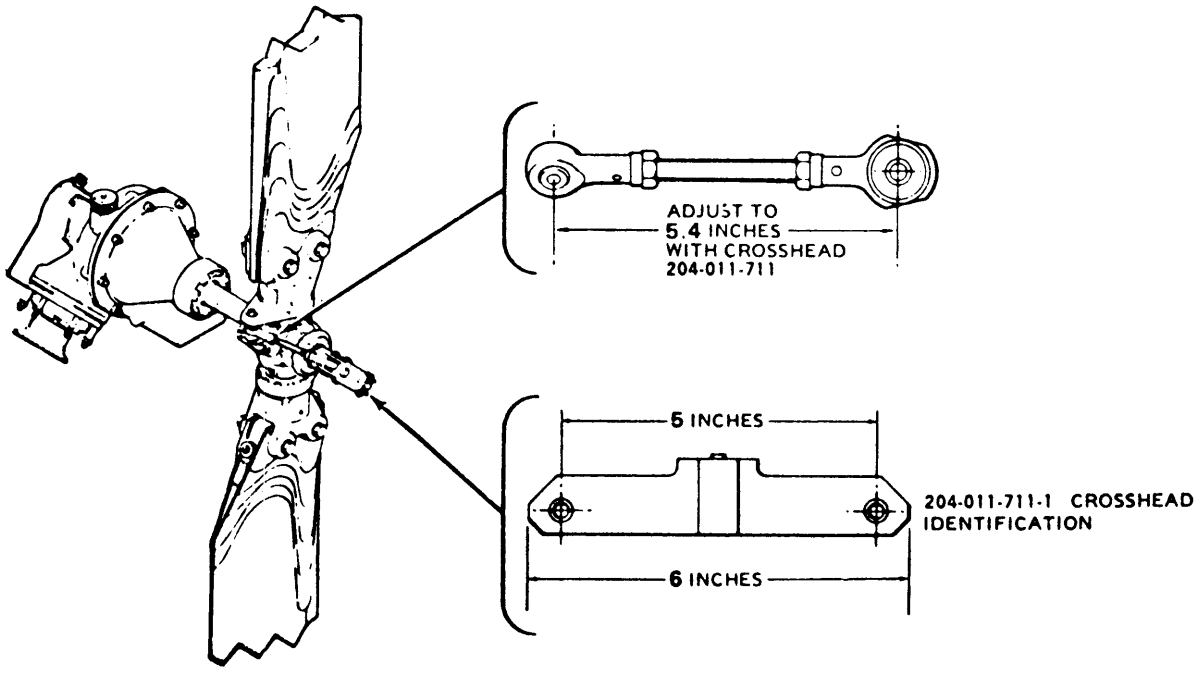

Figure 11-25. Tail Rotor Control Crosshead and Link Usage

11-110. Rigging — Tail Rotor Control System (With Roller Type Chain, Part Number 1560-UH-1-752-1).

NOTE

Accomplish rigging with hydraulic boost off.

a. Adjust tail rotor pitch links to initial length between bearing centers, to 5.4 inches with crosshead 204-011-711 (figure 11-25). Install all fixed tubes and links in tail rotor control system (figure 11-24). Crosshead assembly must be installed prior to rigging the tail rotor cable.

CAUTION

Ensure that correct part number crosshead, pitch change links, and attaching hardware are installed as illustrated in figure 11-25. If incorrect combinations of these parts are installed, interference and/or binding may occur. Refer to paragraph 5-97j.

NOTE

Length specified for pitch change links is an initial setting, and may be changed after operational checks for blade track or to obtain normal pedal positioning in autorotative landing and right sideward flight.

b. Deleted.

NOTE

Ensure nuts (35, figure 11-29) are installed on housing pan (38) prior to applying full pedal.

c. Apply and hold full left pedal on both pilot's and copilot's controls. Adjust interconnect tube (5, figure 11-24) to fit and connect.

d. Install control tube (16) ahead of quadrant, adjusted to provide minimum clearance at cable quadrant as illustrated for full left and full right pedal positions (view A. figure 11-24).

e. At control assembly on right side of 90 degree gear box, remove housing and tail rotor shaft cover; disconnect upper cable speed rig, sprocket guard and Chain from sprocket. Check the sprocket guard nuts, washers, and reinstall. Refer to paragraph 11-157 for tail rotor chain installation.

f. At full left pedal, without hydraulic power, check that sprocket is **1-1/4 TO 2-1/4** teeth from bottom position as shown by reference mark.

NOTE

If hydraulic power is available, check full left pedal sprocket position with "Boost on" to be **1/4 TO 1-1/4** teeth from bottom by observing relation of sprocket and index mark.

g. Disconnect upper cable speed rig. Install guard and cover over control quill. Reconnect upper cable speed rig and lockwire (C155). Recheck cable tension.

h. Be sure magnetic brake has arm located properly, with (D) mark (for directional) on arm aligned to scribe mark on shaft. With arm at center of travel and with control pedals held in neutral, adjust force gradient tube to fit and connect.

i. Check tail rotor blade/tail boom vertical fin clearance (paragraph 5-97M).

j. Make final adjustment of pitch change links. Adjust to obtain right pedal 1.0 to 2.0 inch forward of neutral, in flight cruise, reference TM 55-1520-242 MTF to move right pedal forward, lengthen both pitch change links, evenly, one turn at a time until desired setting is obtained. To move right pedal aft, shorten both pitch change links evenly, one turn at a time until desired setting is obtained. Recheck tail rotor to fin clearance, if pitch change links were adjusted.

11-111. MAGNETIC BRAKE — TAIL ROTOR CONTROLS.

11-112. Description — Magnetic Brake Tail Rotor Controls. A magnetic brake (7, figure 11-24) used in conjunction with a force gradient assembly is mounted in each control element. This magnetic brake is identical to as two other assemblies used in the cyclic control system except for the position of arm on brake. For adjustment, maintenance and replacement of this magnetic brake, refer to paragraph 11-73.

11-113. FORCE GRADIENT — TAIL ROTOR CONTROLS.

11-114. Description — Force Gradient Tail Rotor Controls. A force gradient assembly (6, figure 11-24) is used in the tail rotor controls in conjunction with a magnetic brake assembly. For adjustment, maintenance and replacement of force gradient assembly, refer to paragraph 11-80.

11-115. ADJUSTER ASSEMBLY.

11-116. Description — Adjuster Assembly. The pedal adjuster is used to change forward or aft position of tail rotor control pedals of pilot and copilot. A control knob is located just aft of the pilots and copilots cyclic sticks and just above cabin floor. Pilots and copilots adjuster assemblies are identical except pilots adjuster has a larger bellcrank to provide for attachment of control tube and force gradient.

Premaintenance Requirements for Adjuster Assembly

Conditions	Requirements
Model	All
Part No. or Serial No.	All
Special Tools	None
Test Equipment	Eddy Current Inspection Unit
Support Equipment	None
Minimum Personnel Required	Two
Consumable Materials	None
Special Environmental Conditions	None
References	TM 1-1520-256-23

11-117. Inspection — Adjuster Assembly (Installed).

a. Inspect adjuster assembly for nicks, scratches, cracks, loose or missing hardware, and corrosion. No cracks allowed. If a crack in the Adjuster Assembly is suspected, refer to TM 1-1520-256-23, Technical Manual Aviation Unit Maintenance (AVUM) and Aviation Intermediate Maintenance (AVIM) manual nondestructive inspection procedures for UH-1 helicopter series.

b. Inspect parts for bolt and bushing hole elongation.

c. Inspect for proper operation (movement of pedals) and binding.

11-118. Removal — Adjuster Assembly.

a. Remove pilots and copilots seats (paragraph 2-218 or 2-249).

b. Remove access doors (70, figure 2-18), and door at Station 37, B.L. 22.

c. Remove bolts (14, figure 11-26) and washers (2) securing adjuster knob to cabin floor

d. Remove cotter pin (7), nut (9), washers (2), and bolt (8), attaching end of tube (12).

e. Remove cotter pin (7), nut (16), washers (2), and bolt (17) attaching end of tube (15).

f. Remove cotter pin (7), nut (6), washers (2) and bolts (1) attaching control tube (5) to adjuster assembly.

g. Remove cotter pin (7), nut (13), washers (2), and bolt (20) attaching force gradient to adjuster assembly.

h. Remove cotter pin (7), nut (18), washers (2), and bolt (19) attaching control tube (3) to adjuster.

i. Remove nuts (10), aluminum washers (2), and bolts (11) attaching adjuster assembly to structure. Remove adjuster assembly.

11-119. Disassembly — Adjuster Assembly (AVIM).

a. Remove cotter pin (38) and nut (39, figure 11-27), washer (40), and bolt (43) attaching sprocket (41).

b. Remove key (42) from bolt (43).

c. Remove cotter pin (37), nut (36), washer (35), pin (28) and bolt (30) attaching sprocket (33).

d. Remove key (31) from bolt (30).

e. Remove chain (32) and sprockets (41 and 33) and gear (29).

f. Remove cotter pin (13), nut (12), washers (10 and 25), and bolt (5).

g. Remove cotter pin (26), nut (27), washers (3 and 4), and bolt (2) attaching plates (6 and 8).

h. Remove pin (22) and pin (24) attaching screw (23).

i. Remove link (9) and spacer (7).

j. Remove screw (16).

k. Remove pin (21) attaching shaft (20) and nut (11).

l. Remove nut (11), shaft (20), retainers (17 and 19), gear (18), and support (14).

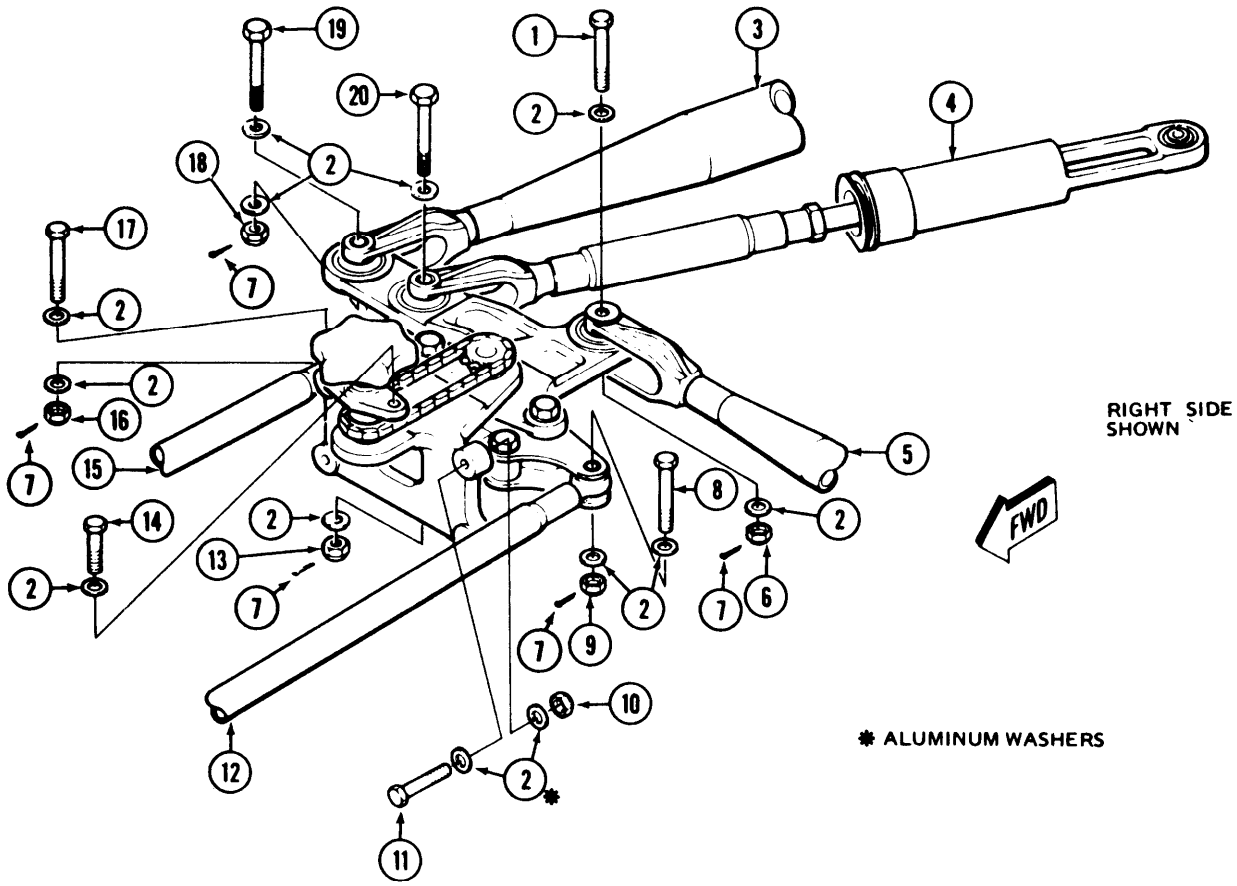

1. Bolt
2. Washer
3. Control tube (right side only)
4. Force gradient (right side only)
5. Control tube
6. Nut
7. Cotter pin
8. Bolt
9. Nut
10. Nut
11. Bolt
12. Control tube
13. Nut
14. Bolt
15. Control tube
16. Nut
17. Bolt
18. Nut
19. Bolt
20. Bolt

Figure 11-26. Adjuster Assembly — Tail Rotor Controls — Removal and Installation — Typical

11-120. Inspection — Adjuster Assembly (AVIM). a. Inspect chain (32, figure 11-27) for wear, damaged links, and corrosion.

b. Inspect sprockets (33 and 41) for wear and chipped or missing teeth.

c. Inspect keys (31 and 42) for wear.

d. Inspect bellcrank (1) and support (34) for corrosion and damage.

e. Inspect bushings in bellcrank (1), upper plate (6), lower plate (8), SUPPORT (14), SUPPORT assembly (34) for wear, elongation, and looseness. Maximum allowable bushing wear is **0.002** inch over 1/4 of circumference of bore.

11-121. Repair or Replacement — Adjuster Assembly (AVIM). a. Replace components that do not meet inspection requirements.

b. Repair adjuster assembly within limits specified on figure 11-28.

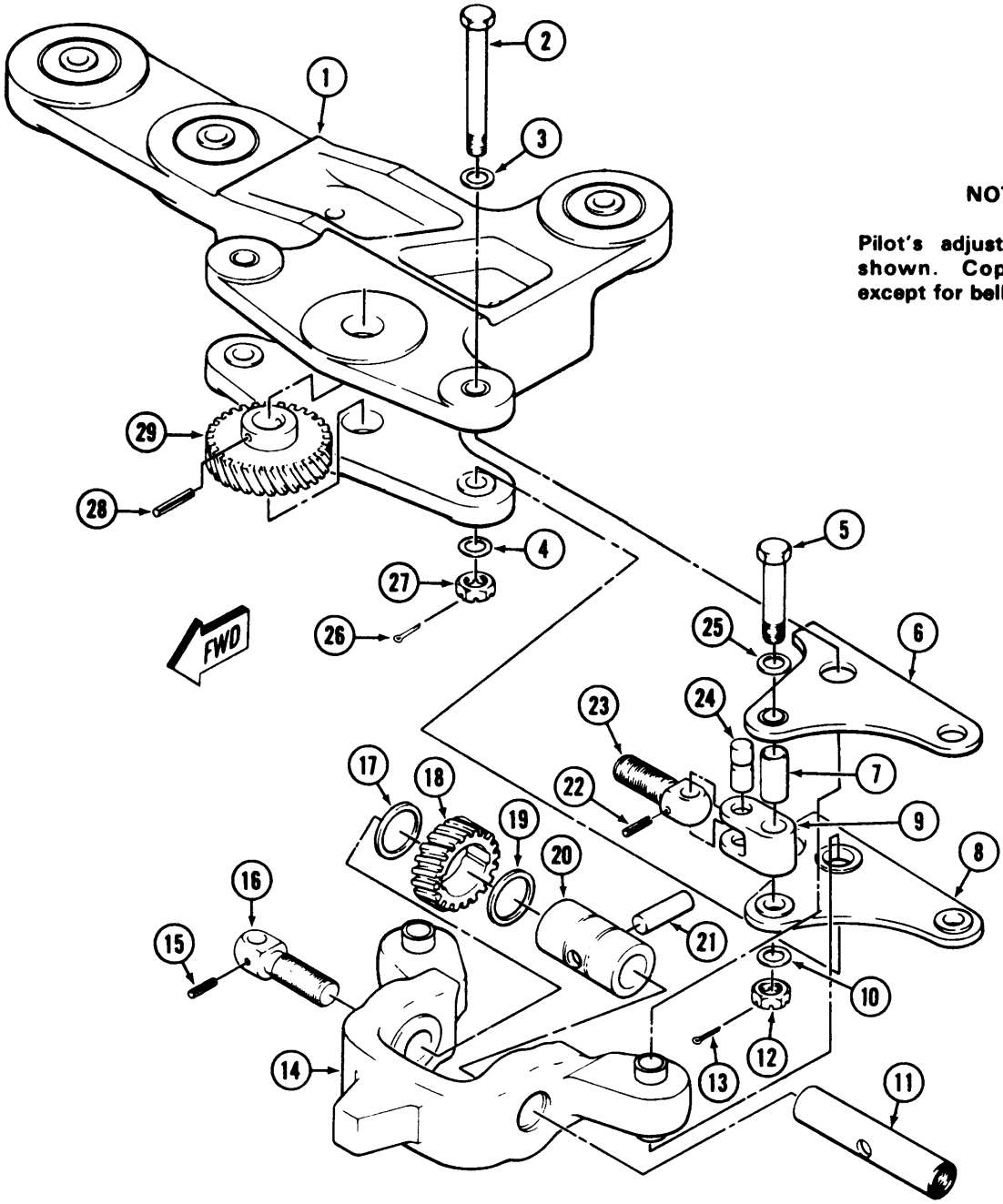

NOTE

Pilot's adjuster assembly shown. Copilots same except for bellcrank.

1. Bellcrank
2. Bolt
3. Washer
4. Washer
5. Bolt
6. Plate
7. Spacer
8. Plate
9. Link
10. Washer
11. Nut
12. Nut
13. Cotter pin
14. Support
15. Pin
16. Screw
17. Retainer
18. Gear
19. Retainer
20. Shaft
21. Pin
22. Pin
23. Screw
24. Pin
25. Washer
26. Cotter pin
27. Nut
28. Pin
29. Gear

Figure 11-27. Adjuster Assembly - Tail Rotor Controls - Disassembly and Assembly (Sheet 1 of 2)

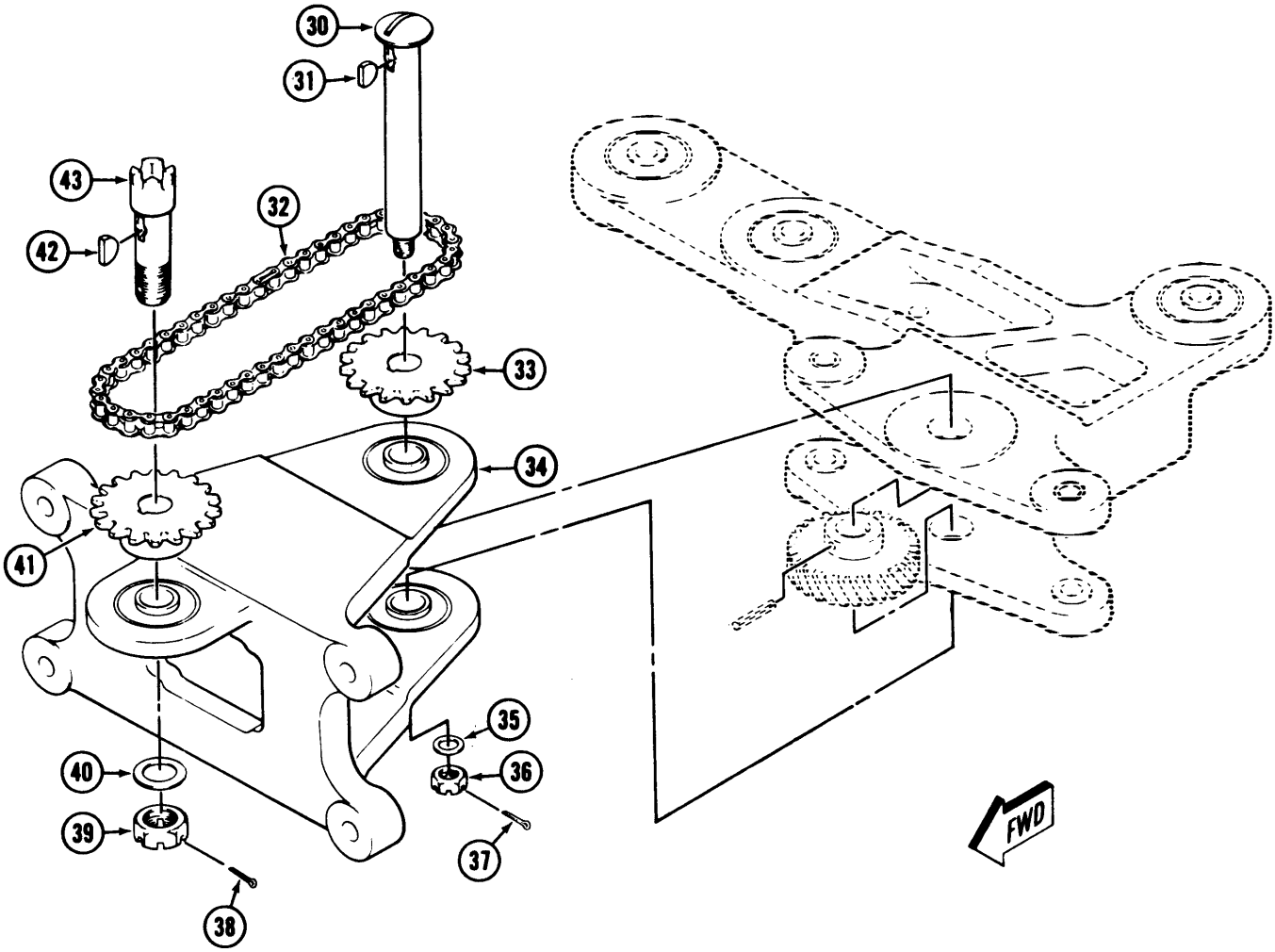

30. Bolt
31. Key
32. Chain
33. Sprocket
34. Support
35. Washer
36. Nut
37. Cotter pin
38. Cotter pin
39. Nut
40. Washer
41. Sprocket
42. Key
43. Bolt

Figure 11-27. Adjuster Assembly - Tail Rotor Controls - Disassembly and Assembly (Sheet 2 of 2)

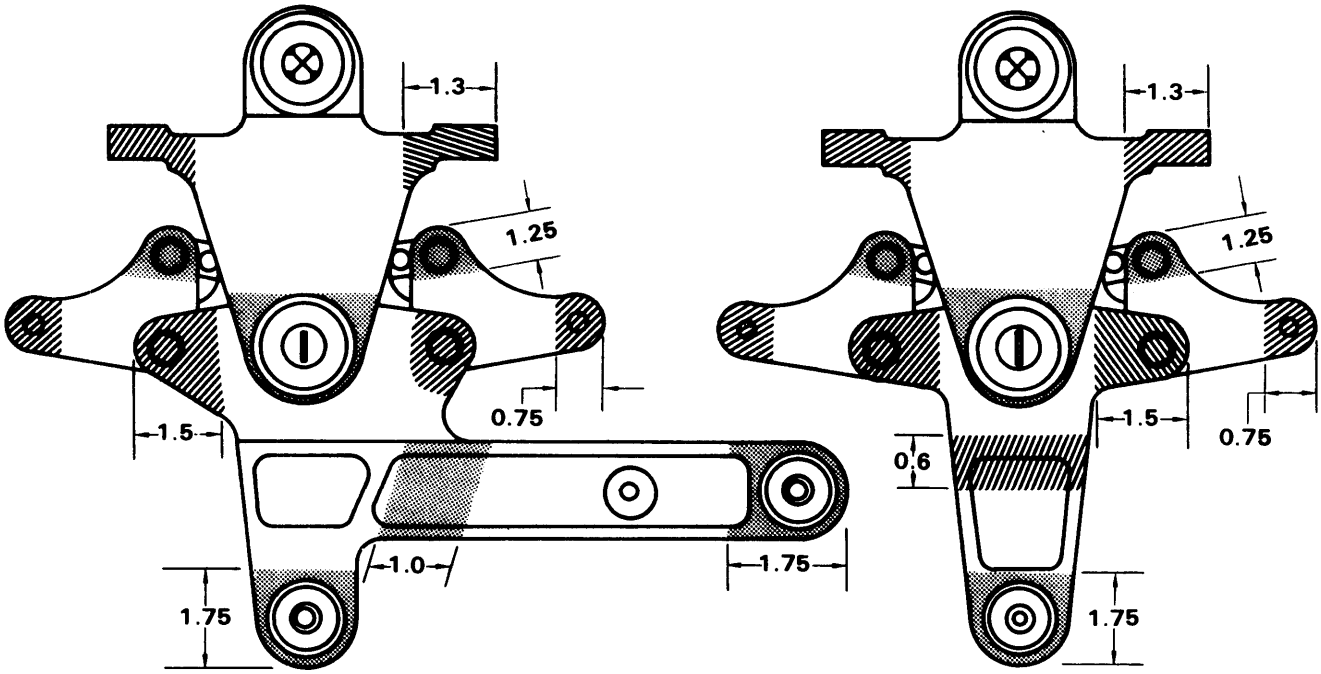

204-001-762-13
ADJUSTER ASSEMBLY

204-001-762-15
ADJUSTER ASSEMBLY

DAMAGE AREA REPAIR SYMBOLS

TYPE OF DAMAGE			
MECHANICAL DAMAGE (AFTER CLEAN-UP)	0.015 IN.	0.010 IN.	0.005 IN.
CORROSION DAMAGE (BEFORE CLEAN-UP)	0.0075 IN.	0.005 IN.	0.0025 IN.
(AFTER CLEAN-UP)	0.015 IN.	0.010 IN.	0.005 IN.
MAXIMUM AREA PER FULL DEPTH REPAIR	1 IN. SQ.	0.10 IN. SQ.	0.10 IN. SQ.
NUMBER OF REPAIRS	ONE PER AREA	ONE PER AREA	ONE PER AREA
EDGE CHAMFER	0.05 BY 0.05	0.04 BY 0.04	
BORE DAMAGE	0.002 INCH FOR ONE-FOURTH CIRCUMFERENCE		

NO CRACKS ALLOWED
ALL DIMENSIONS IN INCHES UNLESS OTHERWISE SPECIFIED

Figure 11-28 Wear and Damage Limits — Adjuster Assemblies — Tail Rotor Controls

11-122. Assembly — Adjuster Assembly (AVIM). a. Place retainers(17 and 19, figure 11-27) and gear (18) on shaft (20) and place inside support **(14).**

b. Slide nut (11) into support (14) and inside shaft (20) with the 45 degree chamfer on the opposite side of arm of bellcrank assembly (1).

c. Place pin (21) to attach shaft (20) and nut(11).

d. Install screw (16).

e. Install spacer (7), and link (9).

f. Position screw (23) in link (9) and install pin (24). Secure pin (24) with split pin (22).

g. Install nut (27), washers (3 and 4), and bolt(2) to attach plates (6 and 8). Tighten nut and install cotter pin (26).

h. Install nut (12), washers (10 and 25), and bolt (5). Tighten nut and install cotter pin (13).

i. Position bellcrank (1), with inner gear (29) in bellcrank (1), to support assembly (34).

j. Install bolt (30), with key (31) and sprocket (33) through support (34), bellcrank(1) and inner gear (29).

k. Install new pin (28) through inner gear (29) and bolt (30). Stake pin on both sides.

l. Position chain (32) on aft sprocket (33).

m. Assemble bolt (43), key (42), and forward sprocket (41). Position forward sprocket inside chain and install bolt through support (34).

n. Install washer (40) and nut (39). Tighten nut and install cotter pin (38).

o. Install washer (35) and nut (36). Tighten nut and install cotter pin (37).

11-123. Installation — Adjuster Assembly a. Inspect structural intercostal mounting surfaces of adjuster assembly (figure 11-26) to determine if tape (C278) is torn or missing. Install new tape (C278) if torn or missing.

N O T E

Ensure tape (C278) covers entire faying surface area and extends at least 1/4 inch beyond joint edges.

b. Secure adjuster assembly to structure using bolts (11, figure 11-26), aluminum washers (2), and nuts (10).

c. Place tube (12) on adjuster assembly and attach with bolt (8), washers (2), and nut (9). Secure with cotter pin (7).

d. Install tube (15) and attach bolt (17), washers (2), and nut (16). Secure with cotter pin (7).

e. Install control tube (5) on adjuster assembly using bolt (1), washers (2), and nut (6). Secure with cotter pin (7).

f. Install control tube (3) using bolt (19), washers (2), and nut (18). Secure with cotter pin (7).

g. Install force gradient (4) using bolt (20), washers (2), and nut (13). Secure with cotter pin (7).

h. Place knob assembly over adjuster and attach securely to floor with bolts (14) and washers (2)

i. Install access doors (70, figure 2-18), and door at Station 37, B.L. 22.

j. Install pilots and copilots seats (paragraph 2-223 or 2-252).

11-124. CABLES – TAIL ROTOR CONTROLS.

11-125. Description — Cables — Tail Rotor Controls. Tail rotor control cables are connected between a quadrant, mounted in front end of tail boom, and ends of a chain assembly which actuates the tail rotor control quill and pitch change rod. Cable diameter for this installation is 1/8 inch. Left and right cables are each in two sections, connected by turnbuckles with speed rig type barrels which can be disconnected and reconnected without disturbing cable tension adjustment provided the **threaded turnbuckle adjustment is not disturbed. Cable connectors are located on front of tail boom, vertical fin under drive shaft access door.**

NOTE

When lockwiring turnbuckles, refer to figure 11-30 (sheet 2 of 2) and TM 1-1500-204-23 (Series).

11-126. Adjustment - Cables - Tail Rotor Controls

NOTE

Tail rotor control cable will be adjusted during rigging (paragraph 11-157).

11-127. Inspection - Cables - Tail Rotor Controls.

a. Open access cover (14, Figure 2-18) and remove access covers (13, 16, 17 and 18).

b. Inspect cables for worn sections and broken strands (refer to TM 1-1500-204-23 (Series)).

NOTE

A new commercially manufactured cable assembly may be flush with ball. This is not cause for rejection.

c. Inspect pulleys for flat spots, damage, and tight or worn bearings.

d. Inspect grommets for wear and signs of misalignment.

e. Inspect supports for condition, security and elongation of pulley pivot holes.

11-128. Removal - Cables - Tail Rotor Controls.

a. Open access cover (14, Figure 2-18) and remove access covers (13, 16, 17, and 18).

b. Disconnect end of cable assemblies (4, figure 11-29) barrel assembly (5) by removing lockwire (6).

c. Remove cotter pin (1) and pin (2) attaching opposite end of cables assemblies (4) to quadrant (3).

c.1. To facilitate removal of bolt (28), remove four nuts (44) washers (45), and bolts (46) attaching pulley bracket assembly (43) to structure.

d. Remove cotter pin (1), nut (32), washers (27), and bolt (31), attaching pulley (26).

e. Remove cotter pin(1), nut (30), washers (27), and bolt (28) attaching pulley (26).

f. Remove cable assemblies (4).

g. Remove cotter pin (1), washer (9) attaching pin (15).

h. Remove cotter pin (1) nut (14), washers (9) and bolt (11) attaching pulley (16).

i. Remove cotter pin (1), nut (13), washers (9), and bolt (10) attaching pulley (12).

j. Remove cotter pin (1), nuts (19), washers (20), and bolts (17) attaching cable assemblies (7) to chain assembly (18).

k. Remove cable assemblies (7).

11-129. Repair or Replacement - Cables - Tail Rotor Controls.

a. Replace cable assembly if it does not meet inspection requirements outlined in paragraph 11-127.

b. Replace cable assembly if evidence of corrosion exists where end fitting is swaged on cable.

11-130. Installation - Cables Tail Rotor Controls

a. Attach cable assemblies (7, Figure 11-29) to chain (18), using bolt (17), washer (20), and nut (19). Nut should be fingertight, allowing clevis to realign itself when deflected. Secure with cotter pin (1). Ensure nut and cotter pin installation is on inboard side next to driveshaft.

b. Install cable 7 into pulley 12 groove.

c. Attach pulley (12) using bolt (10), washers (9) and nut (13). Secure with cotter pin (1).

d. Attach pulley (16) using bolt (11), washers (9), and nut (14). Secure with cotter pin (1).

NOTE

If clevis pin is a loose fit in the pulley bracket, proseal may be used on installation to provide a close fit and to prevent looseness.

e. Align cable assemblies on pulleys.

f. Attach pin (15) to pulley mount using washer(9) and cotter pin (1).

g. Place left cable (4) on pulley (26) and attach pulley using bolt (28), washer (27) and nut (30). Secure with cotter pin (1).

h. Place right cable (4) on pulley (26) and attach pulley using bolt (31), washers (27), and nut (32). Secure with cotter pin (1).

h.1 Attach pulley bracket assembly (43) to structure using four bolts (46), washers (45) and nuts (44).

i. Place cables (4) on quadrant assembly (3) and attach cables using pin (2). Secure with cotter pin (1).

CAUTION

Do not use gripping type tools (i.e. slip joint, pliers, vise grip, and etc,) to connect cable and barrel assemblies. Permanent damage to tail rotor controls may occur.

j. Attach end of cables (4) with barrel assembly (5). Secure with lockwire (6), (C155).

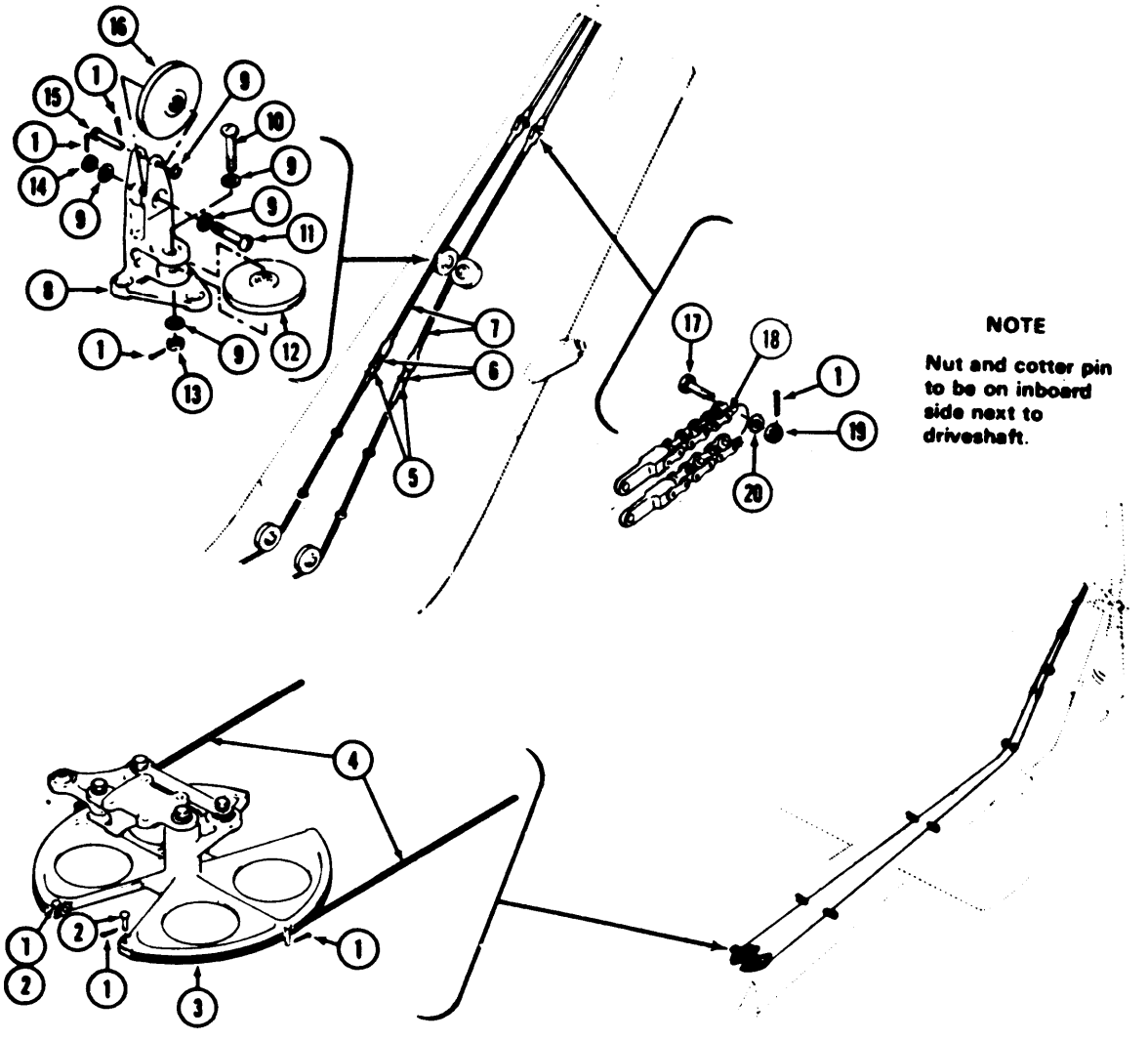

1. Cotter pin
2. Pin
3. Quadrant assembly
4. Cable assembly
5. Barrel assembly
6. Lockwire
7. Cable assembly
8. Pulley bracket
9. Washer
10. Bolt
11. Bolt
12. Pulley
13. Nut
14. Nut
15. Pin
16. Pulley
17. Bolt
18. Chain assembly
19. Nut
20. Washer

Figure 11-29. Cable Assemblies – Tail Rotor Controls — Removal and Installation (Sheet 1 of 2)

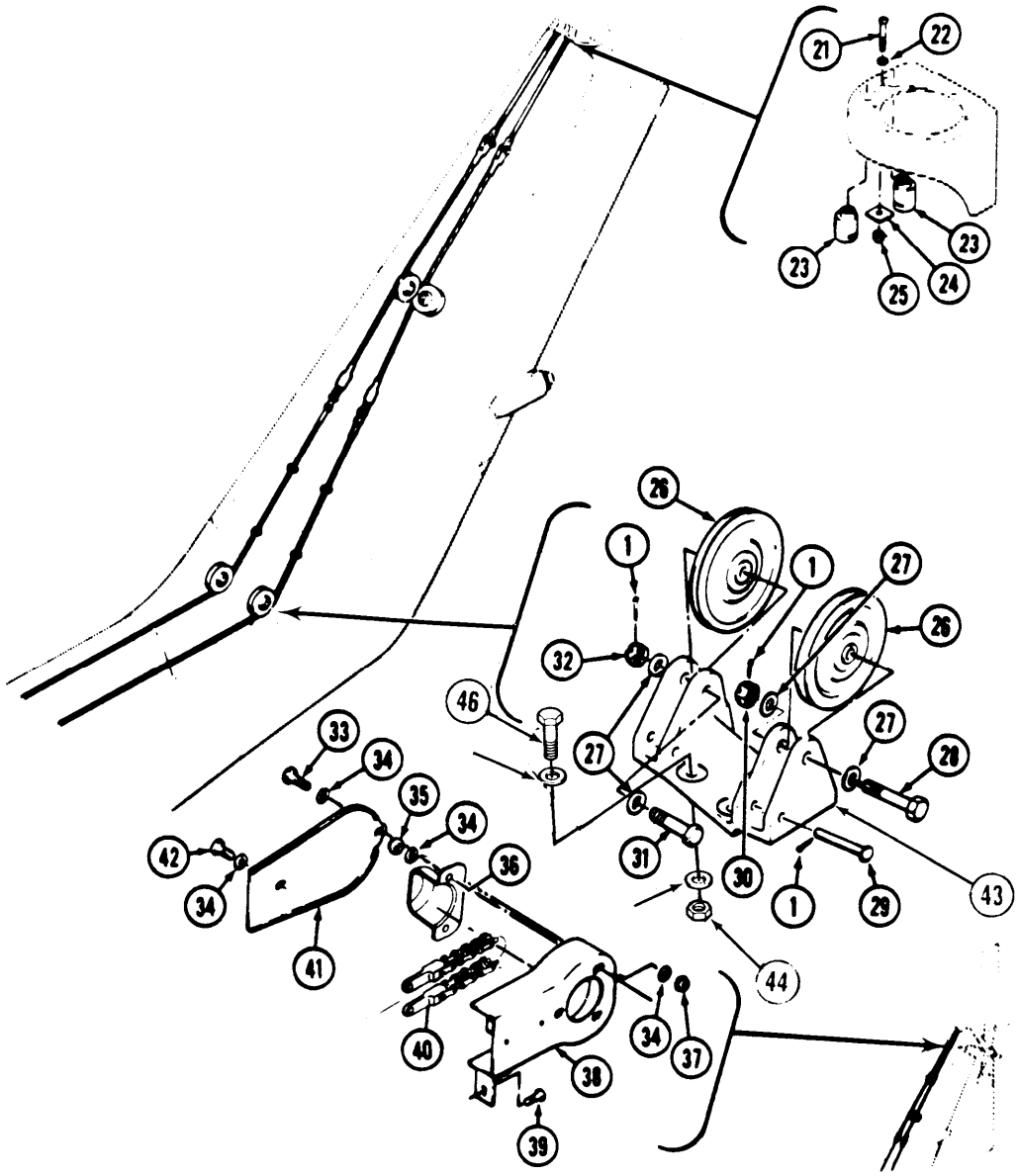

21. Screw
22. Washer
23. Fairlead
24. Spacer
25. Nut
26. Pulley
27. Washer
28. Bolt
29. Pin
30. Nut
31. Bolt
32. Nut
33. Bolt
34. Washer
35. Nut
36. Guard
37. Nut
38. Housing pan
39. Screw
40. Chain assembly
41. Cover
42. Bolt
43. Pulley bracket assembly
44. Nut
45. Washer
46. Bolt

Figure 11-29. Cable Assemblies — Tail Rotor Controls — Removal and Installation (Sheet 2 of 2)

NOTE

Speed rigs should be disconnected when adjusting cable tension, then reconnected and lockwired (C155) after adjustment is made.

k. Adjust cable tension **40 TO 60** pounds by adjusting speed rigs equally. Lockwire (C155) speed rigs lower section (figure 11-30, sheet 2).

l. Lubricate chain with cloth moistened with oil (C166), (C168), or (C136).

m. Rig cables in accordance with paragraphs 11-109 and 11-110.

n. Install access doors (16, 17, and 18, Figure 2-18) and close access cover (14).

11-131. PULLEYS — TAIL ROTOR CONTROLS.

11-132. Description — Pulleys — Tail Rotor Controls. There are four phenolic pulleys located in the tailboom at fin station 35.10 and 75.33. The pulleys are identical and are attached to brackets with standard hardware.

11-133. Inspection — Pulleys — Tail Rotor Controls.

a. Inspect pulleys for excessive grooving by visual examination of the surface, and by rotating pulley and observing if the cable twists, rotates, or jumps up and down, as a result of interplay between the grooves of the pulley and the lay of the cable.

b. Inspect pulley bearings for roughness, binding, noise, rust, lubricant leakage, and excessive looseness.

11-134. Removal — Pulleys — Tail Rotor Controls. Refer to paragraph 11-128 for removal.

11-135. Repair or Replacement — Pulleys — Tail Rotor Controls. Replace pulley if damaged or worn.

11-136. Installation — Pulleys — Tail Rotor Controls. Refer to paragraph 11-130 for installation.

11-137. CONTROL QUADRANT.

11-138. Description — Control Quadrant. The tail rotor control quadrant (13, figure 11-30) is located in the upper forward section of the tail boom. The quadrant is utilized to interconnect the push-pull tubes and the tail rotor control cables.

11-139. Removal — Control Quadrant.

a. Remove cable assemblies (paragraph 11-128).

b. Disconnect control tube (14) from bellcrank (8) by removing cotter pin (1), bolt (4), washers (3), and nut (2).

c. Remove link assembly (10) by removing cotter pins (1), bolts (15), washers (16), and nuts (17).

d. Remove cotter pin (1), bolt (5), washers (6), and nut (7), and remove bellcrank (8) from upper support assembly.

e. Remove cotter pin (1), bolt (18), washers (19), and nut (20) securing quadrant in supports.

f. Remove quadrant (13) from helicopter.

g. Remove bolts (21), aluminum washers (22), washers (23), and nuts (24) securing lower support assembly (26) to bulkhead.

h. Remove lower support assembly (26) and shim (25) from helicopter. Retain shim for reassembly.

Premaintenance Requirements for Control Quadrant

Conditions	Requirements
Model	All
Part No. or Serial No.	All
Special Tools	None
Test Equipment	Eddy Current Inspection Unit
Support Equipment	None
Minimum Personnel Required	Two
Consumable Materials	None
Special Environmental Conditions	None
References	TM 1-1520-256-23

11-140. Inspection — Control Quadrant.

a. Inspect for visible nicks and scratches (figure 11-31).

b. Inspect quadrant, support, bellcrank and link assembly for mechanical damage and corrosion (figure 11-31).

c. Inspect the quadrant for cracks. No cracks allowed. If a crack in the Control Quadrant is suspected, refer to TM 1-1520-256-23, Technical Manual Aviation Unit Maintenance (AVUM) and Aviation Intermediate Maintenance (AVIM) manual nondestructive inspection procedures for UH-1 helicopter series.

d. Inspect all bolt holes for elongation (figure 11-31).

e. Inspect bearings for wear and roughness (figure 11-44).

f. Support P/N 204-001-793-5 with shims is to be mounted on a table with pivot bolt for quadrant P/N 204-001-779-5 mounted vertically. A dial indicator is to be used to measure warpage of quadrant while it is rotated before it is installed in the tailboom. The warpage tolerance is to be ±.050 inch.

11-141. Repair or Replacement — Control Quadrant. Repair or replace control quadrant in accordance with limits specified in figure 11-31.

11-142. Installation — Control Quadrant.

a. Install lower support assembly (26, figure 11-30) and shim (25), and secure to bulkhead with bolts (21), aluminum washers (22), washers (23), and nuts (24). Ensure that shim contains same number of laminations as when removed.

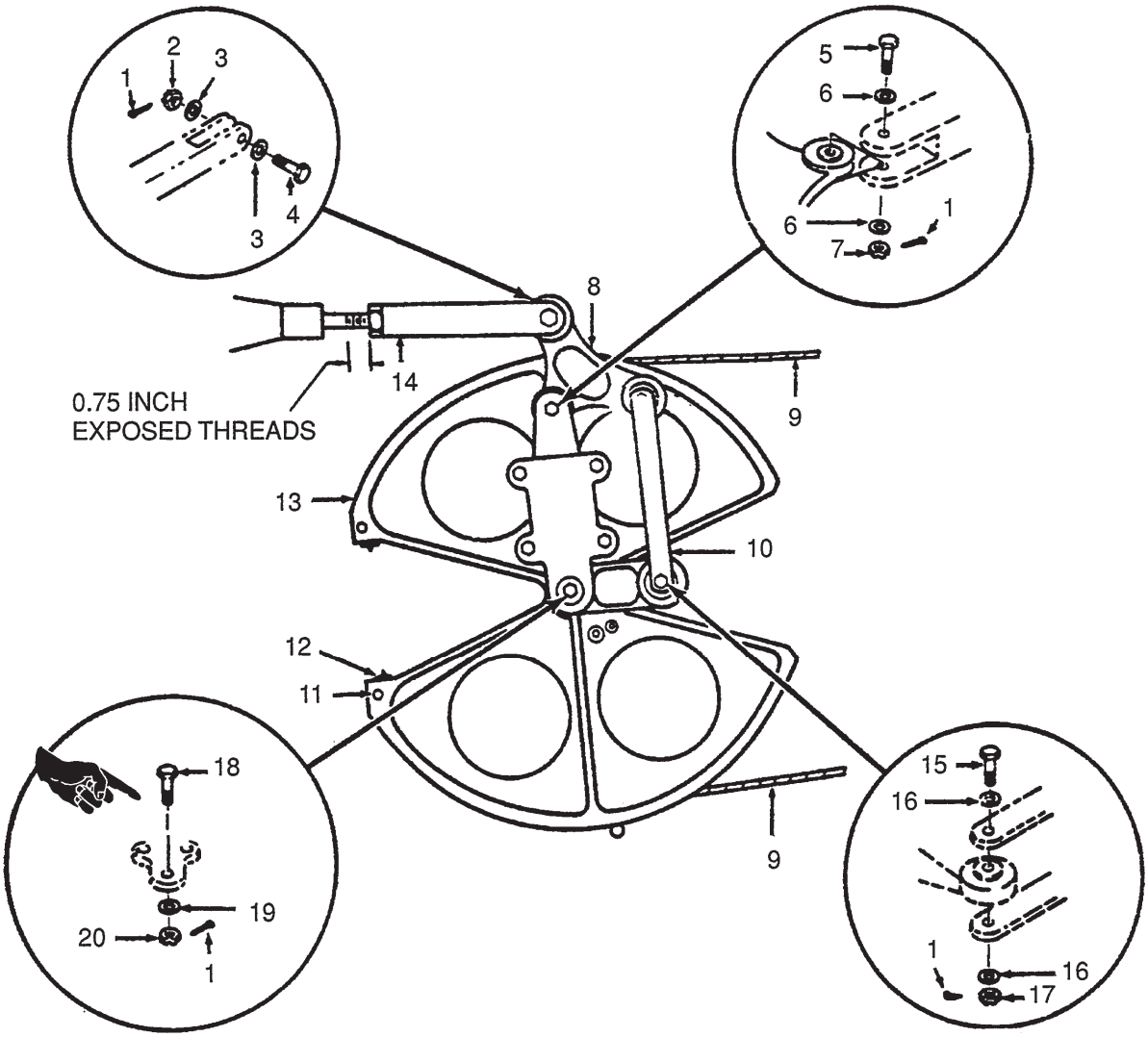

1.	Cotter pin	11.	Cotter pin (2 reqd)
2.	Nut	12.	Pin (2 reqd)
3.	Washer	13.	Quadrant
4.	Bolt	14.	Control tube
5.	Bolt	15.	Bolt
6.	Washer	16.	Washer
7.	Nut	17.	Nut
8.	Bellcrank	18.	Bolt
9.	Cable assembly (2 reqd)	19.	Washer
10.	Link assembly	20	Nut

Figure 11-30. Quadrant Assembly — Tail Rotor Controls — Removal and Installation (Sheet 1 of 2).

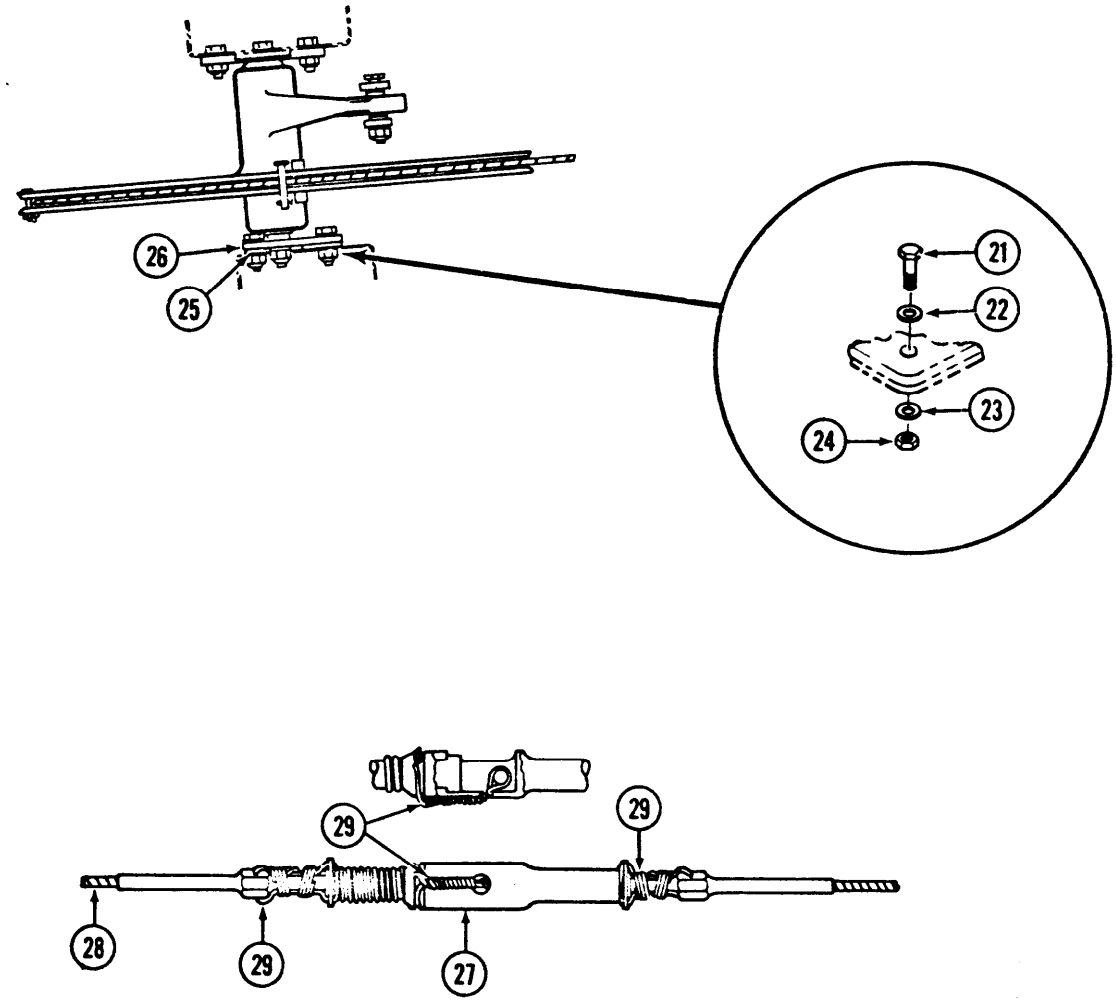

21. Bolt (3 reqd)
22. Aluminum washer (3 reqd)
23. Washer (3 reqd)
24. Nut (3 reqd)
25. Shim
26. Lower support assembly
27. Speed rig (2 reqd)
28. Cables (2 reqd)
29. Lockwire (C127)

Figure 11-30. Quadrant Assembly — Tail Rotor Controls — Removal and Installation (Sheet 2 of 2)

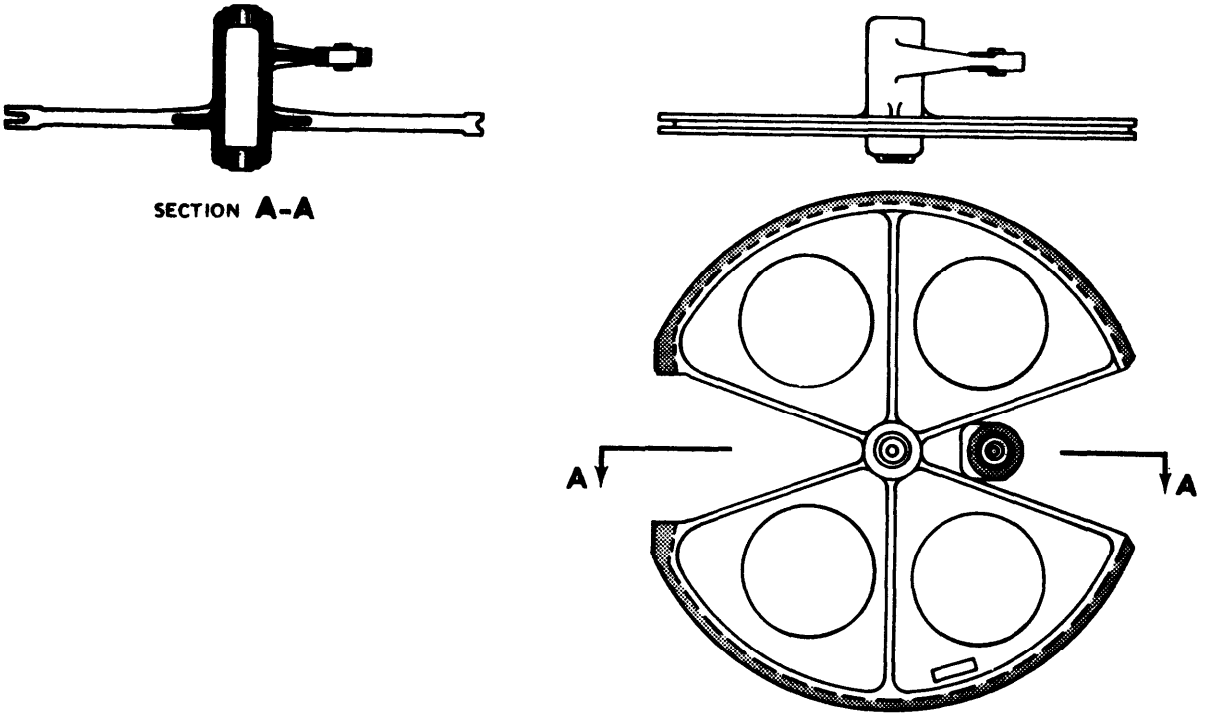

204-001-779-5
QUADRANT ASSEMBLY

DAMAGE AREA REPAIR SYMBOLS

TYPE OF DAMAGE		
MECHANICAL DAMAGE (AFTER CLEAN-UP)	0.015 IN.	0.010 IN.
CORROSION DAMAGE (BEFORE CLEAN-UP)	0.0075 IN.	0.005 IN.
(AFTER CLEAN-UP)	0.015 IN.	0.010 IN.
MAXIMUM AREA PER FULL DEPTH REPAIR	1 IN.SQ.	0.10 IN. SQ.
NUMBER OF REPAIRS	ONE PER AREA	ONE PER AREA
EDGE CHAMFER	0.05 BY 0.05	0.04 BY 0.04
BORE DAMAGE	0.002 INCH FOR ONE-FOURTH CIRCUMFERENCE	

Figure 11-31. Wear and Damage Limits-Quadrant Assembly—Tail Rotor Controls

b. Position quadrant (13) in position between upper and lower support assemblies, and install bolt **(18),** washer (19) and nut (20).

c. Check for **0.010** inch minimum end clearance between quadrant (13) and lower support assembly (26). Secure nut (20) with cotter key (1).

d. Connect bellcrank (8) to upper support assembly with bolt (5), washers (6), nut (7). Secure with cotter pin (1).

e. Connect link assembly (10) to quadrant (13) and to bellcrank (8) with bolts (15), washers (16) and nuts (17). Secure with cotter pins (1).

f. Connect control tube (14) to bellcrank (8) with bolt (4), washers (3) and nut (2). Secure with cotter pin (1).

g. Install cable assemblies (paragraph 11-130).

h. Rig tail rotor control cables in accordance with paragraphs 11-109 and 11-110.

i. Secure cable terminals to speed rigs (27) with lockwire (29, C155).

j. Ensure cable does not twist chain. Swivel is located between chain and cable. When adjusting tension cable can become twisted. As it works the twist will transfer into the chain.

11-143. CONTROL TUBE AND QUILL - TAIL ROTOR.

11-144. Description - Control Tube and Quill - Tail Rotor. Tail rotor blade pitch control is accomplished by means of a control quill assembly mounted in right side of 90 degree gearbox, with a control tube extending through hollow rotor drive shaft to a pitch control cross-head and links connected to tail rotor. Control quill has a sprocket, actuated by a chain attached to control cables, with a worm thread engagement to control tube. Rotation of sprocket is transmitted through tube as linear motion at crosshead and pitch change links. Chain and sprocket are enclosed by a metal housing pan with a removable cover for access (figure 11-32).

NOTE

The following procedures apply to tail rotor control chain, PN 1560-UH-1-752-1 (roller type chain).

11-145. Inspection Tail Rotor Pitch Control.

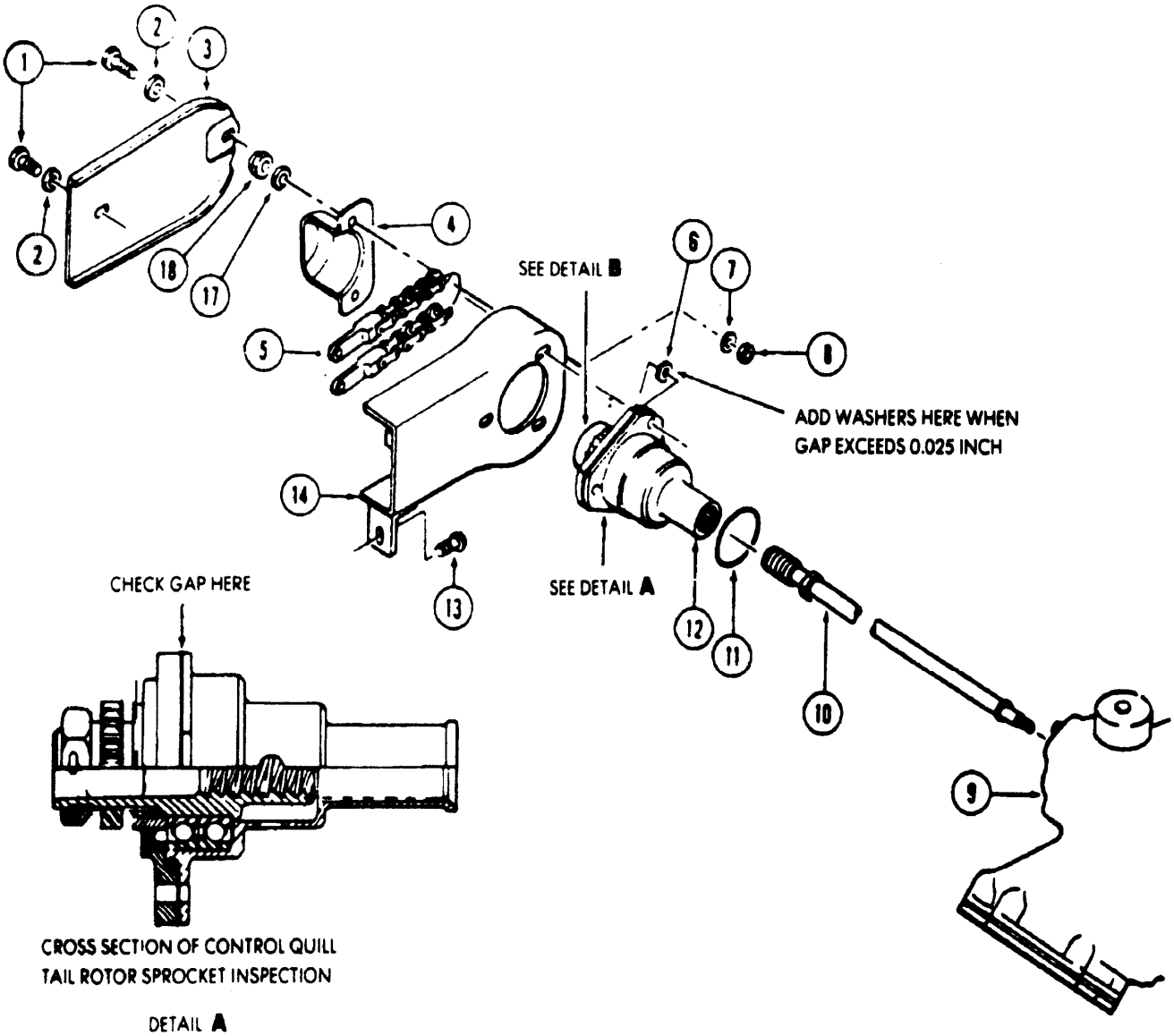

1. Bolt
2. Washer
3. Housing Cover
4. Sprocket guard (roller type chain install)
5. Control chain (roller type)
6. Washer
7. Washer
8. Nut
9. Gearbox Case
10. Control Tube
11. Packing
12. Control quill
13. Screw
14. Housing pan
15. Deleted
16. Deleted
17. Washer
18. Nut

Figure 11-32. Tail Rotor Control Tube and Quill — Removal and Installation

NOTE

Apply following procedure to determine amount of looseness between internal spline of tail rotor control head slider and rotor shaft spline and looseness in pitch change rod bearings and in pitch change threads.

(1) Mount a dial indicator on tail rotor shaft with indicator against crosshead as illustrated in figure 11-32.1.

(2) With left control pedal held full forward, manually test crosshead for radial play not to exceed **0.030** inch.

(3) With full right pedal, repeat check for radial play not to exceed **0.055** inch.

(4) With pedals held neutral, manually test for axial play (along shaft centerline without radial motion) not to exceed **0.018** inch. Excessive axial play would Indicate worn or base pitch change rod bearings or worn pitch change threads.

CAUTION

Quill housing (10, figure 11-33) is soft metal. Improper use of tools to remove housing may cause damage to quill housing.

11-146. Removal — Control Tube and Quill — Tail Rotor. a. Remove tail rotor pitch control crosshead assembly (paragraph 5-92). Be sure bearings and retaining nut are removed from pitch control tube.

b. Remove two bolts (1, figure 11-32), washers (2 and 7), nut (8), and cover (3) from housing pan (14). Remove screw (13) from bracket of pan (14).

c. Disconnect speed rigs to allow slack in control cables. Before removing chain from sprocket, mark the sprocket with grease pencil to ensure proper line up of teeth upon reinstallation.

NOTE

Control tube (10) may be removed through gearbox output shaft without removing control quill (12). Rotate sprocket to disengage.

d. Remove three nuts (18), washers (17) and guard (4 or 16) from gear case studs.

NOTE

A 5/16 inch deep well socket maybe bored out to fit over the 1/4 inch stud if difficulty is experienced in the removal of nuts (18).

e. Remove pan.

f. Pull control quill (12) with packing (11) and control tube (10) out of gear case (9). Cover open port. Detach tube from quill by turning sprocket to disengage thread.

11-147. Disassembly — Control Tube and Quill — Tail Rotor

Premaintenance requirements for disassembly of control quill

Conditions	Requirements
Model	All
Part No. or Serial No.	All
Special Tools	(T43)
Test Equipment	None
Support Equipment	Surface block, Vee block, dial indicator, recirculating type automatic oven.
Minimum Personnel Required	One
Consumable Materials	(C261), (C162), (C277), (C246), (C271)
Special Environmental Conditions	None

a. If not previously removed, remove cotter pin (20) and retaining nut (19, figure 11-33) while holding sprocket (18) in padded jaws of vise or other suitable tool. Remove sprocket.

b. Remove retainer (17) with seal (16) and press out seal with hollow end of tool (T43).

c. Remove spacer (15) and packing (14). Use tool (T43) to press duplex bearings (13) from control nut (12).

11-148. Cleaning — Control Tube and Quill — Tail Rotor

WARNING

Cleaning materials are flammable and toxic. Avoid skin contact and breathing of solvent vapors.

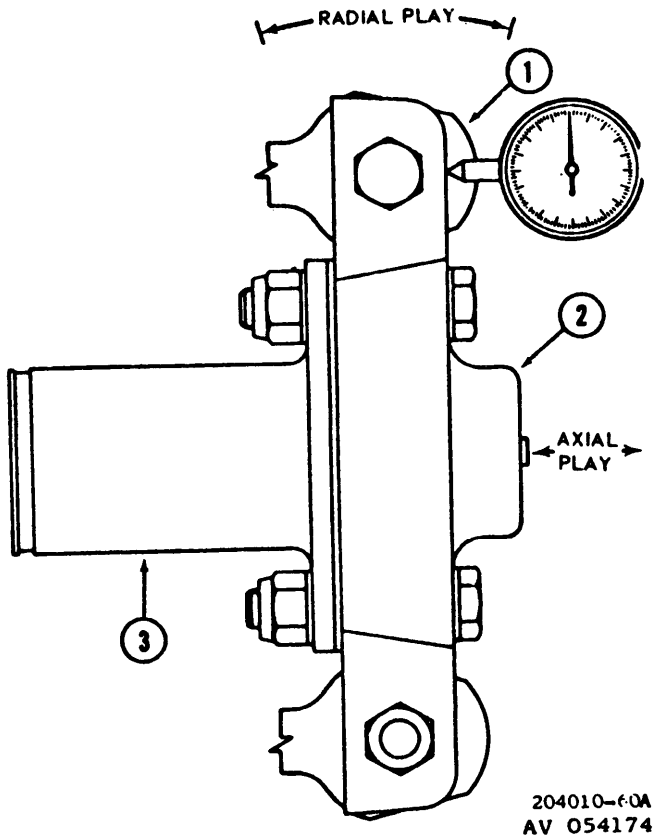

1. Pitch Change Link
2. Crosshead
3. Slider

Figure 11-32.1. Checking Tail Rotor Pitoh Control for Looseness

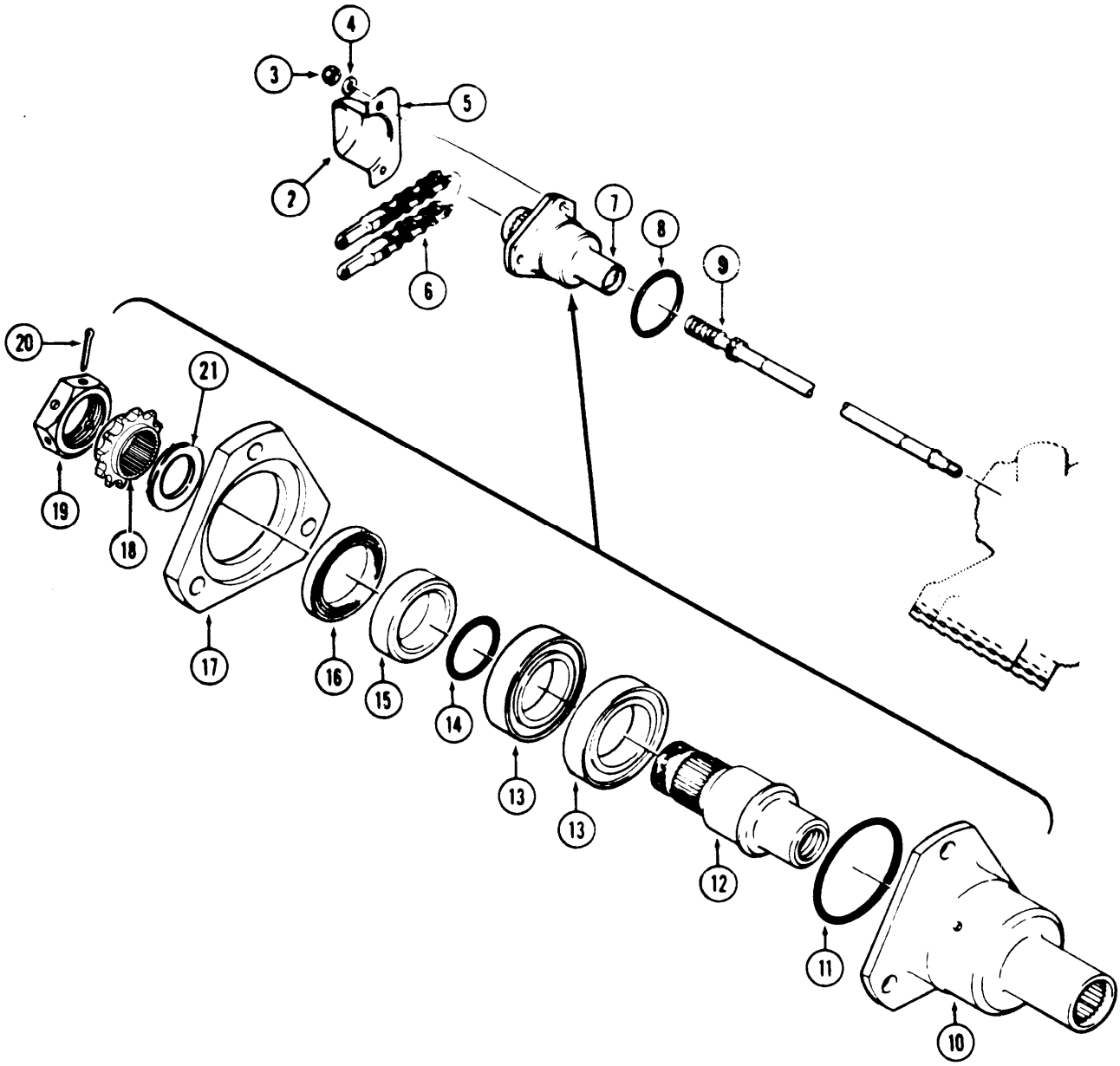

1. Deleted
2. Deleted
3. Nut
4. Washer
5. Sprocket guard (roller type chain install)
6. Control chain (roller type chain)
7. Control quill
8. Packing
9. Control tube
10. Quill housing
11. Preformed packing
12. Control nut
13. Duplex bearings
14. Preformed packing
15. Spacer
16. Seal
17. Bearing retainer
18. Sprocket
19. Retaining nut
20. Cotter pin
21. Washer

Figure 11-33. Control Quill – Exploded View

a. Clean disassembled parts with solvent (C261). Visually inspect all parts for damage or excessive wear. Spacer (15, figure 11-33) may be reversed when worn excessively on one side.

b. Dry with filtered compressed air.

Premaintenance Requirements for Control Quadrant

Conditions	Requirements
Model	All
Part No. or Serial No.	All
Special Tools	None
Test Equipment	Fluorescent Penetrant Method Eddy Current Inspection Unit Magnetic Particle Method
Support Equipment	None
Minimum Personnel Required	Two
Consumable Materials	None
Special Environmental Conditions	None
References	TM 1-1520-256-23

11-149. Inspection — Control Tube and Quill — Tail Rotor.

a. Visually inspect all parts for damage or excessive wear. Spacer (15, Figure 11-33) may be reversed when worn excessively on one side.

b. Inspect bearings for smooth operation.

c. Inspect control nut, control tube and quill housing for burrs or chipping of threads and splines. Inspection of spline wear shall be done visually. If spline teeth are worn such that less than half (50%) of each tooth contact area remains, the part should be rejected. The control tube or the quill housing can be replaced independently of each other.

d. Inspect the following parts by magnetic particle (Code M) or fluorescent penetrant (Code F) methods (Figure 11-33) if cracks are suspected. Refer to TM 43-0103. Alternatively refer to TM 1-1520-256-23, Technical Manual Aviation Unit Maintenance (AVUM) and Aviation Intermediate Maintenance (AVIM) manual nondestructive inspection procedures for UH-1 helicopter series.

ITEM	NOMENCLATURE	CODE
2, 5	Sprocket Guard	F
9	Control	M
10	Quill Housing	F
19	Retaining Nut	M
18	Sprocket	F
17	Bearing Retainer	F
15	Spacer	M
12	Control Nut	F

e. Inspect parts dimensionally (figure 11-34). Also check control tube for out-of-round condition. Mount control tube on centers, take measurement at mid-point of control tube, measurement not to exceed **0.020 T.I.R** (Total Indicator Reading).

f. Inspect full length of chain using 16 pitches in center of chain. If length exceeds **6.18** inches, replace the chain.

g. Inspect chain as follows:

WARNING

Cleaning materials are flammable and toxic. Avoid skin contact and breathing of solvent vapors.

(1) Clean chain with solvent (C261) and stiff bristle brush. Air dry.

(2) Inspect for broken links and missing pin heads.

(3) Inspect outer links for cracks using a good light source and a ten power magnifying glass. Special attention will be given the chain that travels over the sprocket of the control quill and 6 inches either side of this section. Any cracks or broken links on any portion of the chain is cause for rejection of the chain.

(4) Nicks and scratches in the link plates up to **.010** inch in depth are acceptable. No clean up is required.

(5) Wear and pitting of the bushings is acceptable provided it does not result in exposure of the pin or affect operation of the chain, i.e., binding or climbing on the sprocket.

(6) Loose bushings, i.e., those free to turn in the link plates, are unacceptable and cause for chain rejection.

(7) Any crack in either the link plates or bushings is unacceptable and cause for chain rejection.

NOTE

The bushings are roll formed from flat stock resulting in a lengthwise seam which may in some cases be misinterpreted as a crack. One such indication per bushing is therefore considered normal and acceptable. It is also permissible for this seam to be open up to a maximum of 0.020 inch.

(8) Wear of pin heads is acceptable provided sufficient material remains to ensure pin security, i.e., wear of overlapping area to a feather edge is acceptable. Cracks in the head are also acceptable provided they do not result in loss of head material.

h. Sprocket P/N 1560-UH1-753-1:

(1) Nicks, scratches, wear and pitting are acceptable provided they do not affect the operation of the chain.

(2) Cracks are unacceptable and cause for support rejection.

11-150. Repair — Control Tube and Quill — Tail Rotor (AVIM).

a. Dress splines or threads with fine India stone (C264) if nicks, burrs or scratches are visible.

b. Apply solid film lubricant (C162) on splines and threads at control screw end of control rod as follows:

(1) Mask off other areas.

(2) Apply **0.0001 TO 0.0002** inch film thickness of solid film lubricant (C162), on splines and threads.

(3) Cure at **375° F (190°C)** for **60** minutes in a recirculating type automatically controlled oven.

(4) Test film adhesion by applying strip of one-inch adhesive tape (C271) with firm finger pressure, then removing tape with one abrupt motion.

(5) No large particles or flakes should peel off with tape.

c. Replaced damaged cork plug in screw-thread end of control tube. Coat cork with wet shellac (C246) and press into place with outer face **0.30** inch deep in screw-thread end fitting.

d. Replace damaged cork plug in outer end of control nut. Coat cork with wet shellac (C246) and press into place with inner face **1.85** inches from inner end of control unit.

11-151. Replacement — Control Tube and Quill — Tail Rotor.

a. Replace seals and packings at reassembly.

b. Replace all parts that fail inspection requirements.

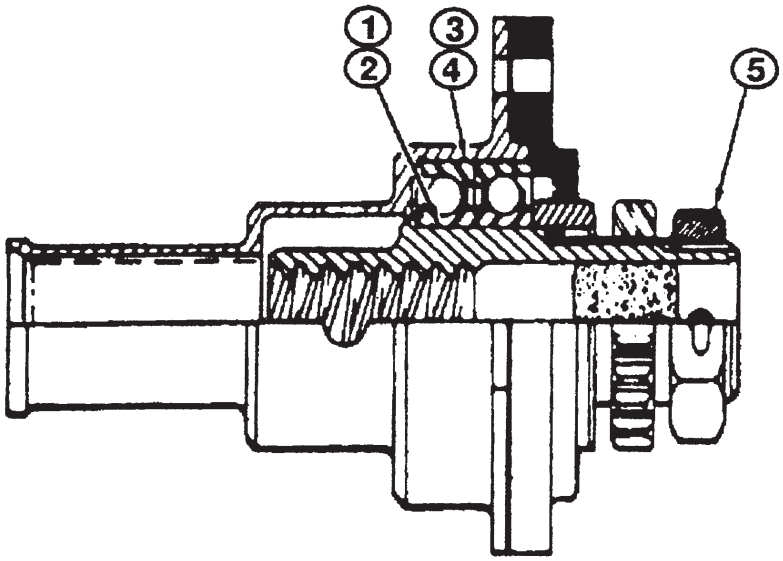

ITEM	NOMENCLATURE		MIN.	MAX	REPLACE
1	Control Nut-Bearing Seat	OD	0.9835	0.9847	0.9825
2	Duplex Bearing				
3	Duplex Bearing				
4	Quill Housing	ID	1.6535	1.6545	1.6555
5	Retaining Nut-Torque	In/Lb	100	300	

Figure 11-34. Control Quill — Limits Chart

Page 11-101.1/(11-101.2 blank) has been deleted

c. Replace guard, cover, or pan when cracked or damaged.

d. Replace control tube for faulty operation or visible defects such as cracks, bending and damaged threads or splines.

e. Replace control chain when faulty operation or visible indications of excessive wear occur. When chain is replaced, replace sprocket on control quill as outlined in step f.

f. Sprocket PN 1560-UH1-753-1. Nicks, scathes, wear and pitting are acceptable provided they do not affect operation of chain. Cracks are unacceptable and cause for sprocket rejection.

(1) Remove cotter pin (20) and retaining nut (19) while holding sprocket (18) carefully in padded jaws of suitable tool or vise.

(2) Remove and replace sprocket (18) without separating other parts.

(3) Reinstall retaining nut (19) on end of control nut (12). Torque 100 TO 300 inch-pounds and align cotter pin holes.

(4) Install cotter pin (20) with spread ends parallel to face of sprocket and bent flat against hex face of retaining nut (19).

11-152. Assembly - Control Tube and Quill -Tall Rotor.

WARNING

When installing Duplex Bearings, insure that the scribed lines on each bearing half form a "V' with the scribed marks aligned.

CAUTION

Prior to installing control nut, ensure that control tube threads fully engage control nut threads. No binding should occur.

a. Press duplex bearings (13, figure 11-33) back-to-back on control nut (12) using tool (T43).

b. Place packing (14) in recess between bearing seat and splines of control nut (12).

c. Place spacer (15) over packing against inner race of bearing (13).

d. Apply a small amount of sealing compound (C242) or compound, retaining (C79) around seal (16) before pressing into bearing retainer (17). Press seal (16), with lip inward, into bearing retainer (17) until flush with outer face of retainer plate, using tool (T43).

e. Place retainer assembly over spacer against outer race of bearing.

NOTE

If required, a washer (21) may be Installed to prevent contact and riding up of chain (6) on the spacer, PIN 204-010-766 (15) and/or to align cotter pin hole of retaining nut. Chain (6) must be pushed sideways on sprocket (18) as far as possible to check if It will contact the spacer, PIN 204-010-766 (15). See figure D-357, Appendix D, for manufacture data on washer (21).

f. Place sprocket (18) on splines of control nut (12) and against spacer (15).

g. Install retaining nut (19) while holding sprocket carefully in padded jaws of vise or other suitable tool. Torque nut 100 TO 300 inch-pounds with holes aligned for cotter pin (20) spread and bent against the hex face of retaining nut (19) parallel to sprocket face.

h. Place packing (11) on inner face of quill hosing (10) and assemble housing over bearing.

11-153. Installation - Control Tube and Quill - Tall Rotor.

a. Insert control tube (10, figure 11-32) through inner end of control quill (12) with splines meshed. Turn sprocket to engage quill control nut on threads of tube. Place packing (11) on quill.

b. Uncover port on right side of 90 degree gearbox (9). Insert control tube (10) carefully through rotor shaft and seat quill flanges over mounting studs.

c. Place housing pan (14) on studs and secure temporarily with nuts (18) and washers (17), and with screw (13) through bracket on lower comer into matching nutplate of vertical fin.

d. Check gap between flanges of quill housing and retainer. If gap is more that 0.025 but less than 0.040 inch, add one thin aluminum alloy washer between housing and retainer on each stud. If gap is more than 0.040 inch, add two thin aluminum washers in the same manner. Packing (11, figure 11-33) must be removed when checking this gap. After proper gap is established, install

packing (11, figure 11-33), bearing retainer (17), washers (17, figure 11-32), and nuts (18, figure 11-32). Apply sealant (C244) externally around joints at outer joints at quill housing (figure 11-32).

e. Install pitch change control head assembly (paragraph 5-97).

NOTE

Refer to Figure 16 for lubrication instructions.

f Install and connect control chain (5) (paragraph 11-157).The control chain should completely engage the sprocket. I the control chain rides up on the sprocket teeth, the sprocket may have excessive wear or, if new, may have been manufactured incorrectly. Replace sprocket as necessary.

g. Complete rigging by installing sprocket guard (4) on mounting studs, secure with nuts (18) and washers (17). Torque nuts 50 TO 70 inch-pounds.

h. Install housing cover (3) using two bolts (1), washers (2 and 7), nut (8). Lockwire (C155) bolts (1) together.

11-154. TAIL ROTOR CONTROL CHAIN (ROLLER TYPE) AND SPROCKET ASSEMBLY - MAINTENANCE PROCEDURES.

11-155. Deleted.

11-156. Deleted.

11-16.1. Inspection - Tall Rotor Control Chain Part Number 1560-UHI-752-1 (Roller Type).

a. Using a suitable light and ten power magnifying glass, inspect both sides of chain as follows:

(1) Nicks and scratches in the link plates up to 0.010 inch in depth are acceptable. No clean up is required.

(2) Wear and pitting of the bushings is acceptable provided it does not result in exposure of the pin or affect operation of the chain, i.e., binding or climbing on the sprocket

(3) Loose bushings, i.e., those free to turn in the link plates, are unacceptable and cause for chain rejection.

(4) Any crack in either the link plates or bushings is unacceptable and cause for chain rejection.

NOTE

The bushings are roll formed from fiat stock resulting in a lengthwise seam which may in some cases be misinterpreted as a crack. One such Indication per bushing is therefore considered normal and acceptable. It is also permissible for this seam to be open up to a maximum of 0.020 Inch.

(5) Wear of pin heads is acceptable provided sufficient material remains to ensure pin security, i.e., wear of overlapping area to a feather edge is acceptable. Cracks in the head are also acceptable provided they do not result in loss of head material.

b. Sprocket P/N 1560UH1-753-1.

(1) Nicks, scratches, wear. and pitting are acceptable provided they do not affect the operation of the chain.

(2) Cracks are unacceptable and cause for sprocket rejection.

11-157. Installation - Tail Rotor Control Chain Part Number 1560-UH-1-752-1 (Roller Type).

a. Bottom out control quill by turning clockwise to end of travel. Position sprocket, part number 1560-UH-1-753-1, on control quill splines with any convenient tooth of sprocket in line with upper chain guard mounting stud (figure 11-35).

NOTE

This sprocket position has been found to be the best for obtaining the sprocket movement limit called out in stop h. The sprocket could be removed to another position on the splines if necessary to meet the final adjustment.

b. Using tail rotor control chain to hold sprocket, hold sprocket near midposition (figure 11-35). Approximately 1 1/2 turns counterclockwise from full clockwise will position control quill near midposition. Install sprocket retaining nut. Torque sprocket retaining nut **100 TO 300** inch-pounds. Aligning cotter pin holes, install sprocket retaining nut, cotter pin with spread ends parallel to face of sprocket, and bend flat hex face to retaining nut.

NOTE

Fairleads part number 1560-UH-1-755-1 may require trimming to fit properly.

c. If removed install new fairleads part number 1560-UH-1-755-1 using previously removed attaching hardware. For ease of fairlead installation, remove control chain and insert retainer plate in slots of fairleads and press fairleads in holes of 90° gearbox mount.

Warning

Prior to connecting control chain to clevis of control cable, check for a figure "8" safety on two removable connecting links. On chains furnished without removable links, a safety is not required.

NOTE

If safety has been removed, refer to step d. If safety has not been removed, refer to step e.

d. Safety removable connecting links with lockwire (C155) (figure 11-36).

e. Connect control chain to clevis of control cable using previously removed attaching hardware (bolts, washers, and nuts). Nut should be finger tight, allowing clevis fitting to realign itself when deflected. Install cotter pins (figure 11-29).

NOTE

Nut and cotter pin to be on inboard side next to driveshaft.

f. With sprocket bottomed out in a clockwise position, left tail rotor control pedal held against stop, pull on bottom control cable so as to bottom out servo. Install control chain over sprocket and connect upper speed rig.

NOTE

Move sprocket counterclockwise only as necessary to engage chain.

g. Actuate full right and left tail rotor control pedal stopping and holding in left pedal position. Mark any convenient tooth of sprocket and cover pan with grease pencil.

h. Pull top chain along its normal downward line of travel until sprocket bottoms out. Sprocket should move **1 1/4 TO 2 1/4** teeth and bottom out.

NOTE

Relocate chain as necessary on sprocket to assure 1 1/4 TO 2 1/4 teeth movement of sprocket from bottom out. Verify by repeating steps g and h above.

NOTE

Check cable tension through lower elevator horn access cover. Speed rigs should be disconnected when adjusting cable tension, then reconnected and lockwired (C155) after adjustment is made.

i. Positioning pedals in neutral position, mark any convenient tooth of sprocket and cover pan so as to visually assure no movement in sprocket position. Set cable tension **40 TO 60** pounds. Remove grease marks.

j. Place and hold right tail rotor control pedal full forward. Mark sprocket opposite mark on cover pane.

NOTE

If sprocket will not rotate 2 to 3 teeth counterclockwise, refer to paragraph 11-110, Rigging Tailrotor System, and Figure 11-24 (view A).

k Pull lower chain to rotate sprocket 2 to 3 teeth counterclockwise. At this position, check that splines of pitch change slider and tail rotor shaft are securely engaged. Check for **40 TO 60** pounds cable tension, lock-wire turnbuckle.

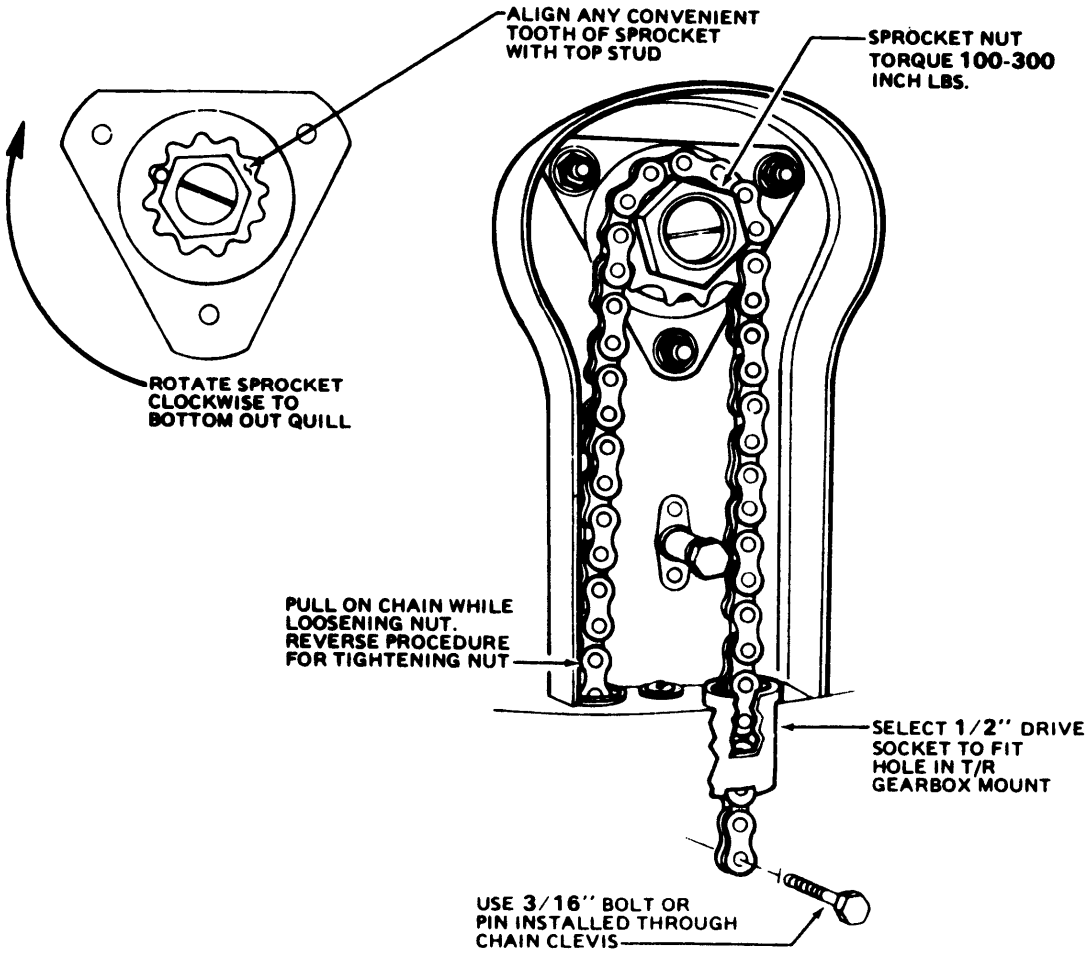

Figure 11-35 Sprocket Holding Procedure for Removal and Installation of Nut

NOTE

If hydraulic power is available, check full left pedal sprocket position with "Boost on" to be 1/4 to 1 1/4 teeth from bottom by observing relation of sprocket and index mark.

m. Disconnect speed rig to relieve tension on chain and remove nuts and washers from chain guard mounting studs.

NOTE

Ensure sprocket guard is centered so as not to bind on chain and sprocket throughout travel.

NOTE

Roughness or ratchiness in movement of roller chain is a normal phenomenon, when sprockets are new. It will become less noticeable as sprocket teeth wear into their normal pattern.

n. Position sprocket guard P/N 1560UH1-754-1 (4, figure 11-32) on mount-studs and secure with washers (17) and nuts (18). Torque nuts **50 to 70** inch-pounds. Reconnect speed rig.

o. Install housing cover (3) using two bolts (1) washers (2 and 7) and nut (8) Lockwire (C155) bolts (1) together. Apply sealant (C244) around control quill assembly (12) and housing pan (14).

p. Install lockwire (C155) on speed rig (figure 11-24).

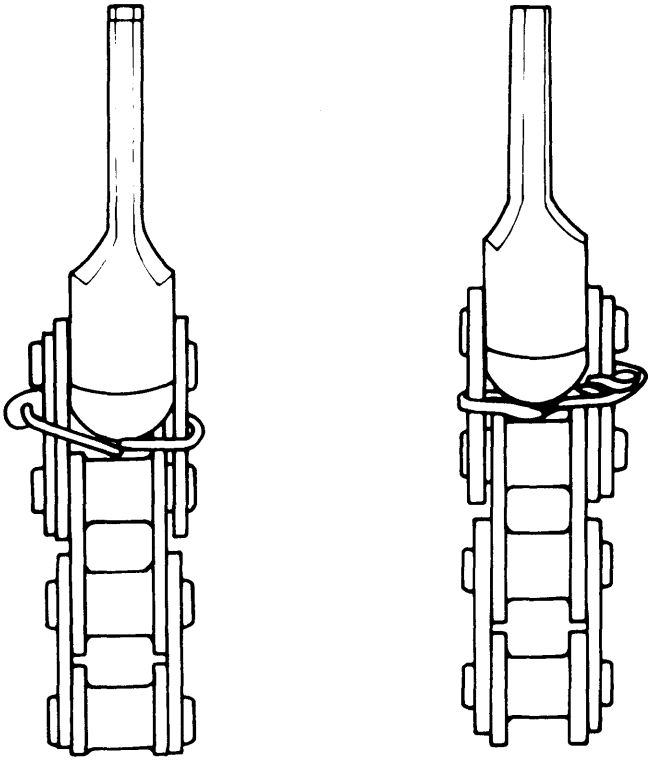

Figure 11-36. Chain Safety

q. Close and secure vertical fin driveshaft cover and elevator horn access cover.

r. Check tail rotor blade to boom clearance in accordance with paragraph 5-97.

s. Check pedal rigging in accordance with paragraph 11-110.

t. Perform maintenance test flight (TM 55-1520-242 MTF).

11-158. CONTROL TUBES – TAIL ROTOR CONTROL SYSTEM.

11-159. Description — Control Tubes - Tail Rotor Control System. Adjustable length control tubes and fixed length control tubes are used in the tail rotor control system. The fixed type are fitted with bonded and riveted clevis ends. The adjustable type have a threaded clevis end and locknut which secures clevis end.

11-160. Removal — Control Tubes — Tail Rotor Control System. a. Remove control tubes (5, figure 11-37) by removing cotter pin (1), nut (2 and 6), washers (3), and bolts (4 and 7) at each end of control tube. (See detail A — typical four places).

b. Disconnect control tube (9) by removing cotter pin (1), nut (10), washers (3), and bolt (8) at one end of control tube (detail B). Remove cotter pin (1), nut (16), washers (3), and bolt (15) at opposite end.

c. Disconnect control tube (20) by removing cotter pin (1), nut (19), washers (3) and bolt (22) (detail B). See figure 11-26 for removal of opposite end,

d. Disconnect control tube (12) by removing cotter pin (1), nut (11), washers (3), and bolt (13) at each end of control (detail B).

e. Disconnect control tube (28) by removing cotter pin (27), nut (26), washers (24), and bolt (29), (detail C). See figure 11-30 for removal at opposite end.

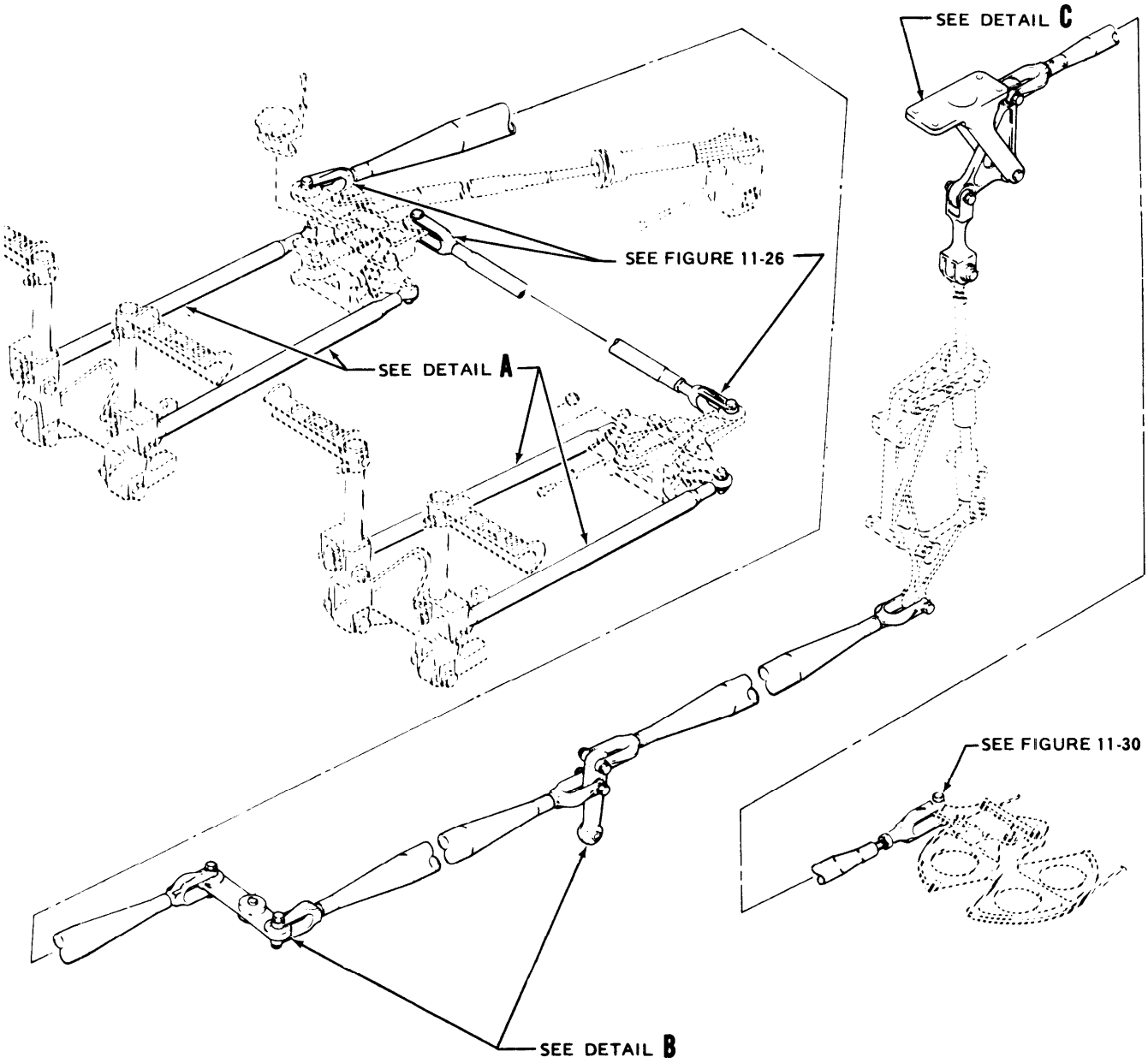

Figure 11-37. Tail Rotor Control System (Bellcranks, Levers, Supports, and Tubes) – Removal and Installation (Sheet 1 of 3)

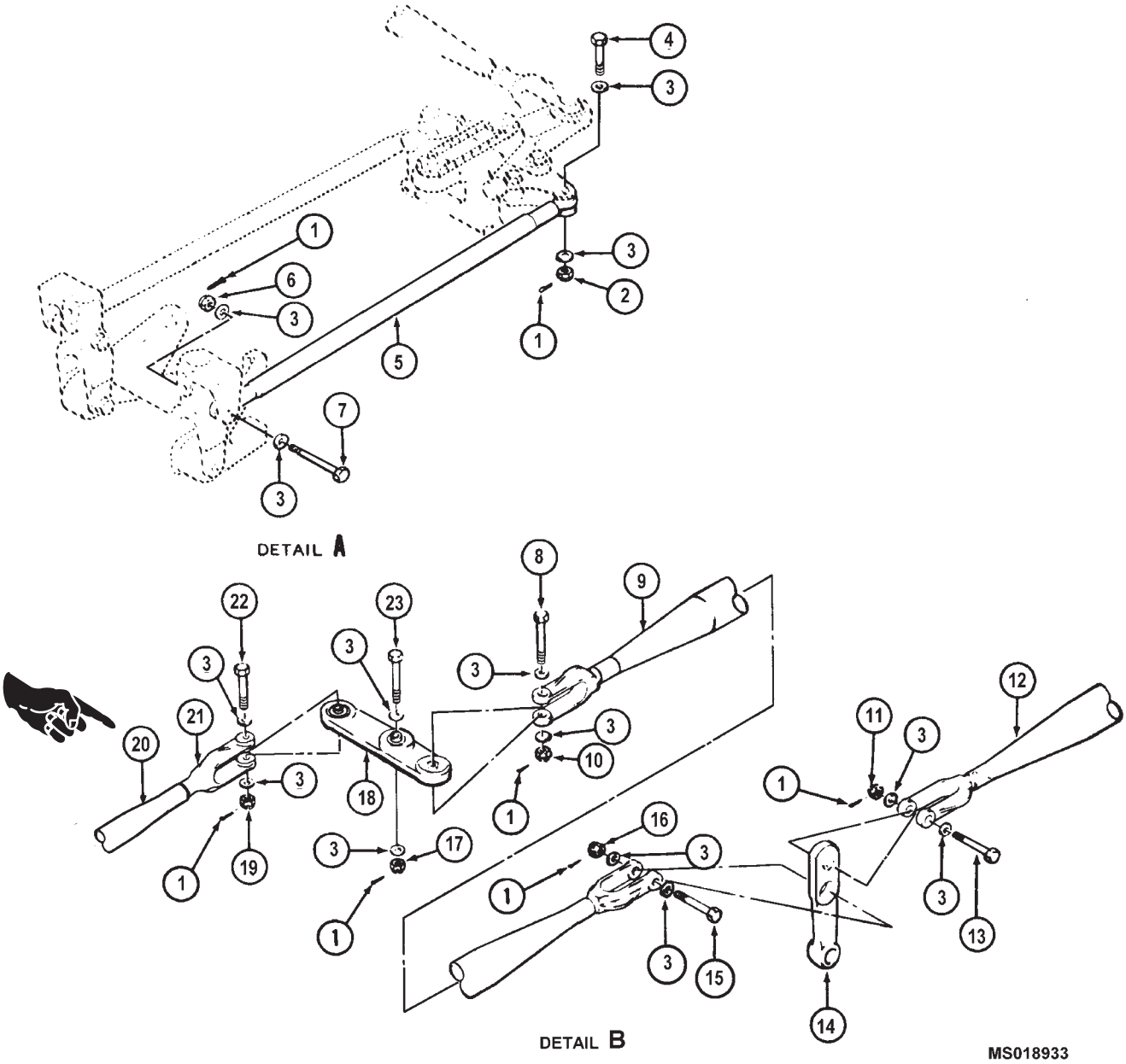

1.	Cotter Pin	9.	Control lube	17.	Nut
2.	Nut	10.	Nut	18.	Lever
3.	Washer	11.	Nut	19.	Nut
4.	Bolt	12.	Control tube	20.	Control tube
5.	Control tube	13.	Bolt	21.	Clevis
6.	Nut	14.	Lever	22.	Bolt
7.	Bolt	15.	Bolt	23.	Bolt
8.	Bolt	16.	Nut		

Figure 11-37. Tail Rotor Control System (Bellcranks, Levers, Supports, and Tubes) — Removal and Installation (Sheet 2 of 3)

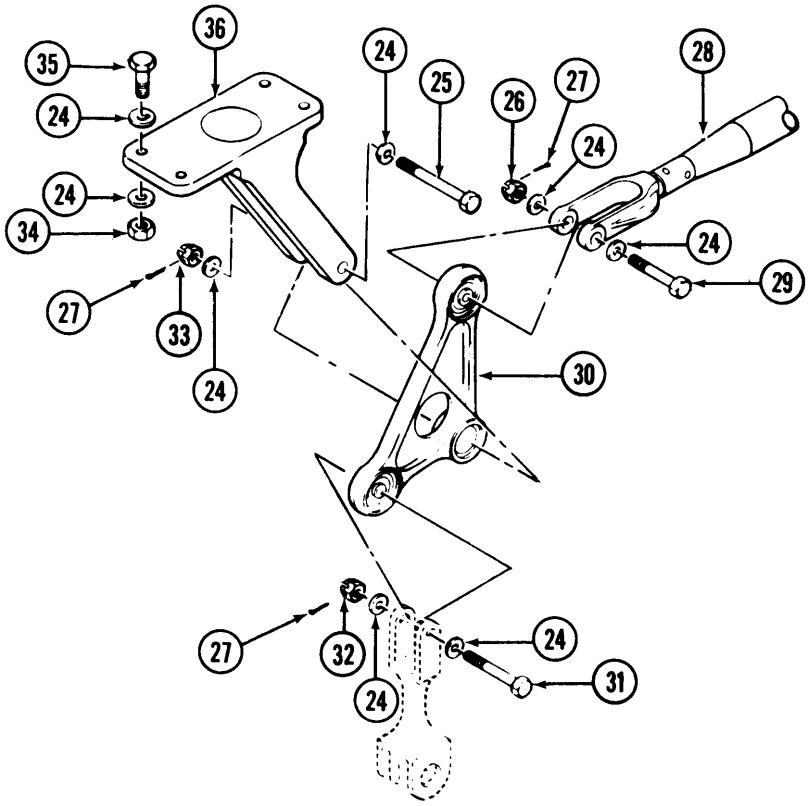

DETAIL C

24. Washer
25. Bolt
26. Nut
27. Cotter pin
28. Control tube
29. Bolt
30. Bellcrank
31. Bolt
32. Nut
33. Nut
34. Nut
35. Bolt
36. Support

Figure 11-37. Tail Rotor Control System (Bellcranks, Levers, Supports, and Tubes) — Removal and Installation (Sheet 3 of 3)

Premaintenance Requirements for Control Quadrant

Conditions	Requirements
Model	All
Part No. or Serial No.	All
Special Tools	None
Test Equipment	Eddy Current Inspection Unit
Support Equipment	None
Minimum Personnel Required	Two
Consumable Materials	None
Special Environmental Conditions	None
References	TM 1-1520-256-23

11-161. Inspection — Control Tubes — Tail Rotor Control System.

a. Inspect control tubes for corrosion, wear, and mechanical damage. See figure 11-38 for wear and damage limits. If a crack in the Tail Rotor Tubes is suspected, refer to TM 1-1520-256-23, Technical Manual Aviation Unit Maintenance (AVUM) and Aviation Intermediate Maintenance (AVIM) manual nondestructive inspection procedures for UH-1 helicopter series.

b. Inspect clevis end holes for wear and clevis end for looseness in tube.

11-162. Repair — Control Tubes — Tail Rotor Control System.

a. Polish out corrosion or mechanical damage to control tubes (repair areas only) in accordance with limits in figure 11-38.

b. Any damage to swage transition area or damage in repair areas that is in excess of limits is cause for replacement.

11-163. Installation — Control Tubes — Tail Rotor Control System.

a. Install control tube (28, figure 11-37) by adjusting to length of replaced tube and installing bolt (29), washers (24), nut (26), and cotter pin (27). Check adjustment of control tube at quadrant end on final rigging (figure 11-24, detail C).

b. Install control tube (9, figure 11-37) by installing bolt (8), washers (3), nut (10), and cotter pin (1) at forward end of control tube (detail B). Install bolt (15), washers (3), nut (16), and cotter pin (1) at opposite end.

c. Install control tube (20) by installing bolt (22), washers (3), nut (19), and cotter pin (1) (detail B).

d. Install control tube (12) by installing bolt (13), washers (3), nut (11), and cotter pin (1) at each end of control tube (detail B).

e. Install control tube (5) by installing bolts (4 and 7), washers (3), nut (2 and 6) and cotter pin (1) at each end of control tube (detail A — typical four places).

11-163.1 HYDRAULIC CYLINDER AND SUPPORT ASSEMBLY, TAIL ROTOR.

11-163.2 Description - Hydraulic Cylinder and Support Assembly, Tail Rotor A hydraulic power cylinder in tail rotor control linkage is vertically mounted in a support (figure 11-37.1) on Station 211 fuselage bulkhead, accessible through a door on right-hand side.

11-163.3 Adjustment - Hydraulic Cylinder and Support Assembly, Tail Rotor.

a. Adjust adapter (6, figure 11-37.2) 1.80 inches from centerline of hole to top surface of piston rod of power cylinder as shown and tighten nut (7) prior to installation of cylinder and support assembly to helicopter.

NOTE

1. Install aluminum washers only against magnesium.
2. Apply dissimilar metal separation tape (C278) to support assembly prior to installation.
3. Apply a light coat of unthinned zinc chromate primer (C312) to bolt prior to installation.

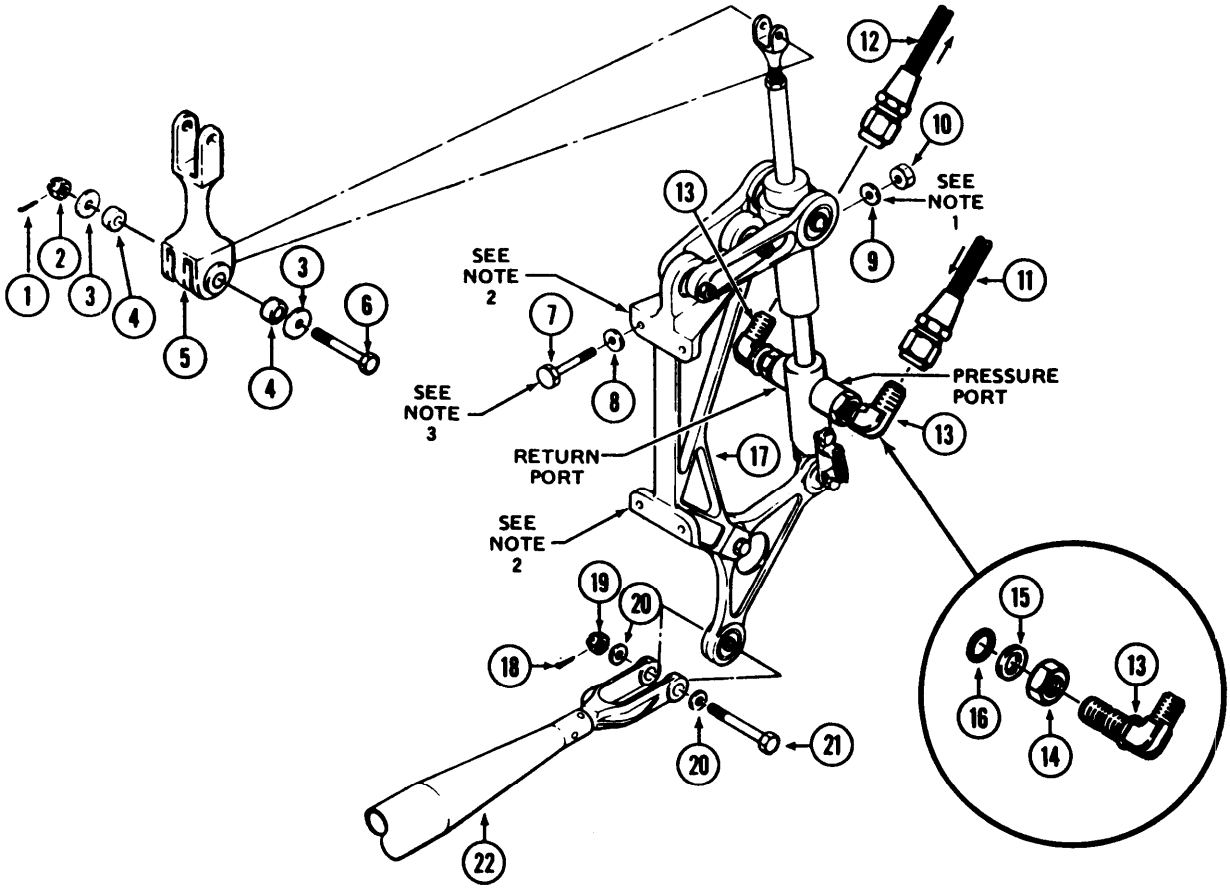

1. Cotter pin
2. Nut
3. Washers
4. Sleeves
5. Link assembly
6. Bolt
7. Bolt
8. Washer
9. Washer
10. Nut
11. Hose assembly
12. Hose assembly
13. Fitting
14. Nut
15. Ring
16. Preformed packing
17. Cylinder and support assembly
18. Cotter pin
19. Nut
20. Washers
21. Bolt
22. Control tube

Figure 11-37.1. Cylinder and Support Assembly, Tail Rotor — Removal and Installation

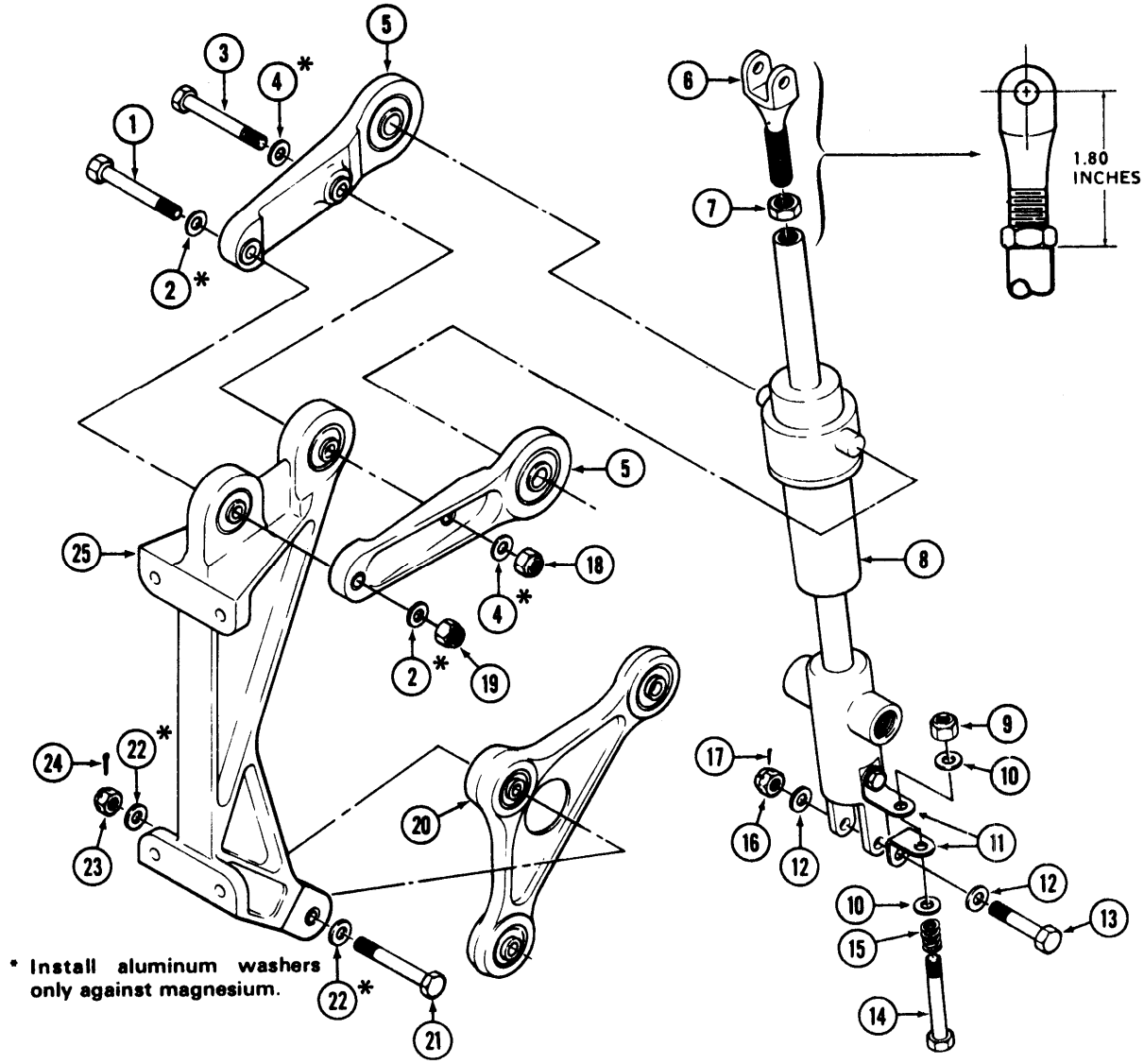

1. Bolt
*2. Washers
3. Bolt
*4. Washers
5. Arm assembly
6. Adapter
7. Nut
8. Power cylinder
9. Nut
10. Washers
11. Brackets
12. Washers
13. Bolt
14. Bolt
15. Spring
16. Nut
17. Cotter pin
18. Nut
19. Nut
20. Bellcrank assembly
21. Bolt
*22. Washers
23. Nut
24. Cotter pin
25. Support assembly

Figure 11-37.2. Cylinder and Support Assembly, Tail Rotor — Disassembled View

NOTE

After tail rotor control system has been rigged, balance spring tension shall be adjusted to prevent either control pedal from creeping forward or aft. Increasing spring tension will prevent left pedal from creeping forward. Decreasing spring tension will prevent left pedal from creeping aft.

b. Rig tail rotor control system (paragraph 11-109 or 11-110). Adjust spring (15, figure 11-37.2) tension by tightening or loosening nut (9). If motoring persists, after adjusting the balance spring tension, check the hydraulic hoses (11 and 12, figure 11-37.1) to ensure that there is ample slack to permit smooth operation of the power cylinder. Any tension on the power cylinder by the connecting hoses (11 and 12) can cause motoring.

Premaintenance Requirements for Hydraulic Cylinder and Support Assembly, Tail Rotor

Conditions	Requirements
Model	All
Part No. or Serial No.	All
Special Tools	None
Test Equipment	Magnetic Particle Method Eddy Current Inspection Unit
Support Equipment	None
Minimum Personnel Required	Two
Consumable Materials	None
Special Environmental Conditions	None
References	TM 1-1520-256-23

11-163.4 Inspection, Assembled — Hydraulic Cylinder and Support Assembly, Tail Rotor.

a. Check hydraulic cylinder for tightness or binding. Valve should be free to move on shaft. Be sure hose assemblies (11 or 12, figure 11-37.1) do not restrict valve movement.

b. Inspect hydraulic power cylinder for cleanliness, damage, freedom of movement and evidence of leaks. Allowable leakage for this cylinder is one drop per 25 cycles.

c. Inspect cylinder and support assembly (17) and attaching components for security.

d. Inspect piston rod of power cylinder for nicks, scratches and cracks. (AVIM). If a crack in the Piston Rod of the Power Cylinder is suspected, refer to TM 1-1520-256-23, Technical Manual Aviation Unit Maintenance (AVUM) and Aviation Intermediate Maintenance (AVIM) manual nondestructive inspection procedures for UH-1 helicopter series.

e. Inspect cylinder and support assembly (17) for proper installation.

f. Inspect arm assemblies (5, figure 11-37.2), bellcrank assembly (20) and support assembly (25) for corrosion damage, pitting or distortion, refer to table 11-3 (figure 11-37.2). If a crack in the ARM Assemblies, Bellcrank Assembly, or Support Assembly is suspected, refer to TM 1-1520-256-23, Technical Manual Aviation Unit Maintenance (AVUM) and Aviation Intermediate Maintenance (AVIM) manual nondestructive inspection procedures for UH-1 helicopter series.

g. Inspect hydraulic fittings (13, figure 11-37.1) and nuts (14) for corrosion, cracks and thread damage.

11-163.5 Removal — Hydraulic Cylinder Assembly, Tail Rotor.

a. Open access door (36, figure 2-18).

NOTE

A small amount of fluid seepage will occur when disconnecting hose. Ensure protective covers are installed on all open ports to prevent entry of foreign material.

b. Place a suitable container under hose assemblies (11 and 12, figure 11-37.1), disconnect hoses from fittings (13). Cap all fittings and hose connectors.

c. Remove cotter pin (1), nut (2), washers (3), sleeves (4) and bolt (6) attaching link assembly (5) to adapter of power cylinder. Keep attaching parts with link assembly.

d. Remove cotter pin (18), nut (19), washers (20) and bolt (21) from control tube (22) and disconnect control tube from bellcrank.

e. Remove cotter pin (24), nut (23), washer (22) and bolt (21) from support assembly (25, figure 11-37.2).

f. Remove nuts (18), washers (4) and bolt (3) from arm assembly (5).

g. Remove nut (19), washer (2) and bolt (1) from arm assembly (5). Remove arm assemblies (5) and remove hydraulic cylinder (8) with bellcrank (20).

11-163.6. Disassembly — Hydraulic Cylinder Assembly.

a. Place cylinder on clean work bench and remove cotter pin (17), nut (16), washers (12), and bolt (13) from power cylinder (8) and bracket (11).

b. Remove nut (9), washers (10), spring (15) and bolt (14) from brackets (11).

c. Remove fittings (13, figure 11-37.1), packings (16), rings (15) and two nuts (14) from cylinder assembly.

11-163.7 Inspection Disassembled Hydraulic Cylinder Assembly, Tail Rotor (AVIM).

a. Power Cylinder and Adjuster (AVIM). Inspect power cylinder (8, figure 11-37.2) and adapter (6) in accordance with table 11-3, paragraph 11-163.4 and as follows:

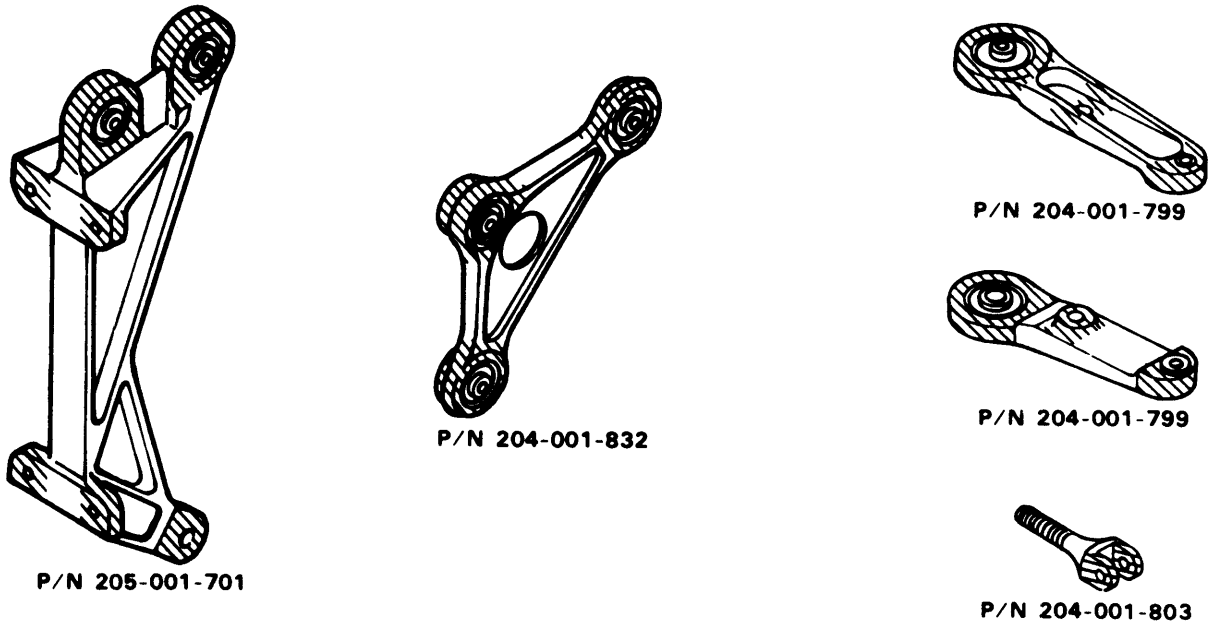

TYPE OF DAMAGE	DAMAGE AREA REPAIR ZONES	
MECHANICAL	0.010 INCH MAX. DEPTH	0.020 INCH MAX. DEPTH
CORROSION	0.005 INCH MAX, DEPTH	0.010 INCH MAX. DEPTH
MAXIMUM AREA PER FULL DEPTH REPAIR	0.10 SQUARE INCH	NOT CRITICAL
MAXIMUM NUMBER OF REPAIRS	TWO PER ZONE	NOT CRITICAL
EDGE CHAMFER	0.040 INCH MAX,	0.080 INCH MAX.
BORE HOUSING AND BUSHING		
BORE DAMAGE:	0.002 INCH FOR ONE-FOURTH CIRCUMFERENCE	
CRACKS:	NO CRACKS ALLOWED	

Figure 11-37.3. Cylinder and Support Assembly, Tail Rotor – Damage Limits (Sheet 1 of 2)

NOTE: The allowable in-service bearing wear limits prior to replacement are as follows:

BEARING DESIGNATION		BEARING WEAR LIMITS
MILITARY STANDARD PART NUMBER	**MANUFACTURE PART NUMBER**	**MAXIMUM RADIAL PLAY**
MS27643-4	DSP4, DSRP4	0.006 INCH
MS27643-4	DW4, MDW4, DW4K	0.005 INCH
MS27641-8	KP8A	0.006 INCH
N/A	J11672-3	0.005 INCH

Figure 11-37.3. Cylinder and Support Assembly, Tail Rotor — Damage Limits (Sheet 2 of 2)

(1) Inspect power cylinder (8) for cleanliness, damage, freedom of movement and evidence of leaks.

(2) Inspect adapter (6) for nicks and scratches (figure 11-37.2).

(3) Inspect for hole elongation to brackets (11, figure 11-37.2), adapter (6) and lower end of power cylinder (8).

(4) Inspect piston rod of power cylinder (8) and adapter (6) for stripped or crossed threads.

(5) Inspect spring (15) for corrosion or deformity.

(6) (AVIM) Inspect adapter (6) for cracks using magnetic particle method per MIL-I-6868 and TM 1-1500-204-23 series. If a crack in the Power Cylinder Adapter is suspected, refer to TM 1-1520-256-23, Technical Manual Aviation Unit Maintenance (AVUM) and Aviation Intermediate Maintenance (AVIM) manual nondestructive inspection procedures for UH-1 helicopter series.

(7) Inspect all bearings for maximum radial and axial play in accordance with limits in figure 11-44 (AVIM).

b. Support Assembly. (AVIM).

(1) Remove nuts (10), washers (8 and 9), and bolts (7) attaching cylinder and support assembly (17) to bulkhead and remove support assembly.

(1.1) Inspect support assembly (25, figure 11-37.2), left and right arm assembly (5) and bellcrank assembly (20), refer to table 11-3 (figure 11-37.3). If a crack in the Tail Rotor Support Assembly is suspected, refer to TM 1-1520-256-23, Technical Manual Aviation Unit Maintenance (AVUM) and Aviation Intermediate Maintenance (AVIM) manual nondestructive inspection procedures for UH-1 helicopter series.

(2) Inspect support assembly (25, figure 11-37.2), two arm assemblies (5), and bellcrank assembly (20) using fluorescent penetrant method per MIL-I-6866 and TM 1-1500-204-23 series.

c. Attaching Hardware. Inspect attaching hardware of hydraulic cylinder assembly as follows:

(1) Inspect for loose or missing hardware.

(2) Inspect hardware for corrosion.

(3) (AVIM) Inspect hardware for cracks using magnetic particle method per MIL-I-6868 and TM 1-1500-204-23 series. No cracks allowed.

(4) Inspect hardware for security.

(5) Inspect washers for elongated holes.

(6) Inspect all bolts and nuts for thread damage.

Table 11-3. Inspection Requirements for Cylinder and Support Assembly, Tall Rotor

FIGURE 11- AND INDEX NO	NOMENCLATURE	METOD OF INSPECTION			TYPICAL DEFECTS	REFERENCE PARAGRAPH		REMARKS
		VISUAL	MAGNETIC PARTICLE	PENETRANT		INSPECTION	REPAIR	
37.1 11	Hose Assembly	X			Cracks, corrosion, flayed wire mesh, deterioration, deformed.	11-16.4	Refer to TM 1-100-2204-23-2 Chapter 4.	
37.1 12	Hose Assembly	X			Corrosion, cracks, frayed, wire mesh, deterioration, deformed.	11163.4	Refer to TM 1-1600-20423-2 Comport 4.	
37.1 13	Fitting	X			Corrosion, cracks and thread age	11-163.4	Replace If damaged.	
37.1 14	Nut				Corrosion, cracks and thread damage	11-163.4	Replace f damaged.	
37.2 6	Arm Assembly	X			Corrosion, nicks, scratch, cracks, deformed and damaged bearing	11-1634 and figure 11-37.3	11-163.S and figure 1117.3	
37.2 6	Adapter	X	X		Nicks, scratches", cracks, corrosion and thread damage.	11.163.4 and figure 1137.3	11-163.8 and figure 11-37.3	
37.2 7	Nut	X	X		Corrosion, cracks and thread damage.	11-163.4	11-163.8	
37.2 8	Power Cylinder	X			Nicks, scratches, cracks, leaks, binding, corrosion, deformed and thread damage, cleanliness.	11-163.8	11-163.7	
37.2 20	Bellcrank Assembly	X			Nicks, scratches, cracks, corrosion and damaged bearings.	11-163.4 and figure 11-37.3	11-183.0 and figure 11-37.3	
37.2 11	Bracket	X			Cracks, corrosion, nicks, deep scratched and bent	11-163.7	11-163.8	
37.216	Spring	X			Corrosion, deformed damaged.	11-163.7	Replace i	
37.2 25	Support Assembly	X			Cracks, corrosion, nick, scratches, and damaged bearings.	11-1 figure 11-37.3	11-138 3and figure 11-37.3	

* Magnetic paretic inspect In accordant with MIL4-149 and TM 1-1500-204-23-7 Chapter 4.
**Fluorescent penitent Inspect In accordance with MIL44866 and TM 1-1500-204-23-7 Chapter 3.

11-163.8. Repair — Hydraulic Cylinder and Support Assembly, Tail Rotor (AVIM).

Premaintenance requirements for repair of tail rotor cylinder and support assembly (AVIM)

Conditions	Requirements
Model	All
Part No. or Serial No.	205-001-700-3, -5, and -7
Special Tools	None
Test Equipment	None
Support Equipment	
Minimum Personnel Required	One
Consumable Materials	(C62), C234), (C312), (C278)
Special Environmental Conditions	Dust Free/Well Ventilated Area

a. Power Cylinder Assembly (AVIM). Repair power cylinder assembly (8, figure 11-37.2) as follows:

(1) Any cracks to components of power cylinder (8) require replacement of part.

(2) Replace any bearing in support assembly (25), arm assembly (5) or bellcrank assembly (20) that is damaged or exceeds inspection limits outlined in above paragraph 11-163.7, step a (7).

(3) For bearing replacement procedures. (paragraph 11-187 and figure 11-44).

(4) Replace packings (16, figure 11-37.1) when removed or leaking.

b. Support Assembly (AVIM). Damages that do not exceed the maximum limits outlined in figure 11-37.3 may be repaired by polishing the damaged area with 600 grit sandpaper (C234). Treat repaired area with chemical film material (C62) followed with a light touchup of zinc chromate primer (C312).

c. Attaching Hardware.

(1) Replace any missing hardware.

(2) Tighten hardware when loose.

(3) Any cracks or corrosion requires replacement of part.

(4) Elongated holes in washers require replacement of part.

(5) Replace tape (C278) to mounting pads of support assembly (25) when missing or torn.

11.163.9. Installation — Support Assembly, Tail Rotor.

CAUTION

Install aluminum washers 11-37.1) against support (25, figure 11-37.2).

NOTE

Prior to installation of support assembly, insure that tape (C278) on mounting pads of support assembly (25, figure 11-37.2) is not torn or missing. Tape will extend past edges of mounting pads 1/4 inch. Bolts 7, figure 11-37.1) will have a light application of unthinned primer (C312) or primer (C206) applied prior to installation.

a. Position support assembly (17, figure 11-37.1) to bulkhead and install bolts (7) (with a light coat of unthinned primer (C312) or primer (C206), washers (9) and nuts (10).

Install bolt (1), washers (2) and nut (19) to assemblies (5).

CAUTION

Install aluminum washers (22) against support assembly (25).

c. Position bellcrank assembly (20) to support assembly (25) and install bolt (21), washers (22) and nut (23). Secure nut (23) with cotter pin (24).

d. Place washer (12) and bracket (11) on bolt (13). Position bellcrank (20) to power cylinder (8) and install bolt (13), washer (12) and nut (16). Secure nut (16) with cotter pin (17).

e. Place spring (15) and washer (10) on bolt (14) and install bolt through two brackets (11). install washer (10) and nut (9) to bolt (14).

f. Install nut (7) to adapter (6), thread adaptor into piston rod of power cylinder (8) and (adjust adapter (6) **1.80** inches as shown. Tighten nut (7) against piston rod.

CAUTION

When hydraulic cylinder and support assembly is not scheduled for immediate installation to helicoptor, precautionary measures must be exercised at all times to keep component clean and to prevent corrosion. Prepare as follows:

g. Wrap hydraulic cylinder and support assembly (17, figure 11-37.1) in barrier material (C115), and secure with tape (C279).

11-163.10. Installation — Hydraulic Cylinder, Tail Rotor.

CAUTION

When hydraulic cylinder or support assembly is not scheduled for immediate installation to helicopter, precautionary measures must be exercised at all times to keep component clean and to prevent corrosion. Prepare as follows: Wrap hydraulic cylinder and support assembly (17, figure 11-37.1) in barrier material (C98), and secure with tape (C279).

CAUTION

Install aluminum wshers (22) against support assembly (25).

NOTE

For assembly and installation of hydraulic cylinder proceed as follows:

a. Position bellcrank assembly (20) to support assembly (25) and install bolt (21), washers (22) and nut (23) with cotter pin (24).

b. Install nut (7) to adapter (6). Thread adapter into piston rod of power cylinder (8) and adjust adapter (6) 1.80 inches as shown. Tighten nut (7) against piston rod.

CAUTION

Aluminum washers (2 and 4, figure 11-37.2) will be installed only adjacent to arm assemblies (5).

c. Position arm assemblies (5) to mounting bosses of power cylinder (8) and upper bearings of support assembly (25) and install bolt (3), washers (4) and nut (18),

d. Install bolt (1), washers (2), and nut (19) to arm assemblies (5).

e. Place washer (12) and bracket (11) on bolt (13), position bellcrank (20) to power cylinder (8) and install bolt (13), washer (12) and nut (16). Secure nut (16) with cotter pin (17).

f. Place spring (15) and washer (10) on bolt (14) and install bolt through two brackets (11). Install washer (10 and nut (9) to bolt (14).

g. Insert adapter (6, figure 11-37.2) into link assembly (5, figure 11-37.1) and install bolts (6), washers (3), sleeves (4), and nuts (2). Secure nut (2) with cotter pin (1).

NOTE

A small amount of fluid seepage may occur when removing protective dust covers from power cylinder (8, figure 11-37.2) which will require placing a rag or small container under pressure and return ports to catch seepage.

h. Remove protective covers from pressure and return ports of power cylinder (8).

i. The following installation procedures for fitting (13, figure 11-37.1) are typical for both pressure and return ports of power cylinder.

(1) Install nut (14), (backup) ring (15) and packing (16) on fitting (13) and thread fittings into pressure and return ports of power cylinder.

(2) Position fittings (13), approximately as shown and secure nut (14).

j. Install hose assemblies (11 and 12) to fittings (13). Ensure that hose assemblies are not twisted, kinked, and do not foul.

k. Position control tube (22) to bellcrank (20, figure 11-37.2) and install bolt (21, figure 11-37.1), washers (20) and nut (19). Secure nut (19) with cotter pin (18).

l. Remove rag or container from under power cylinder.

m. Move pedals to full left and full right and check hose assemblies (11 and 12) during both positions for fouling.

n. Service and bleed hydraulic system. (paragraphs 7-6 and 7-8).

o. Check rigging of tail rotor flight control system. (paragraph 11-109 or 11-110).

p. Close access door (36, figure 2-18).

q. Perform operational check of tail rotor flight control system (paragraph 7-3).

11-164. BELLCRANKS, LEVERS, AND SUPPORTS — TAIL ROTOR CONTROL SYSTEM.

11-165. Description — Bellcranks, Levers and Supports — Tail Rotor Control System. Various bellcranks, levers and supports are incorporated in the tail rotor control system. The supports are airframe mounted and provide a pivot mount for levers and bellcranks.

11-166. Removal — Bellcranks, Levers and Supports — Tail Rotor Control System.

a. Remove lever (18, figure 11-37, detail B) as follows:

(1) Remove cotter pin (1), nut (10), two washers (3), and bolt (8).

(2) Remove cotter pin (1), nut (17), two washers (3), and bolt (23).

(3) Remove cotter pin (1), nut (19), two washers (3), and bolt (22). Remove lever (18).

b. Remove lever (14) as follows:

(1) Remove cotter pin (1), nut (16), bolt (15), and two washers (3).

(2) Remove cotter pin (1), nut (11), bolt (13), and two washers (3).

(3) Remove cotter pin, nut, washers, and bolt at lower end of lever. Remove lever (14).

c. Remove bellcrank (30, figure 11-37, detail C) as follows:

(1) Remove cotter pin (27), nut (32), washers (24), and bolt (31).

(2) Remove cotter pin (27), nut (26), washers (24), and bolt (29).

(3) Remove cotter pin (27), nut (33), washers (24), and bolt (25). Remove bellcrank (30).

d. Remove support (36, detail C) as follows:

(1) Remove four bolts (35) and eight washers (24), and nuts (34). Remove support.

(2) If present, remove tapered shim note orientation, and tie to support using bolt holes.

Premaintenance Requirements for Bellcranks, Levers, and Supports—Tail Rotor Control System

Conditions	Requirements
Model	All
Part No. or Serial No.	All
Special Tools	None
Test Equipment	Eddy Current Inspection Unit
Support Equipment	None
Minimum Personnel Required	Two
Consumable Materials	None
Special Environmental Conditions	None
References	TM 1-1520-256-23

11-167. Inspection — Bellcranks, Levers and Supports — Tail Rotor Control System.

a. Inspect bellcranks, levers and supports for loose bearings. Refer to paragraph 11-185 for bearing limits.

b. Inspect bellcranks and levers for corrosion and mechanical damage. See figure 11-39 for inspection limits. If a crack in the Bellcranks or Levers of the Tail Rotor Control System is suspected, refer to TM 1-1520-256-23, Technical Manual Aviation Unit Maintenance (AVUM) and Aviation Intermediate Maintenance (AVIM) manual nondestructive inspection procedures for UH-1 helicopter series.

11-168. Repair — Bellcranks, Levers and Supports — Tail Rotor Control System (AVIM).

a. Replace loose or damaged bearings in bellcranks, levers and supports. Refer to paragraph 11-185 for bearing replacement.

b. Remove minor surface corrosion or repair damage areas using fine grit sandpaper (C235). Observe limits in figure 11-39.

(1) Treat repaired areas with chemical film (C62).

(2) Paint repaired area using zinc chromate primer (C312).

11-169. Installation — Bellcranks, Levers and Supports — Tail Rotor Control System.

a. Install lever (18, figure 11-37, detail B) as follows:

(1) Secure lever to airframe mount using two washers (3), bolt (23), and nut (17). Install cotter pin (1).

(2) Connect lever (18) to control tube clevis (21) using two washers (3), bolt (22), and nut (19). Install cotter pin (1).

(3) Connect opposite end of lever to control tube (9) using two washers (3), bolt (8), and nut (10). Install cotter pin (1).

b. Install lever (14) as follows:

(1) Position lever (14) to airframe mounting bracket. Secure using bolt, washers, nut, and cotter pin.

(2) Secure control tube (9) to center of lever using bolt (15), two washers (3), and nut (16). Install cotter pin (1).

(3) Secure control tube (12) to top end of lever (14) using bolt (13), two washers (3), and nut (11). Install cotter pin (1).

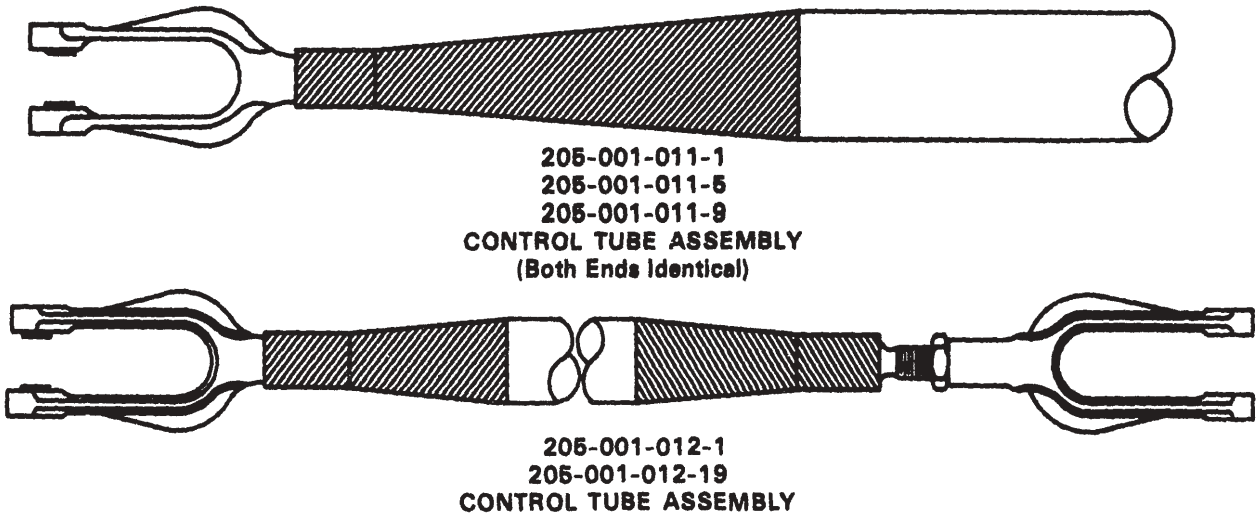

NOTES:

1. Maximum mechanical or corrosion damage allowed is 0.005 inch after clean-up. This applies to all tube assemblies.

2. No damage in shaded area.

3. No cracks allowed.

205001-1044

Figure 11-38. Wear and Damage Limits (Control Tubes) Tail Rotor Controls

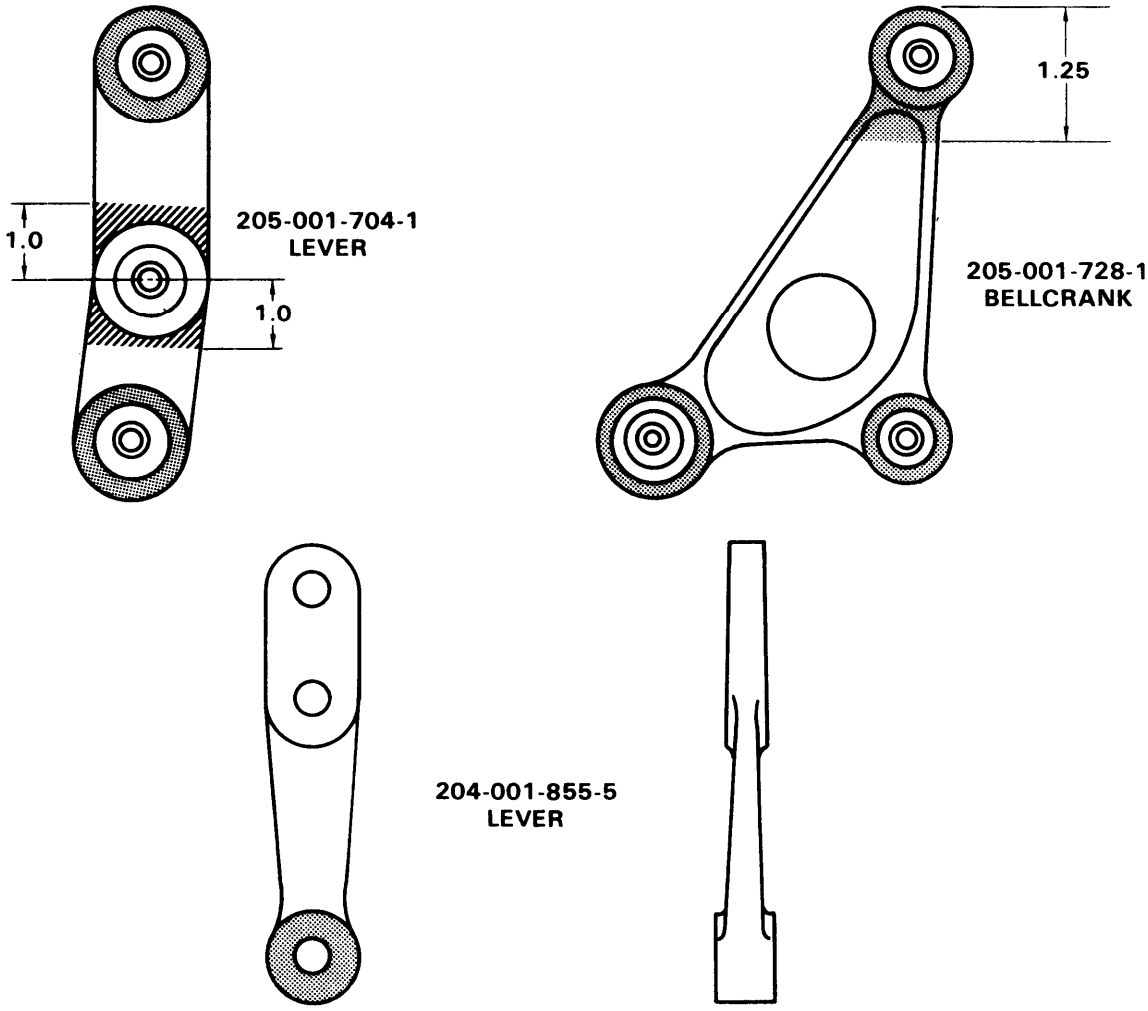

TYPE OF DAMAGE	DAMAGE AREA REPAIR SYMBOLS		
MECHANICAL DAMAGE (AFTER CLEAN-UP)	0.015 IN.	0.010 IN.	0.005 IN.
CORROSION DAMAGE (BEFORE CLEAN-UP)	0.0075 IN.	0.005 IN.	0.0025 IN.
(AFTER CLEAN-UP)	0.015 IN.	0.010 IN.	0.005 IN.
MAXIMUM AREA PER FULL DEPTH REPAIR	1 IN. SQ	0.10 IN. SQ.	0.10 IN. SQ.
NUMBER OF REPAIRS	ONE PER AREA	ONE PER AREA	ONE PER AREA
EDGE CHAMFER	0.05 BY 0.05	0.04 BY 0.04	
BORE DAMAGE	0.002 INCH FOR ONE-FOURTH CIRCUMFERENCE		
NO CRACKS ALLOWED			

ALL DIMENSIONS IN INCHES UNLESS OTHERWISE SPECIFIED

Figure 11-39. Wear and Damage Limits (Bellcranks, Levers and Supports) — Tail Rotor Control System

(4) At full left pedal, without hydraulic power, check that sprocket is 1 1/4 to 2 1/4 teeth from bottom position as shown by reference mark.

NOTE

When there is a slight inconsistency in the engine deck surface, which prevents alignment of the support assembly, a 0.024 Inch (maximum) tapered shim may be placed on the appropriate side of the support base.

c. Install support (36), (figure 11-37, detail C) using four bolts (35), eight washers (24) and four nuts (34).

d. Install bellcrank (30) as follows:

(1) Secure bellcrank to support using bolt (25), washers (24), and nut (33). Install cotter pin (27).

(2) Secure bellcrank to control tube (28) using bolt (29), washers (24), and nut (26). Install cotter pin (27).

(3) Secure bellcrank to link using bolt (31), washers (24), and nut (32). Install cotter pin (27).

11-170. ELEVATOR CONTROL SYSTEM.

11-171. Description - Elevator Control System. The synchronized elevator is located near the aft end of the tail boom and is connected by control tubes, bellcranks and mechanical linkage to the fore and aft cyclic control system. Fore and aft movement of the cyclic control stick produces change in the synchronized elevator attitude, thus increasing controllability of the helicopter (figure 11-40).

11-172. Rigging - Elevator Control System.

Premaintenance requirements for rigging of elevator control system

Conditions	Requirements
Model	All
Part No. or Serial No.	All
Special Tools	(T32)
Test Equipment	None
Support Equipment	Maintenance and
Work Stands	

Premaintenance requirements for rigging of elevator control system (cont.)

Conditions	Requirements
Minimum Personnel Required	Two
Consumable Materials	(C231, C278, C312)
Special Environmental Conditions	None

NOTE

The elevator control system cannot be properly rigged unless the cyclic control system is rigged. Refer to paragraph 11- 55.

a. Accomplish rigging after installing all bellcranks and nonadjustable control tubes (1, 7, and 11, figure 11-40).

b. Install rigging fixture (C32) on copilots cyclic control stick.

NOTE

Cyclic controls below servo valves of hydraulic cylinder assemblies must not move while bottoming valves.

c. With cyclic cylinder control valves in up position (figure 11-40, view E) and idler arm (4) parallel to longitudinal axis view A adjust tube (3) to fit and connect. Remove rigging fixture and move cyclic control stick full forward and check clearance of tube (3) with transmission fifth mount support beam. Move cyclic stick full aft and check clearance of tube (5) with forward bulkhead structure of cargo hook hole. Minimum allowable clearance is 0.10 inch in both places with pilots cyclic stick held in full forward and full aft position. Reinstall rigging fixture.

d. Maintain position of idler arm. Position bellcrank (8) so that center of bolt head is 2.60 inches from bulkhead as illustrated. (See view, B). Adjust tube (5) to fit and connect.

e Check that tube (13) is disconnected from elevator horn assembly (14).

f. Set right elevator so that chord line passes through rigging rivet ’P" for maximum elevator nose-down position. (See view C.) Adjust tube (13) to minimum length that will reach bellcrank (12) and connect. Tube will be in line with output arm and pivot of bellcrank (view D).

g. Remove rigging fixture (T32) from copilots cyclic stick. Place and hold pilots cyclic stick full forward.

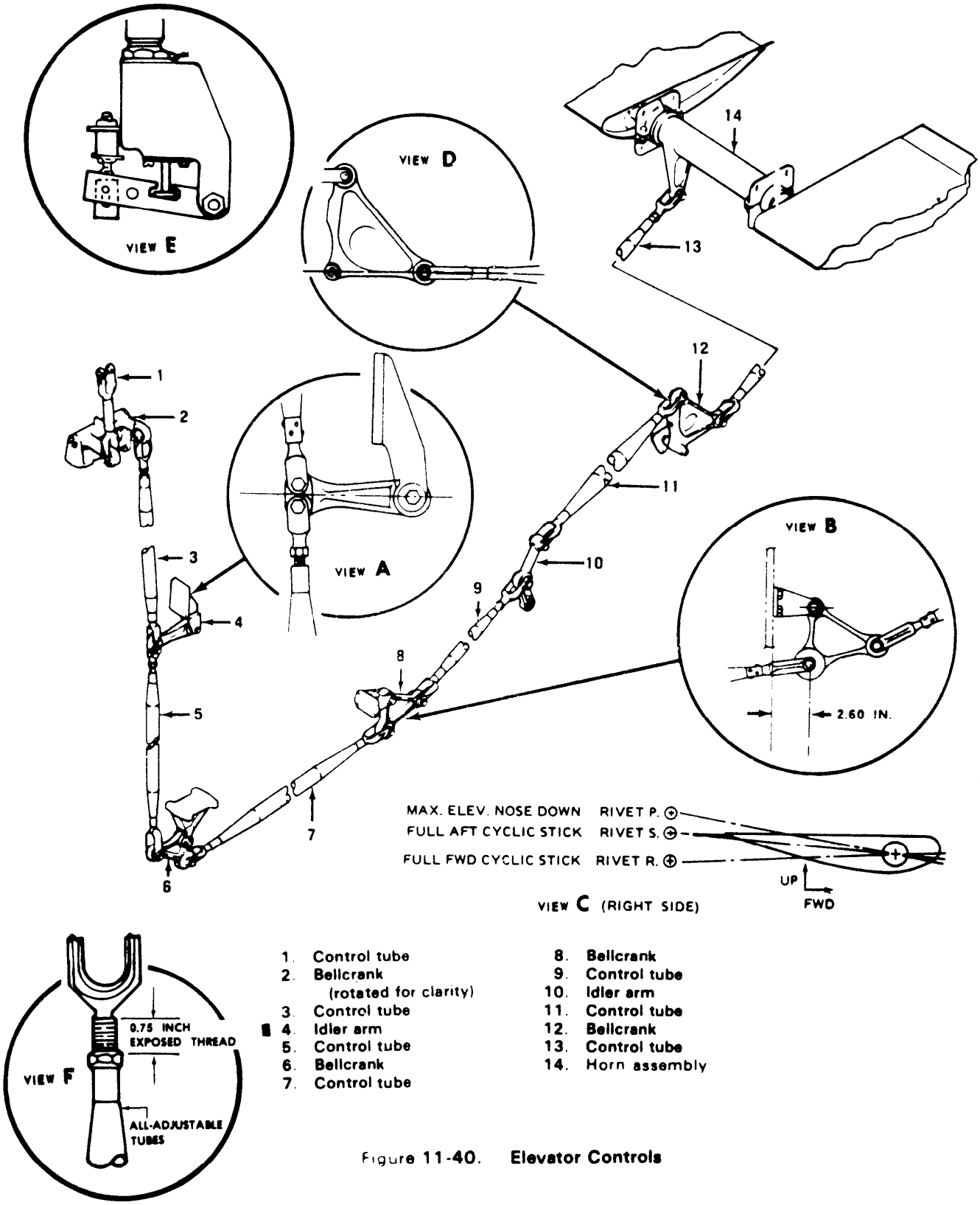

1. Control tube
2. Bellcrank (rotated for clarity)
3. Control tube
4. Idler arm
5. Control tube
6. Bellcrank
7. Control tube
8. Bellcrank
9. Control tube
10. Idler arm
11. Control tube
12. Bellcrank
13. Control tube
14. Horn assembly

Figure 11-40. Elevator Controls

Figure 11-40. Elevator Controls

h. Set right elevator chord line **0.50 TO 0.75** inch below rivet "R" for full forward cyclic stick position (view C). Aft arm of bellcrank (12) must be above horizontal. With valves centered in both cyclic cylinders, adjust tube (9) to meet these conditions with stick forward and connect.

i. Place and hold pilots cyclic full aft. Check right elevator chord line (upper surface) to pass through rivet "S" with **±0.400** inch (view C).

j. Check system for freedom of operation and full travel.

NOTE

Final adjustments made in paragraph 11-172k may change or make initial adjustments out of tolerance that were made in paragraph 11-172h and i.

k. Final rigging of the elevator must be accomplished with boost on as follows:

After the elevator system has been completely rigged boost off, place the pilot's cyclic stick in extreme forward position and adjust only tube (9) to align the chord line of the elevator on rivet "R". Each time tube (9) is adjusted, check aft arm of bellcrank (12, view D) for above horizontal position.

11-173. CONTROL TUBES — ELEVATOR CONTROL SYSTEM.

11-174. Description — Control Tubes — Elevator Control System. Control tubes (adjustable and nonadjustable) are used throughout the elevator control system. The tubes are connected to bellcranks, levers and supports with standard hardware.

11-175. Removal — Control Tubes — Elevator Control System.

a. Remove transmission cowling (2, figure 2-18) and the following access doors (17, 18, 24, and 36), as required to remove elevator control tubes.

b. Detach control tube (20, figure 11-41) from swashplate horn and bellcrank (18) by removing cotter pins (2), nuts (1 and 19), washers (3), and bolts (4 and 9), (figure 11-41, detail A, sheet 2).

c. Detach end of control tube (8) from bellcrank (18) by removing cotter pin (2), nut (5), washers (3), and bolt (7), detail A, sheet 2).

d. Detach opposite end of control tube (8) from idler (25) by removing cotter pin (23), nut (22), washers (24) and bolt (31), (detail B, sheet 3).

e. Detach end of control tube (33) from idler (25) by removing cotter pin (23), nut (21), washers (24), and bolt (32), detail B, sheet 3).

f. Detach opposite end of control tube (33) from bellcrank (40) by removing cotter pin (23), nut (42), washers (24), and bolt (41), (detail C, sheet 3).

g. Detach end of control tube (37) from bellcrank (40) by removing cotter pin (23), nut (39), washers (24), bolt (38), (detail C, sheet 3).

h. Detach opposite end of control tube (37) from bellcrank (54) by removing cotter pin (48), nut (56), washers (46), and bolt (55), (detail D, sheet 4).

i. Detach end of control tube (51) from bellcrank (54) by removing cotter pin (48), nut (52), washers (46), and bolt (53), (detail D, sheet 4).

j. Detach opposite end of control tube (51) from idler (64) by removing cotter pin (48), nut (58), washers (59), and bolt (60), (detail E, sheet 4).

k. Detach end of control tube (62) from idler (64) by removing cotter pin (48), nut (61), washers (59) and bolt (63), (detail E, sheet 4).

l. Detach opposite end of control tube (62) from bellcrank (74) by removing cotter pin (68), nut (69), washers (70), and bolt (75), (detail F, sheet 5).

m. Detach end of control tube (72) from bellcrank (74) by removing cotter pin (68), nut (71), washers (70), and bolt (73), (detail F, sheet 5).

n. Detach opposite end control tube (72) from elevator horn assembly.

Premaintenance Requirements for Control Tubes—Elevator Control System

Conditions	Requirements
Model	All
Part No. or Serial No.	All
Special Tools	None
Test Equipment	Eddy Current Inspection Unit
Support Equipment	None
Minimum Personnel Required	Two
Consumable Materials	None
Special Environmental Conditions	None
References	TM 1-1520-256-23

11-176. Inspection — Control Tubes — Elevator Control System.

a. Inspect control tubes for corrosion and mechanical damage. See figure 11-42 for wear and damage limits. If a crack in the Control Tubes of the Elevator Control System is suspected, refer to TM 1-1520-256-23, Technical Manual Aviation Unit Maintenance (AVUM) and Aviation Intermediate Maintenance (AVIM) manual nondestructive inspection procedures for UH-1 helicopter series.

b. Inspect clevis end holes for wear and clevis end for looseness in tube.

11-177. Repair or Replacement — Control Tubes — Elevator Control System.

a. Polish out corrosion or mechanical damage to control tubes (repair areas only) in accordance with limits of figure 11-42.

b. Any damage in repair areas that is in excess of limits is cause for replacement.

11-178. Installation — Control Tubes — Elevator Control System.

a. Position control tube (20, figure 11-41) to swashplate trunnion bearing and install bolt (4), washers (3), nut (1), and cotter pin (2).

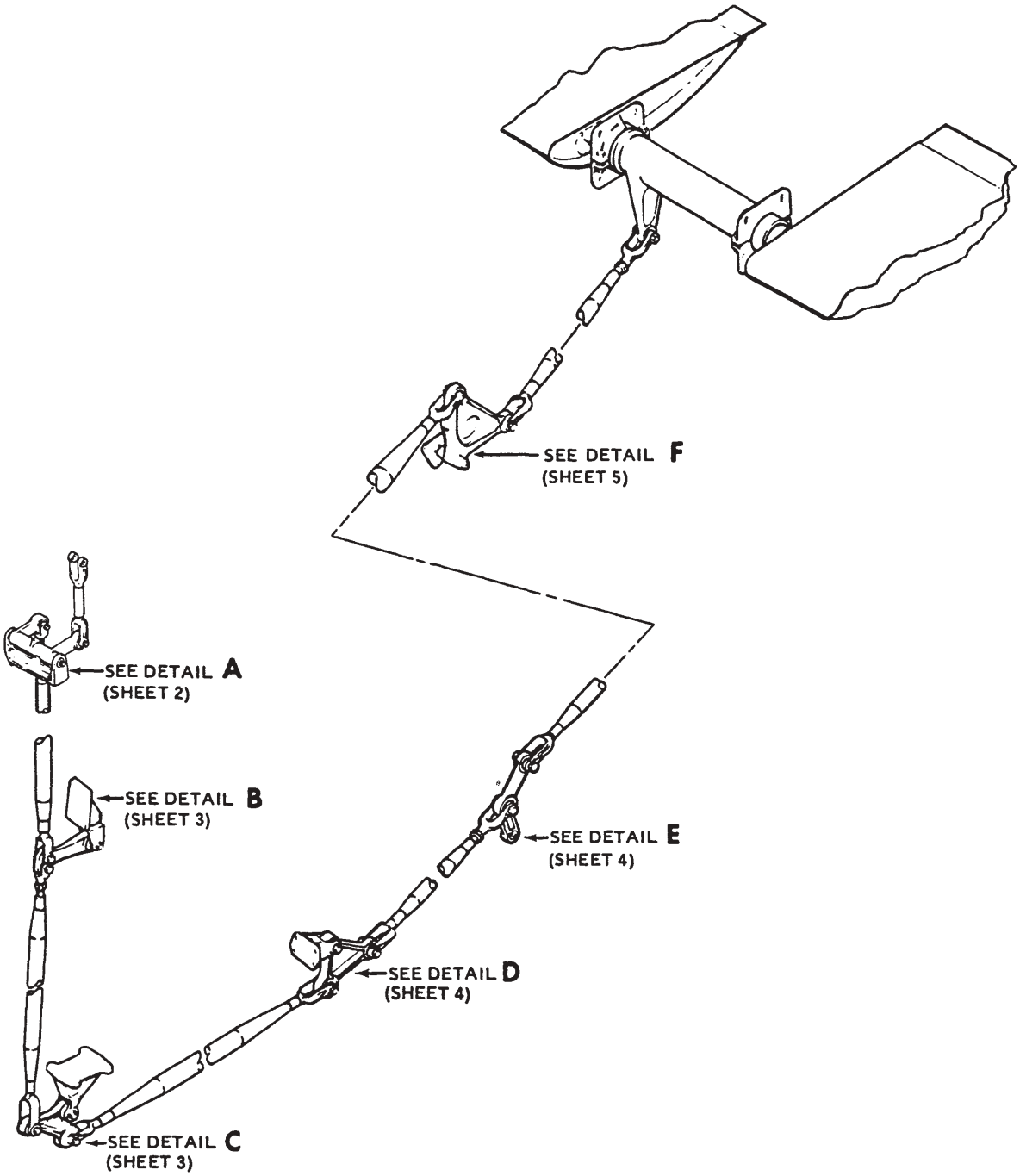

Figure 11-41. Elevator Controls System (Bellcranks, Levers, Supports, and Control Tubes) — Removal and Installation (Sheet 1 of 5)

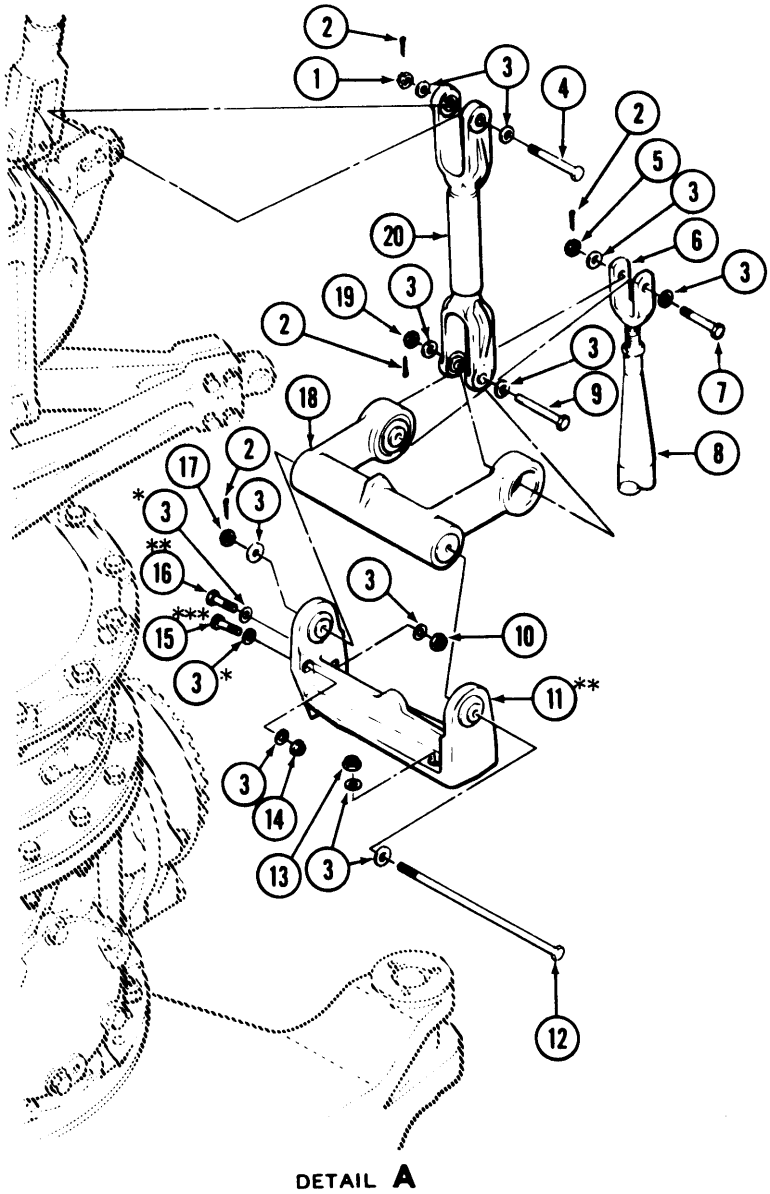

*Install aluminum washers only adjacent to magnesium.
**Install tape (C278) to support prior to installation.
***Apply zinc chromate primer (C312) to bolts prior to installation.

205001-1030-2

1. Nut
2. Cotter pin
3. Washer
4. Bolt
5. Nut
6. Clevis
7. Bolt
8. Control tube
9. Bolt
10. Nut
11. Support
12. Bolt
13. Nut
14. Nut
15. Bolt
16. Bolt
17. Nut
18. Bellcrank
19. Nut
20. Control tube

Figure 11-41. Elevator Controls System (Bellcranks, Levers, Supports, and Control Tubes) – Removal and Installation (Sheet 2 of 5)

218-260 0 - 88 - 15

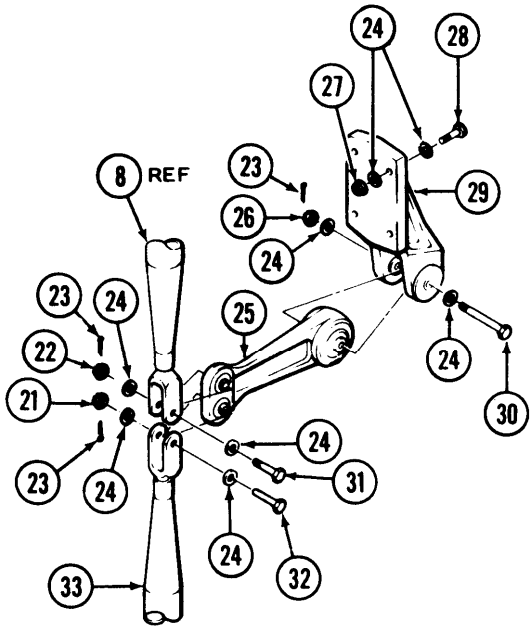

DETAIL B

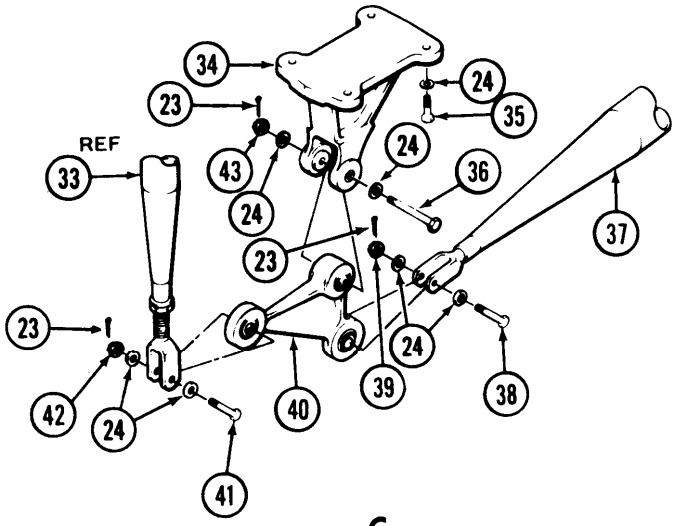

DETAIL C

21. Nut
22. Nut
23. Cotter pin
24. Washer
25. Idler
26. Nut
27. Nut
28. Bolt
29. Support
30. Bolt
31. Bolt
32. Bolt
33. Control tube
34. Support
35. Bolt
36. Bolt
37. Control tube
38. Bolt
39. Nut
40. Bellcrank
41. Bolt
42. Nut
43. Nut

Figure 11-41. Elevator Controls System (Bellcranks, Levers, Supports, and Control Tubes) - Removal and Installation (Sheet 3 of 5)

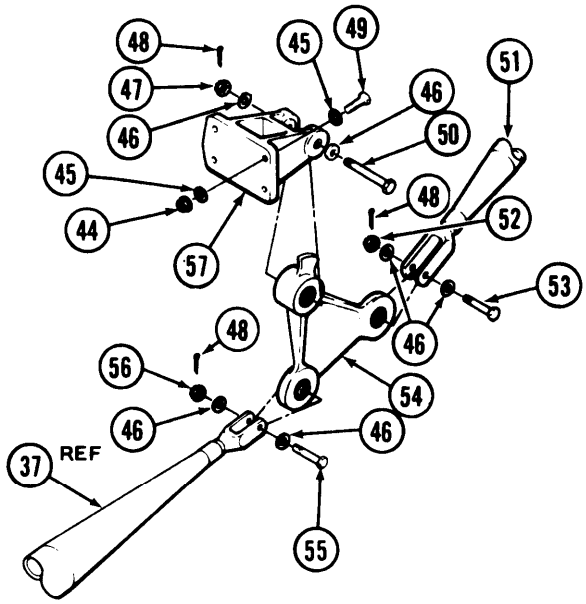

DETAIL D

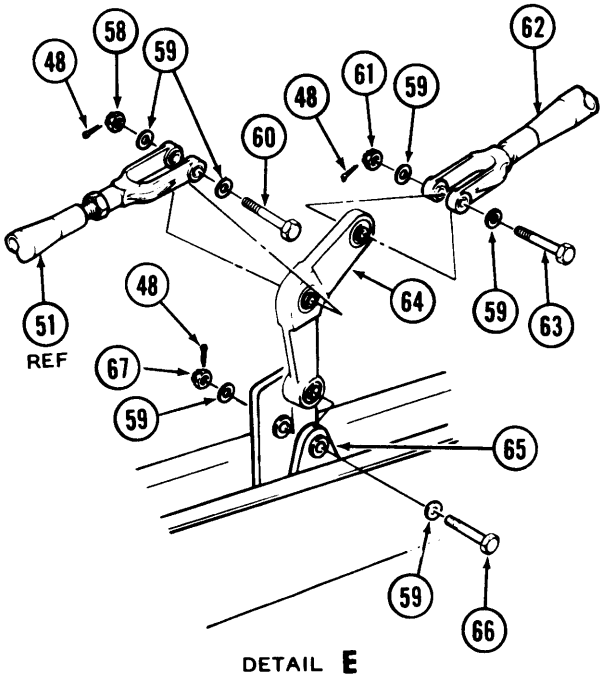

DETAIL E

44.	Nut	52.	Nut	60.	Bolt
45.	Washer	53.	Bolt	61.	Nut
46.	Washer	54.	Bellcrank	62.	Control tube
47.	Nut	55.	Bolt	63.	Bolt
48.	Cotter pin	56.	Nut	64.	Idler
49.	Bolt	57.	Support	65.	Support
50.	Bolt	58.	Nut	66.	Bolt
51.	Control tube	59.	Washer	67.	Nut

Figure 11-41. Elevator Controls System (Bellcranks, Levers, Supports, and Control Tubes) – Removal and Installation (Sheet 4 of 5)

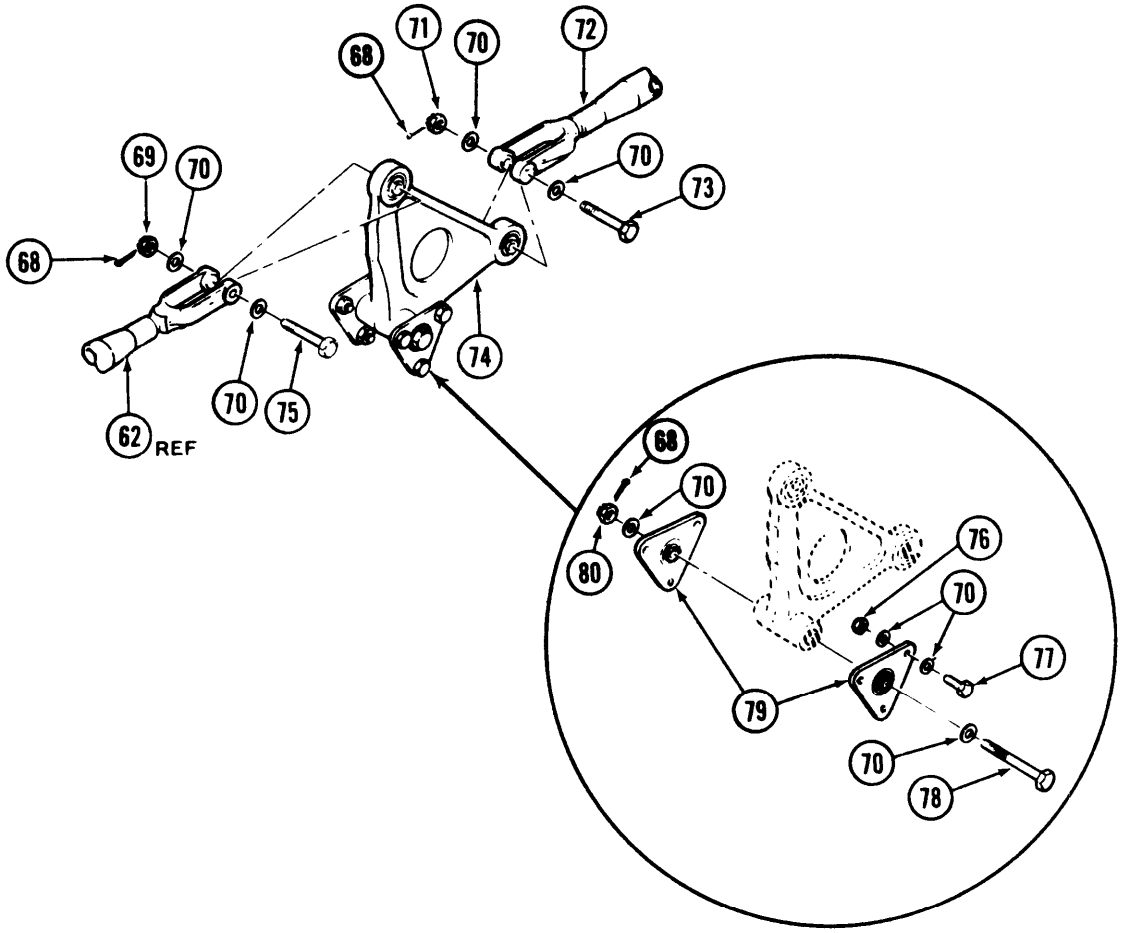

DETAIL F

68. Cotter pin
69. Nut
70. Washer
71. Nut
72. Tube
73. Bolt
74. Bellcrank
75. Bolt
76. Nut
77. Bolt
78. Bolt
79. Supports
80. Nut

Figure 11-41. Elevator Controls System (Bellcranks, Levers, Supports, and Control Tubes) – Removal and Installation (Sheet 5 of 5)

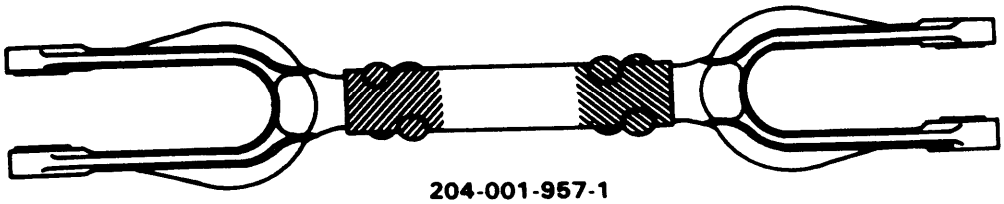

204-001-957-1
204-001-959-1
CONTROL TUBE ASSEMBLY

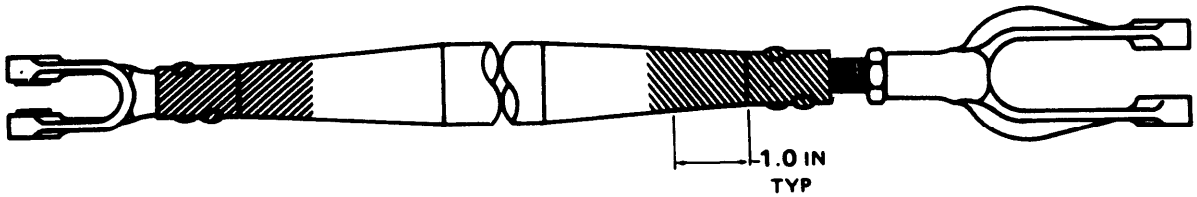

205-001-017-1
205-001-017-7
CONTROL TUBE ASSEMBLY

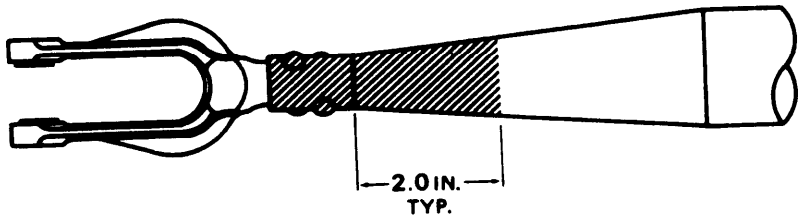

205-001-018-1
205-001-018-5
CONTROL TUBE ASSEMBLY

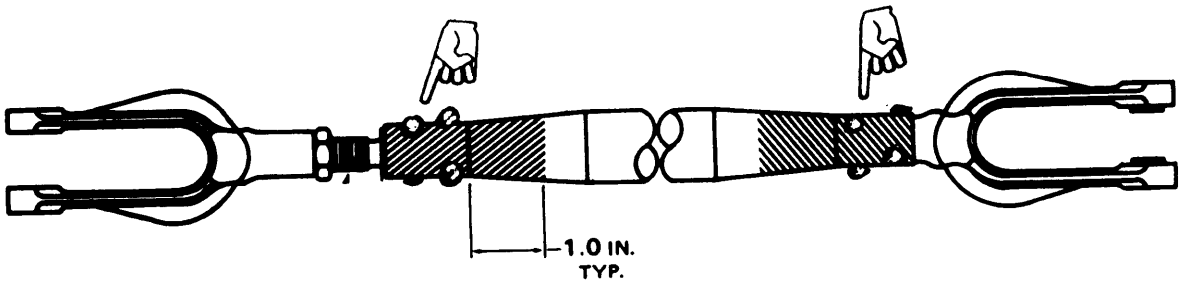

205-001-019-1
CONTROL TUBE ASSEMBLY

Figure 11-42. Wear and Damage Limits (Control Tubes Elevation Control System) (Sheet 1 of 2)

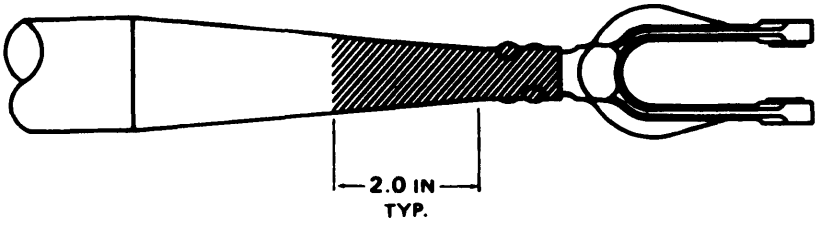

205-001-011-25
CONTROL TUBE ASSEMBLY

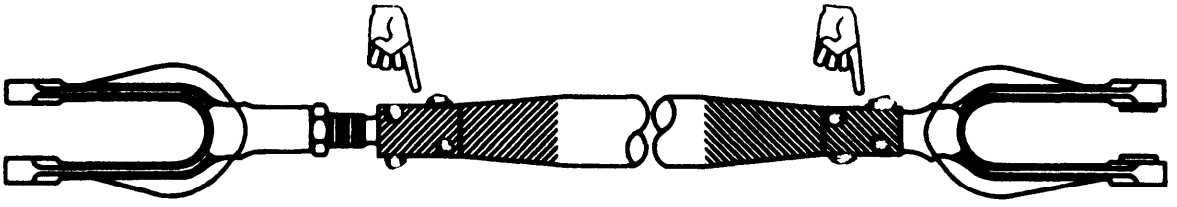

205-001-012-7
CONTROL TUBE ASSEMBLY

DAMAGE AREA REPAIR SYMBOLS

TYPE OF DAMAGE		
MECHANICAL AND CORROSION DAMAGE NO CRACKS ALLOWED	NO DAMAGE ALLOWED	MAXIMUM DAMAGE AFTER CLEAN-UP 0.005 INCH

Figure 11-42. Wear and Damage Limits (Control Tubes Elevation Control System) (Sheet 2 of 2)

Position opposite clevis end to bellcrank (18) and install bolt (9), washers (3), nut (19), and cotter pin (2), (detail A, sheet 2).

b. Position one end of control tube (8) with clevis (6) to bellcrank (18) and install bolt (7), washers (3), nut (5), and cotter pin (2), (detail A, sheet 2).

c. Position opposite end of control tube (8) to idler (25) and install bolt (31), washers (24), nut (22), and cotter pin (23), (detail B, sheet 3).

d. Position upper (nonadjustable) end of control tube (33) to idler (25) and install bolt (32), washers (24), nut (21), and cotter pin (23), (detail B, sheet 3).

e. Position lower (adjustable) end of control tube (33) to bellcrank (40) and install bolt (41), washers (24), nut (42), and cotter pin (23).

f. Position one end of control tube (37) to bellcrank (40) and install bolt (38), washers (24), nut (39), and cotter pin (23), (detail C, sheet 3).

g. Position opposite end of control tube (37) to bellcrank (54) and install bolt (55), washers (46), nut (56), and cotter pin (48), (detail D, sheet 4).

h. Position one end of control tube (51) to bellcrank (54) and install bolt (53), washers (46), nut (52), and cotter pin (48), (detail D, sheet 4).

i. Position opposite end of control tube (51) to idler (64) and install bolt (60), washers (59), nut (58), and cotter pin (48), (detail E, sheet 4).

j. Position one end of control tube (62) to idler (64) and install bolt (63), washers (59), nut (61), cotter pin (48), (detail E, sheet 4).

k. Position opposite end of control tube (62) to bellcrank (74) and install bolt (75), washers (70), nut (69) and cotter pin (68), (detail F, sheet 5).

l. Position nonadjustable end of control tube (72) to bellcrank (74) and install bolt (73), washers (70), nut (71), cotter pin (68), (detail F, sheet 5).

m. Position aft (adjustable) end of control tube (72) to elevator horn assembly.

n. Rig elevator (synchronized) controls in accordance with paragraph 11-172.

o. Install transmission fairing (2, figure 2-18) and access doors (17, 18 and 24).

11-179. BELLCRANKS, LEVERS AND SUPPORTS – ELEVATOR CONTROL SYSTEM.

11-180. Description — Bellcranks, Levers and Supports — Elevator Control System. Various bellcranks, levers and supports are incorporated in the elevator control system. The supports are airframe mounted and provide a pivot mount for levers and bellcranks.

11-181. Removal — Bellcranks, Levers and Supports — Elevator Control System. a. Disconnect control tubes (8, 20, 33, 37, 51, 62, and 72, figure 11-41) from bellcranks or levers as necessary (paragraph 11-175).

b. Detach bellcrank (18, figure 11-41) from support (11) by removing bolt (12), cotter pin (2), nut (17), and washers (3). Detach support from transmission top case by removing nuts (13) and washers (3) from two studs, and removing two bolts (15) and one bolt (16) with nuts (10 and 14) and washers (3) from mounting bracket, (detail A, sheet 2).

c. Through access door on right side of pylon support, detach idler (25) from support (29) by removing bolt (30), cotter pin (23), nut (26), and washers (24). Detach support (29) from transmission fifth-mount fitting by removing four bolts (28) with nuts (27) and washers (24), (detail B. sheet 3).

d. Detach bellcrank (40) from support (34) at lower right side in pylon compartment, by removing bolt (36), cotter pin (23), nut (43), and washers (24). Detach support from structure by removing four bolts (35) and washers (24), (detail C, sheet 3).

e. Detach bellcrank (54) from support (57), in aft-center fuselage compartment, by removing bolt (50), cotter pin (48), nut (47), and washers (46). Detach support from structure by removing four bolts (49) with nuts (44) and washers (45), (detail D, sheet 4).

f. Detach idler (64) from support (65) by removing bolt (66), cotter pin (48), nut (67), and washers (59). Detach support from bulkhead by removing bolts and washers (detail E, sheet 4).

g. Detach bellcrank (74) from supports (79) by removing bolt (78), cotter pin (68), nut (80), and washers (70). Detach support (79 from tailboom structure by removing three bolts (77) and washers (70) and nuts (76), (detail F, sheet 5).

Premaintenance Requirements for Bellcranks, Levers, and Supports—Elevator Control System

Conditions	Requirements
Model	All
Part No. or Serial No.	All
Special Tools	None
Test Equipment	Eddy Current Inspection Unit
Support Equipment	None
Minimum Personnel Required	Two
Consumable Materials	None
Special Environmental Conditions	None
References	TM 1-1520-256-23

11-182. Inspection — Bellcranks, Levers and Supports — Elevator Control System.

a. Inspect bellcranks, levers and supports for loose bearings. Refer to paragraph 11-185 for bearing limits.

b. Inspect bellcranks, levers and supports for corrosion and mechanical damage. See figure 11-43 for inspection limits. If a crack in the Bellcranks, Levers, or Supports of the Elevator Control System is suspected, refer to TM 1-1520-256-23, Technical Manual Aviation Unit Maintenance (AVUM) and Aviation Intermediate Maintenance (AVIM) manual nondestructive inspection procedures for UH-1 helicopter series.

11-183. Repair or Replacement — Bellcranks, Levers and Supports — Elevator Control System (AVIM).

a. Replace loose or damaged bearings in bellcranks, levers and supports. Refer to paragraph 11-185 for bearing replacement.

b. Remove minor surface corrosion or repair damage areas using fine grit sandpaper (C235). Observe limits shown in figure 11-43.

11-184. Installation — Bellcranks, Levers and Support — Elevator Control System.

a. In tailboom at Boom Station 93.84, position supports (79, figure 11-41) to mounting holes on bulkhead. Install three bolts (77), nuts (76) with anodized washers, (70), (detail F, sheet 5).

b. Position bellcrank (74), with pivot pointing down in supports (79). Install bolt (78) with washer (70) under head and under nut (80). Torque nut and install cotter pin (68), (detail F, sheet 5).

c. In center-aft compartment of forward fuselage, position support (65) to mounting holes on tailboom bulkhead (Boom Station 45.03). Install bolts with anodized washers. Torque bolts (detail E, sheet 5).

d. Position idler (64) with tip on pivot forward in support (65). Install bolt (66) with anodized washers (59) under head and under nut (67). Torque nut and install cotter pin (48), (detail E, sheet 5).

e. In aft fuselage compartment, position support (57) for bellcrank (54) on aft right-hand side of Station 213.87 bulkhead, with straight side of support down. Align to mounting holes and install four bolts (49) with anodized washers (45) and nuts (44), (detail D, sheet 4).

f. Position bellcrank (54), with tab on pivot pointing up and aft, in support. Install bolt (50) with anodized washers (46) under head and under nut (47). Torque nut and install cotter pin (48), (detail D, sheet 4).

g. From lower right side of fuselage in pylon compartment, position support (34) with straight side forward and align to mounting holes at Station 157:45 right-hand side at water line 27:50. Install four bolts (35) with anodized washers (24). Torque bolt (detail C, sheet 3).

h. Position bellcrank (40), with longer arm forward, in support (34). Install bolt (36) with anodized washers (24) under head and under nut (43). Torque nut and install cotter pin (23), (detail C, sheet 3).

i. Position support (29), with ears pointing down, on aft right-hand side of fifth-mount fitting. Align to mounting holes and install four bolts (28) with anodized washers (24) under heads and under nuts (27). Torque nuts (detail B, sheet 3).

j. Position idler (25) in support (29). Install bolt (30) with anodized washers (24) under heads and under nuts (26). Torque nuts and install cotter pin (23), (detail B, sheet 3).

k. At aft right-hand side of transmission, position support (11) with tape (C278) between faying surface on two studs on top case of transmission. Install two nuts (13) with anodized washers (3) on studs. Torque nuts. Align opposite end of support to bracket. Apply unreduced zinc chromate primer (C312) to bolts (15 and 16) and install two bolts (15) and one bolt (16) with anodized washers (3) under heads and under nuts. Torque nuts.

l. Position bellcrank (18), with both arms aft and center stop lug up, in support (11). Install bolt (12) from inboard, with washers (3) under head and under nut (17). Torque nut and install cotter pin (2), (detail A, sheet 2).

m. Attach control tubes (8, 20, 33, 37, 51, 62, or 72) to bellcranks or levers as required (paragraph 11-178).

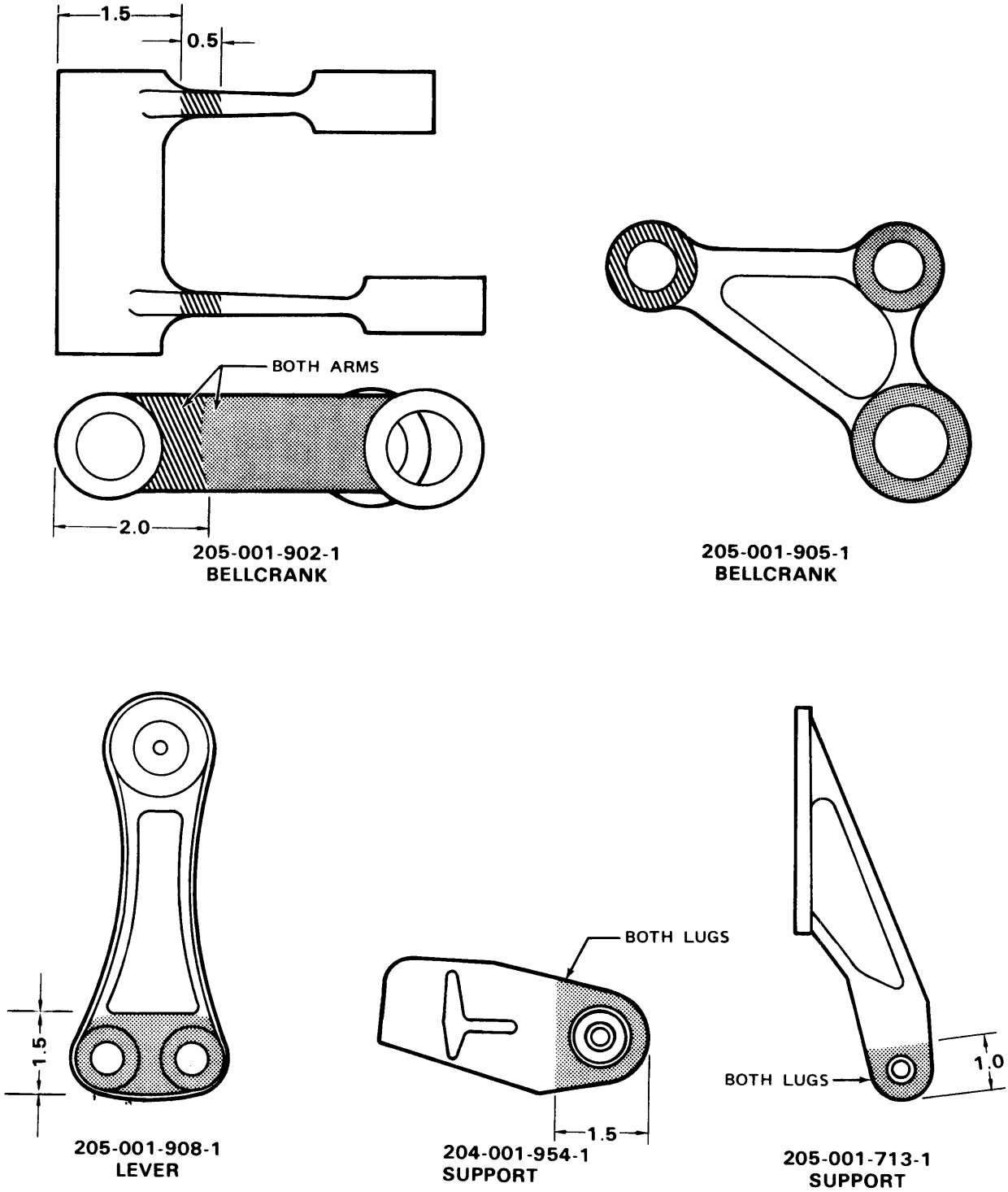

Figure 11-43. Wear and Damage Limits (Bellcranks, Levers, and Supports) — Elevator Control System (Sheet 1 of 3)

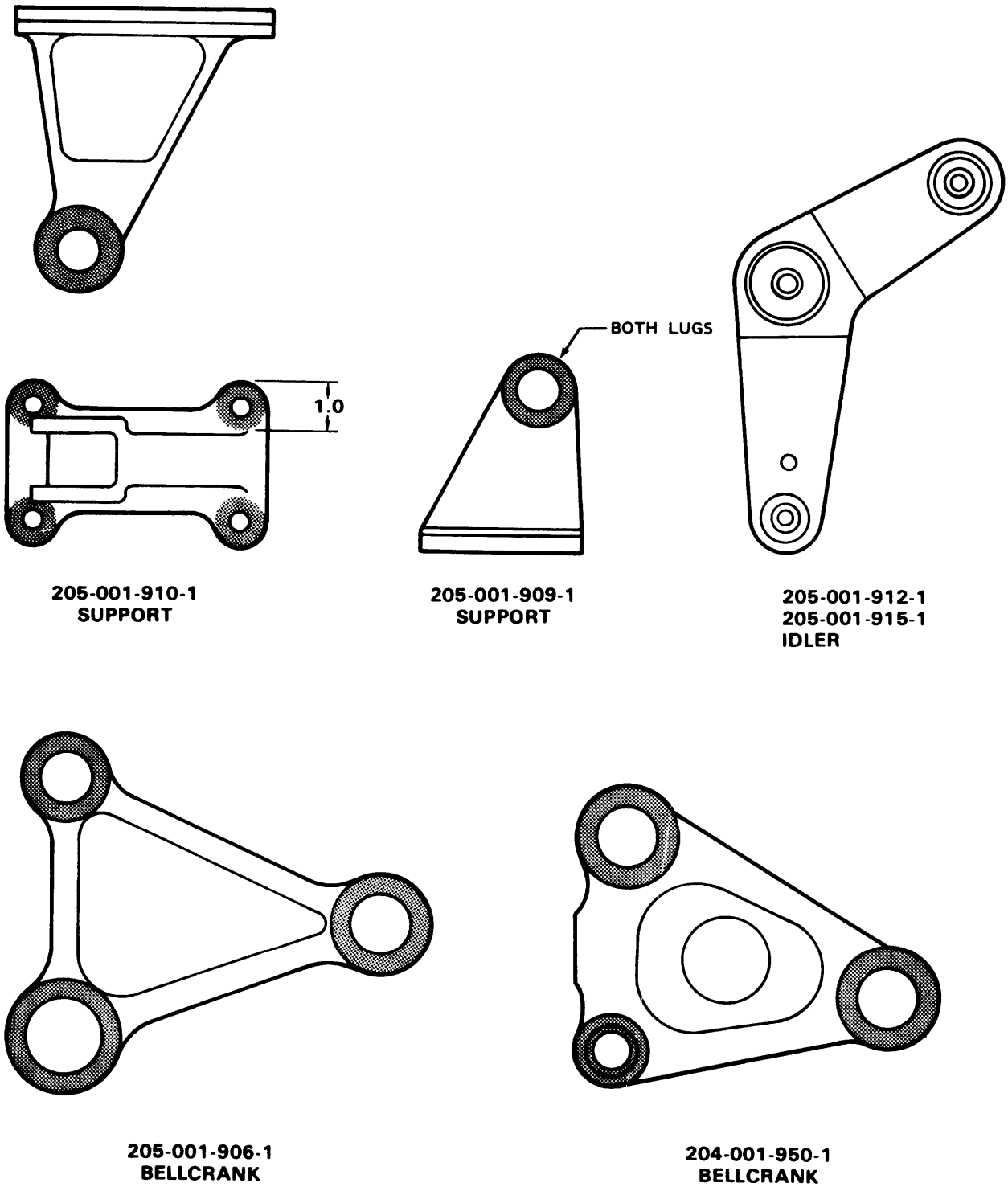

Figure 11-43. Wear and Damage Limits (Bellcranks, Levers, and Supports) — Elevator Control System (Sheet 2 of 3)

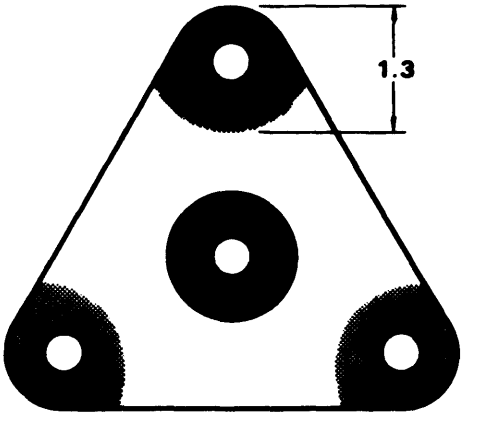

204-001-793-5
SUPPORT

DAMAGE AREA REPAIR SYMBOLS

TYPE OF DAMAGE			
MECHANICAL DAMAGE (AFTER CLEAN-UP)	0.015 IN.	0.010 IN.	0.005 IN.
CORROSION DAMAGE (BEFORE CLEAN-UP)	0.0075 IN.	0.005 IN.	0.0025 IN.
(AFTER CLEAN-UP)	0.015 IN.	0.010 IN.	0.005 IN.
MAXIMUM AREA PER FULL DEPTH REPAIR	1 IN. SQ	0.10 IN. SQ.	0.10 IN. SQ.
NUMBER OF REPAIRS	ONE PER AREA	ONE PER AREA	ONE PER AREA
EDGE CHAMFER	0.05 BY 0.05	0.04 BY 0.04	
BORE DAMAGE	0.002 INCH FOR ONE-FOURTH CIRCUMFERENCE		
NO CRACKS ALLOWED			

ALL DIMENSIONS IN INCHES UNLESS OTHERWISE SPECIFIED

NOTE

Cable guard brackets and pulley brackets are not shown in this figure, all repair or replace criteria of this figure and table apply to the brackets as well as to the parts shown.

Figure 11-43. Wear and Damage Limits (Bellcranks, Levers, and Supports – Elevator Control System (Sheet 3 of 3)

n. Rig synchronized elevator control system (paragraph 11-172).

11-185. BEARINGS.

11-186. Inspection-Bearings. a. Inspect bearings of bellcrank-to-servo-tube assembly (14, figure 11-1) for **0.005** inch radial and **0.030** inch axial maximum allowable wear. Any wear in excess of these limits is cause for replacement.

b. Maximum allowable elongation to a bushing or clevis hole in control system is **0.003** inch.

c. Maximum allowable lateral chuck or play for collective pitch jackshaft is **0.060** inch.

d. Check pilots collective stick friction after installation (paragraph 11-27).

e. Inspect jackshaft-to-mixing-lever tube assembly (12, figure 11 -11) bearing for **0.005** inch radial and **0.030** inch axial maximum allowable wear.

f. Inspect bellcrank to servo valve tube assemblies (21 and 26) bearings for **0.005** inch radial and **0.030** axial maximum allowable wear.

g. Maximum allowable elongation of bushing or clevis hole in control system is **0.003** inch.

h. Maximum allowable lateral play on jackshaft (10) is **0.200** inch.

i. Maximum allowable wear of jackshaft bearings is **0.010** inch radial.

j. Mechanical damage limits for exposed surfaces of clevis and rod end bearings is **0.010** inch in depth before and after repair. Corrosion damage limit is **0.010** inch after repair.

k. Bellcrank (Figure 11-39), P/N 205-001-728-1, cracks and debonding of the elastomer, surrounding the bearing, may be repaired (provided that total circumferential separation has not occured around bearing). Use adhesive/sealant (C317) for repair. Keep adhesive/sealant from the uni-ball area. Bearing, P/N J11672-3, will be unserviceable when radial play exceeds **0.012** inch and/or axial play exceeds **0.030** inch.

11-187. Repair or Replacement-Bearings. The following instructions contain bearing replacement information on the bellcranks, levers and supports of the flight control system (figure 11-44). Replacement is limited to bearings that are retained by a ring staked sleeve and bearings that do not require staking. Figure 11-44 illustrates each assembly and provides sleeve diameter requirements. Each detail is coded to footnotes located on the last page of the illustration. The footnotes provide specific information on each assembly and must be used in conjunction with the following instructions.

a. Remove bearing as follows:

(1) Place bearing on a suitable support having clearance for bearing. Support the bearing housing.

(2) Apply pressure to outer race of bearing and remove bearing from housing.

b. Inspect housing by method specified in note 1, figure 11-44.

WARNING

Cleaning materials are flammable and toxic. Avoid skin contact and breathing of solvent vapors.

c. Clean aged primer from housing bore. Clean bore with aliphatic naphtha (C178).

d. Inspect chamfered edge of bearing bore hole each side to depth and degree specified in figure 11-44.

e. Remove any visible burrs on replacement sleeve with 320 grit or finer sandpaper (C235). Chamfer sleeve both ends, **0.005** inch x **45** degrees maximum.

WARNING

Cleaning materials are flammable and toxic. Avoid skin contact and breathing of solvent vapors.

f. If required, ream sleeve to dimension shown on figure 11-44, with a surface finish of 63 microinches. Clean sleeve thoroughly with aliphatic naphtha (C178).

CAUTION

Refer to step g. for applications requiring zinc chromate primer and to step h. and i. for sealant application. Do not allow primer or sealant to contaminate bearings.

g. Apply wet primer (C312) to sleeve OD and housing bore as required by figure 11-44. Press sleeve into housing with equal projection on each side. Apply wet primer to sleeve ID and bearing OD and install bearing, centered equally from each end.

WARNING

Cleaning materials are flammable and toxic. Avoid skin contact and breathing of solvent vapors.

h. Cleaning housing bore, sleeve and bearing OD with naphtha (C178). Apply primer (C211) (grade as specified by figure 11-44) to sleeve OD and housing bore. Allow three to five minutes drying and apply sealant (C211) (grade as specified by figure 11-44) sparingly to sleeve and bore. Install sleeve and check for equal projection each side. Sealant cure time is 10 to 40 minutes.

CAUTION

Do not allow sealant to contaminate bearings.

i. Apply primer (C211) (grade as specified by figure 11-44) to ID of sleeve and OD of bearing. Allow three to five minutes drying time and apply sealant (grade as specified by figure 11-44) to bearing OD and sleeve ID. Install bearing, centered equally from each end. After bearing is centered, apply additional drops of sealant to parting line between bearing and sleeve.

CAUTION

Staking operation should be performed within 30 minutes after sealant application. Do not allow sealant to cure before staking.

NOTE

Select a staking tool to accomplish a ring stake as shown in figure 11-44. The tool shall be so designed to have a 90 degree ring stake, using a radius equal to the retaining hole plus 1/2 the thickness of the sleeve, within plus or minus 0.0025 inch tolerance.

j. Ring stake sleeve both sides in accordance with figure 11-44.

k. Check bearing for freedom of movement after curing of sealant. Check that bearing is true to surface.

l. Inspect housing by fluorescent penetrant per MIL-I-6866. Refer to TM 55-1500-335-23.

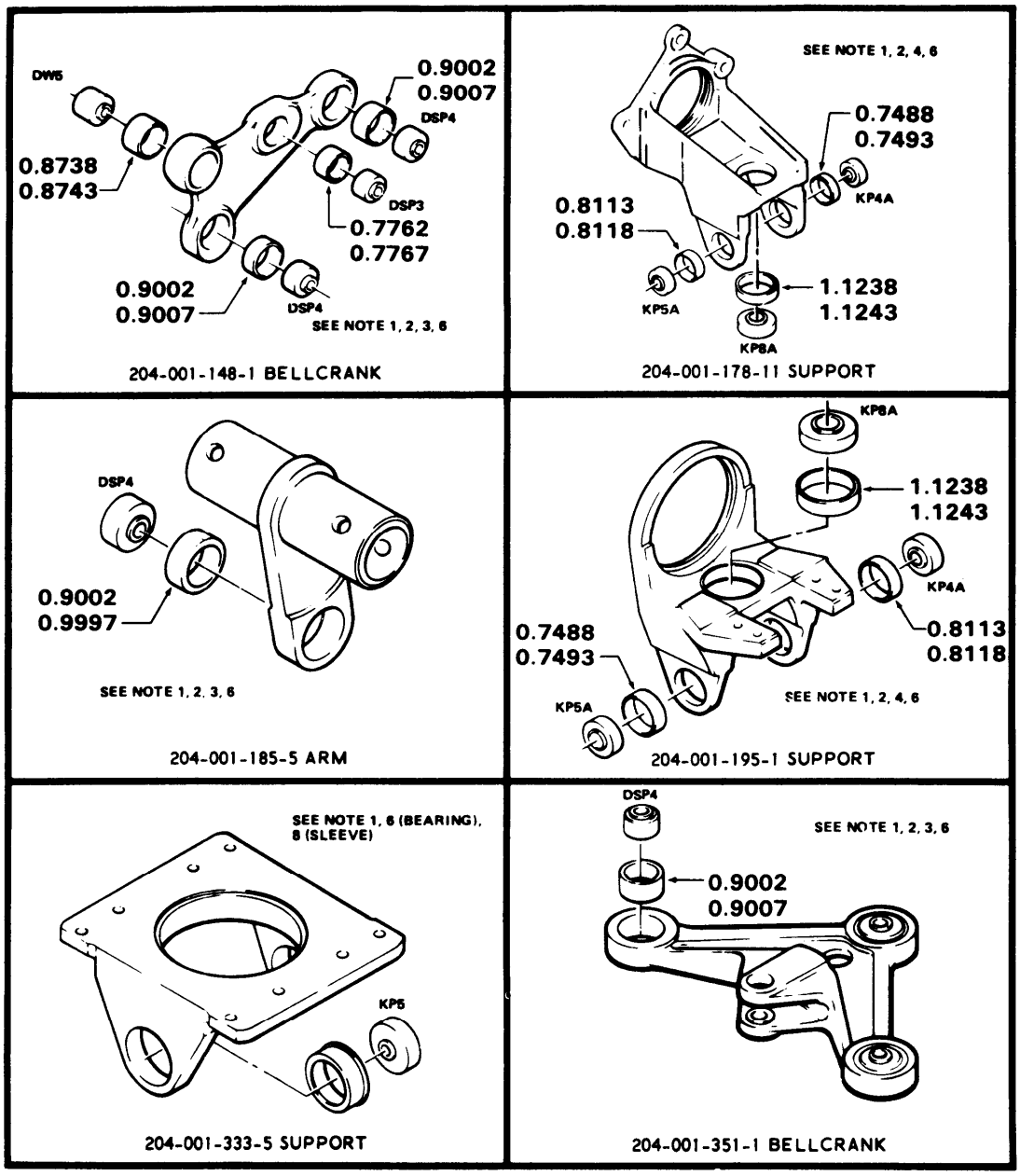

DW 5	Bearing	Radial 0.006 Axial 0.030
DSP3	Bearing	Radial 0.006 Axial 0.030
DSP4	Bearing	Radial 0.006 Axial 0.030
KP5	Bearing	Radial 0.006 Axial 0.030
KP4A	Bearing	Radial 0.006 Axial 0.030
KP5A	Bearing	Radial 0.006 Axial 0.030
KP8A	Bearing	Radial 0.007 Axial 0.030

Figure 11-44. Bearing Replacement (Sheet 1 of 7)

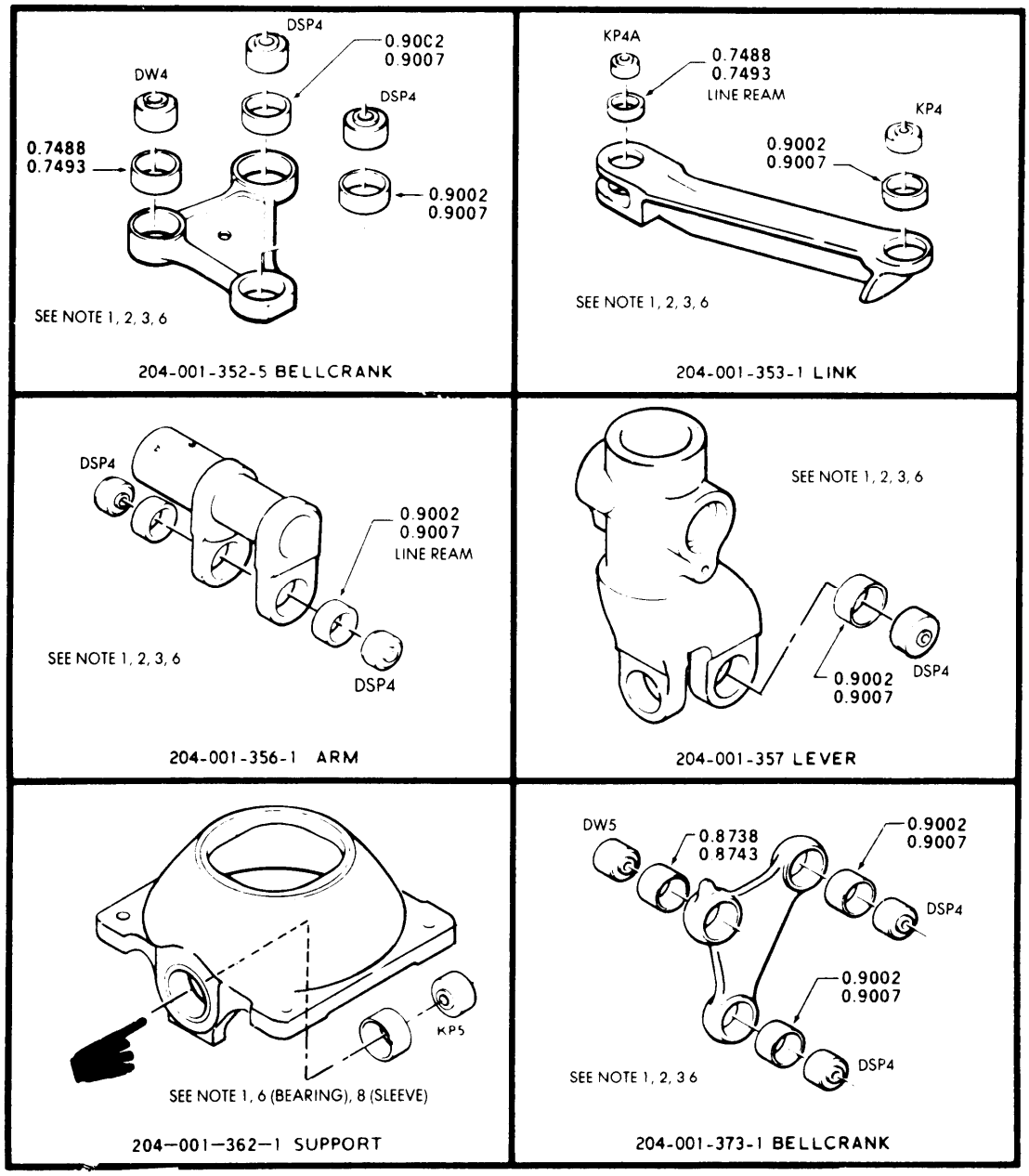

KP4	Bearing	Radial	0.006	Axial	0.030
KP5	Bearing	Radial	0.006	Axial	0.030
KP4A	Bearing	Radial	0.006	Axial	0.030
DW4	Bearing	Radial	0.006	Axial	0.030
DW5	Bearing	Radial	0.006	Axial	0.030
DSP4	Bearing	Radial	0.006	Axial	0.030

Figure 11-44. Bearing Replacement (Sheet 2 of 7)

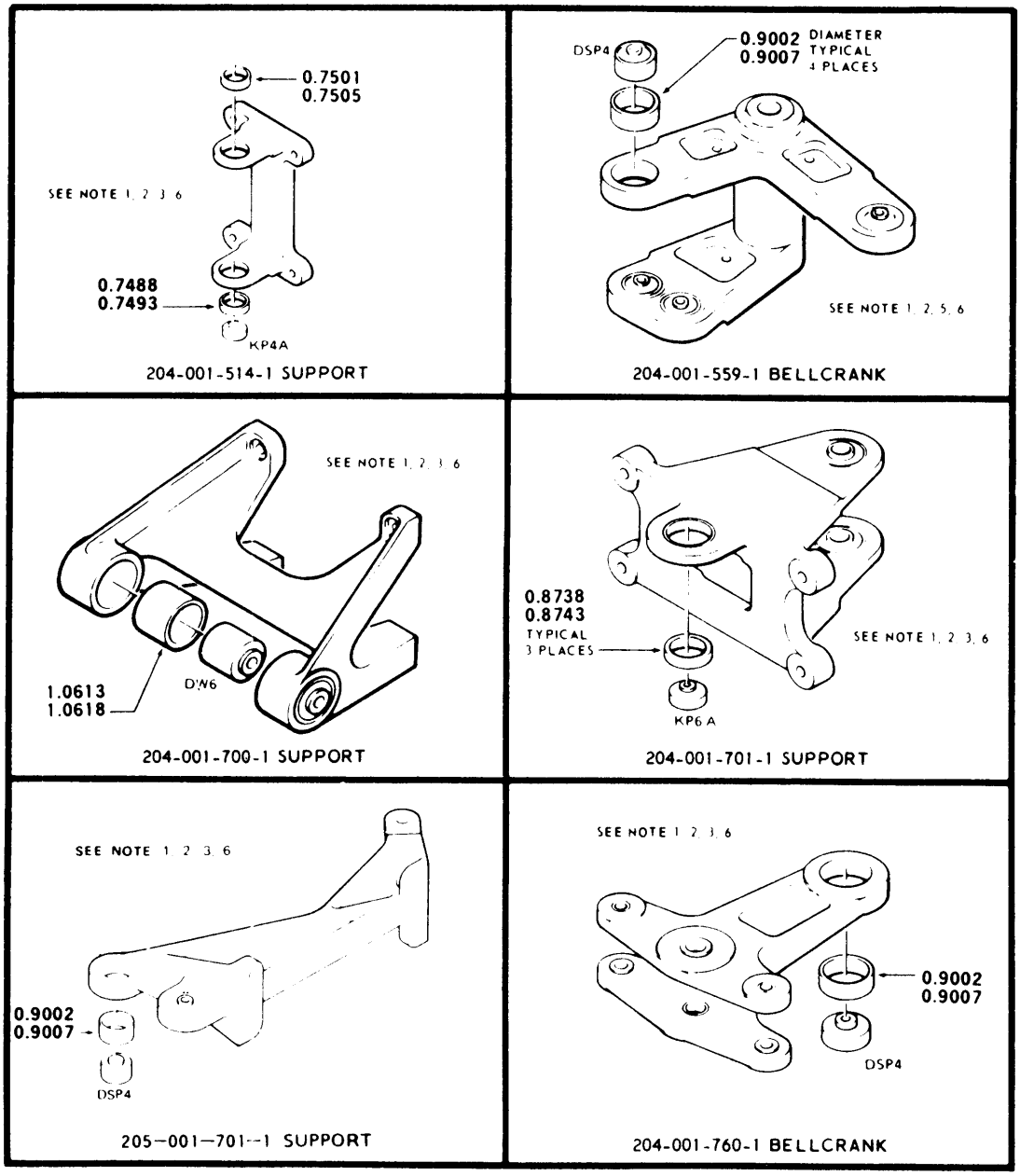

DSP4	Bearing	Radial	0.012	Axial	0.030
KP4A	Bearing	Radial	0.005	Axial	0.030
DW6	Bearing	Radial	0.005	Axial	0.030
KP6A	Bearing	Radial	0.005	Axial	0.030

Figure 11-44. Bearing Replacement (Sheet 3 of 7)

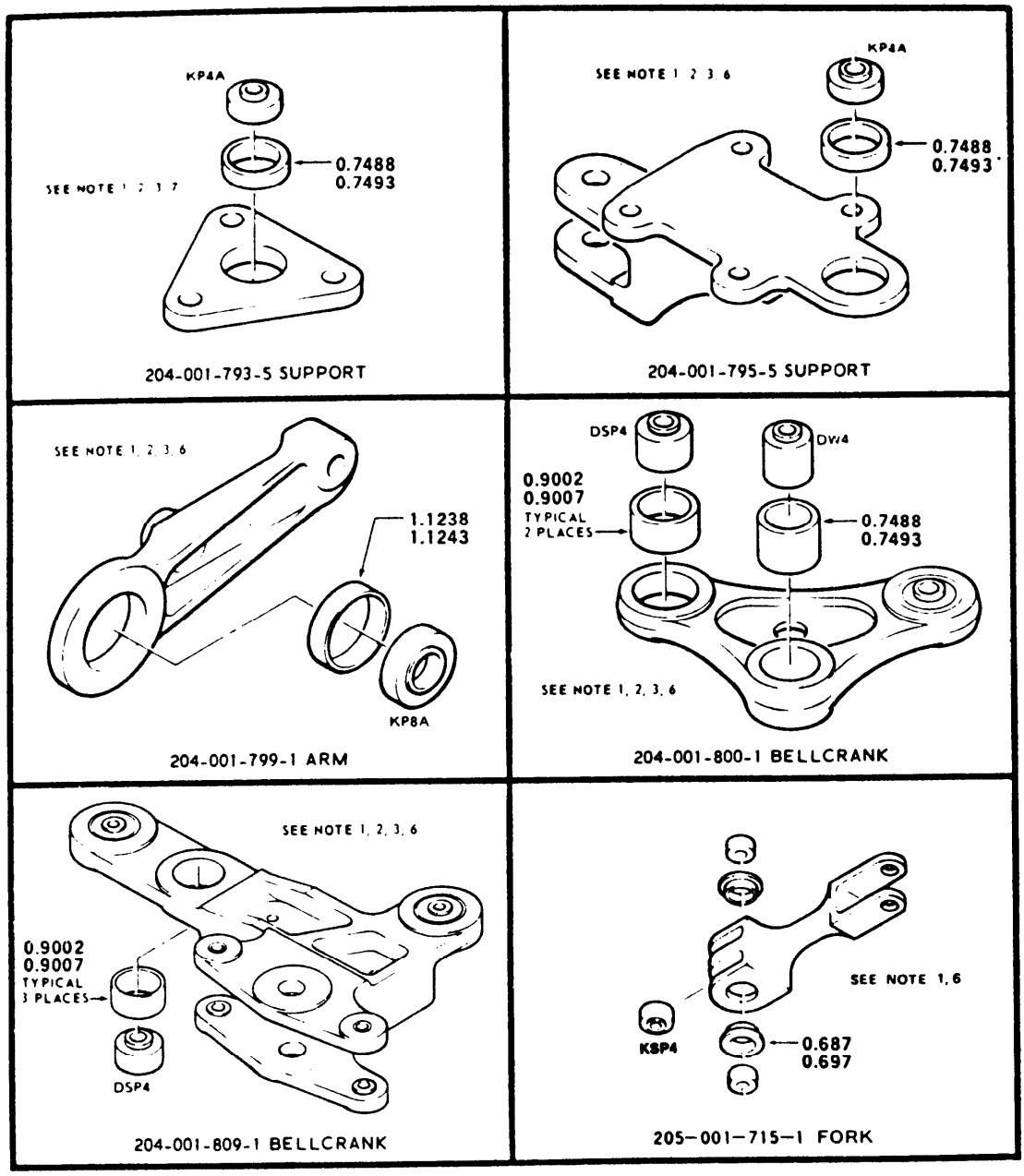

DW4	Bearing	Radial	0.005	Axial	0.030
DSP4	Bearing	Radial	0.012	Axial	0.030
KP4A	Bearing	Radial	0.005	Axial	0.030
KSP4	Bearing	Radial	0.012	Axial	0.045
KP8A	Bearing	Radial	0.005	Axial	0.030

Figure 11-44. Bearing Replacement (Sheet 4 of 7)

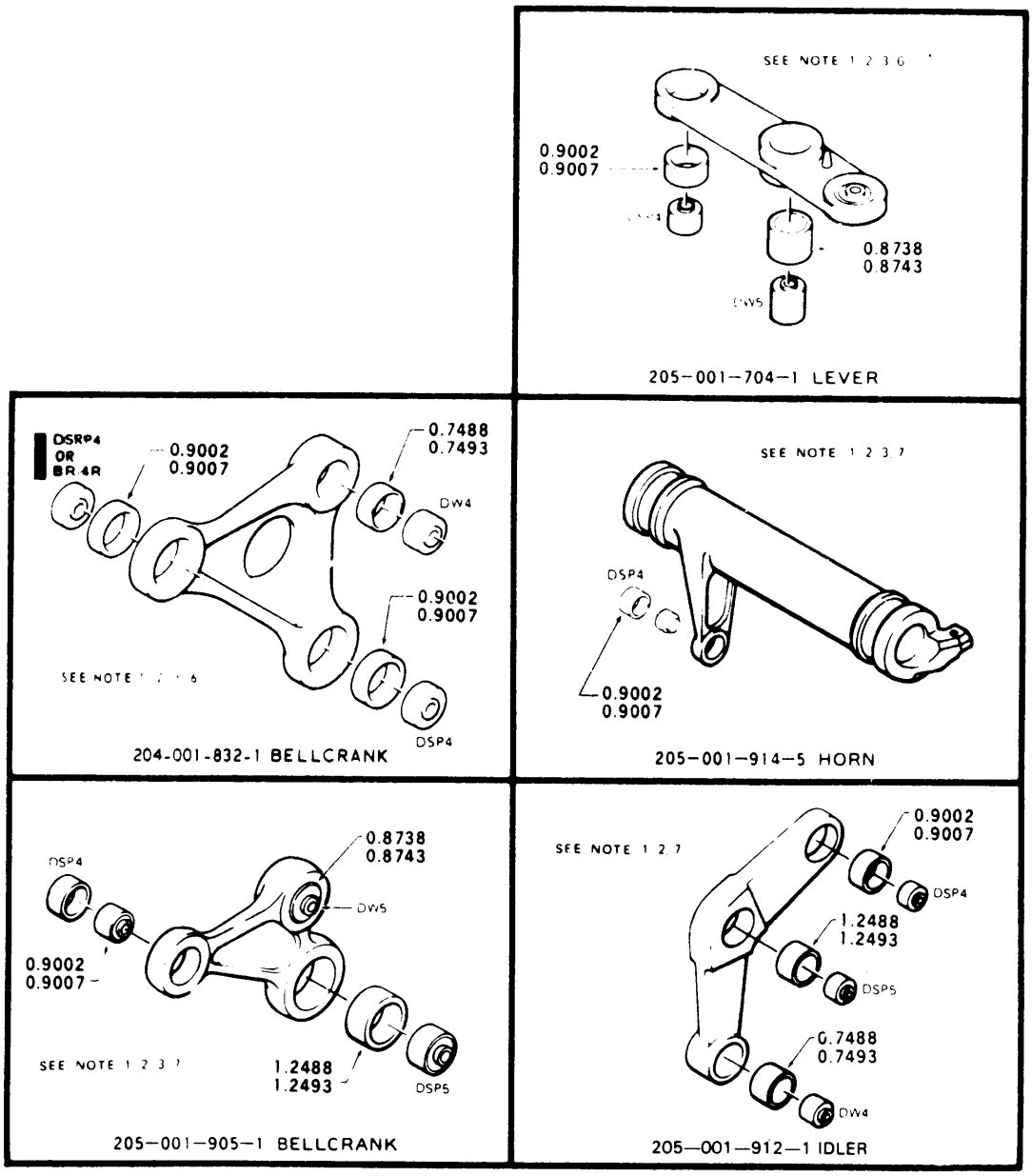

DW4	Bearing	Radial	0.005	Axial	0.030
DSP4	Bearing	Radial	0.012	Axial	0.030
BR-4R	Bearing	Radial	0.012	Axial	0.030
DSP5	Bearing	Radial	0.012	Axial	0.030
DSRP4	Bearing	Radial	0.012	Axial	0.030

Figure 11-44. Bearing Replacement (Sheet 5 of 7)

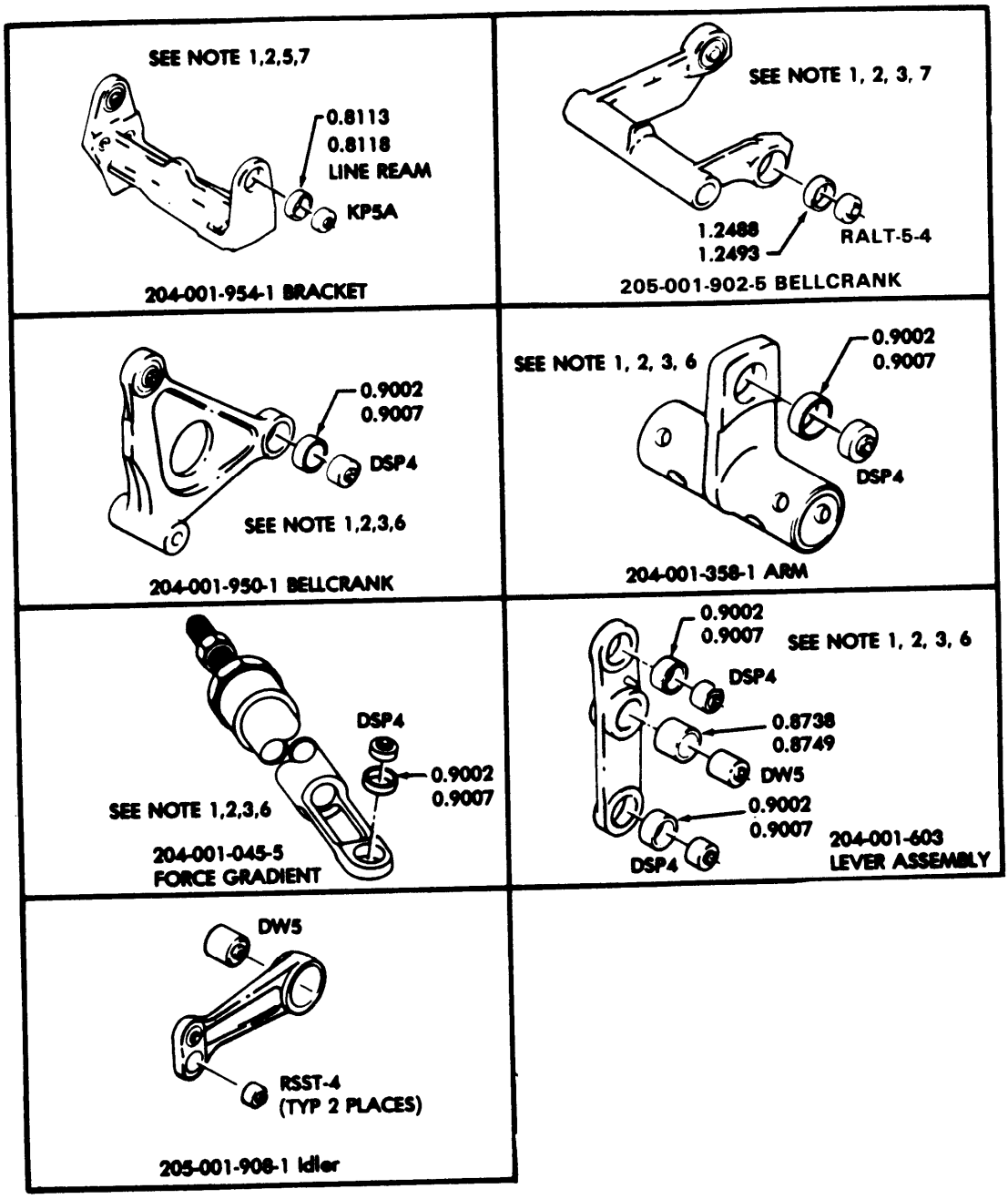

DSP4 Bearing Radial 0.012 Axial 0.030
DW5 Bearing Radial 0.005 Axial 0.030
DSP5 Bearing Radial 0.012 Axial 0.030
RALT 5-4 Bearing Radial 0.012 Axial 0.030

KP5A Bearing Radial 0.005 Axial 0.030
RSST-4 Bearing Radial 0.012 Axial 0.030

Figure 11-44. Bearing Replacement (Sheet 6 of 7)

NOTE

1. Use the Eddy Current Method to inspection housing (reference TM 1-1520-256-23) after bearing removal.
2. Ring stake sleeves on both sides using special tool kit (T99.1) in accordance with TM 55-1500-335-23.
3. Chamfer 0.030 inch depth x 45 degrees each side of hole in housing.
4. Chamfer 0.032 inch depth x 45 degrees each side of hole in housing.
5. Chamfer 0.025 inch depth x 45 degrees each side of hole in housing.
6. Coat sleeve ID and OD, bearing OD, and housing bore with wet zinc chromate primer (C253) during assembly.
7. Retain sleeve and bearing with retaining compound mil-5-22473, grade CV, (C79).
8. Retain sleeve and bearing with anaerobic sealant, grade AA and locquic primer, grade Q, (C79).
9. All radial and axial tolerance are the maximum.

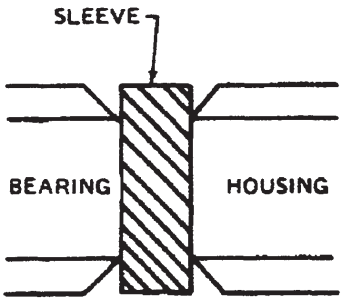

BEFORE STAKING

TYPICAL RING STAKE UTILIZING SLEEVE. CROSS SECTIONAL VIEW

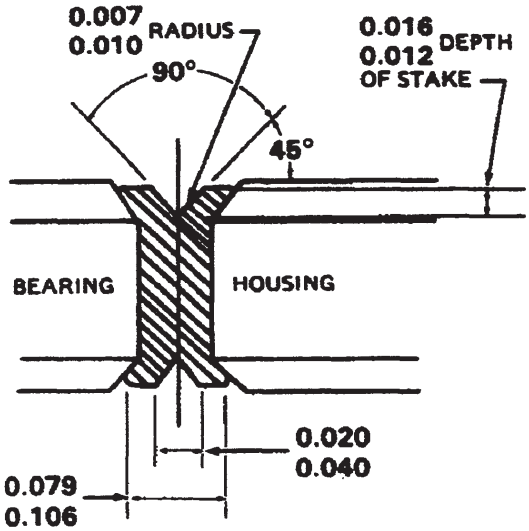

AFTER STAKING OF ALUMINUM SLEEVE

CROSS SECTIONAL VIEW. ALL DIMENSIONS TYPICAL

Figure 11-44. Bearing Replacement (Sheet 7 of 7)

CHAPTER 12

UTILITY SYSTEMS

SECTION 1. FIRE DETECTOR SYSTEM

12-1. FIRE DETECTION SYSTEM – ENGINE.

12-2. Description — Fire Detection System — Engine. The engine fire detection system (figure 12-1) consists of a fire detector unit, fire detector control, FIRE warning light and FIRE DETECTOR TEST pushbutton switch. The fire detector unit consists of two heat sensitive elements inside a protective shield and mounted in spring support brackets (3) inside each engine cowl. As an element is heated, the resistance between the center conductor and electrically grounded outer shield decreases. This resistance is compared to resistor R11 (6) mounted on the detector control (5) and when the element resistance is less than R11 the FIRE warning light on the instrument panel is illuminated. The FIRE DETECTION TEST switch located on the instrument panel simulates a fire by electrically grounding the detector element at one end opposite from the control. This checks operation of the control and continuity through the element. In the OFF position, the switch connects the ends of the element together enabling the element to remain active to sense a fire anywhere along its end. If the element is broken, it will still sense a fire from either end to the first break.

12-3. Troubleshooting — Fire Detection System – Engine. The following Table 12-1 is a list of conditions, test or inspection and corrective action.

NOTE

Before using this table, ensure all normal operational checks have been performed.

Table 12-1. Troubleshooting Fire Detector

CONDITION

TEST OR INSPECTION

CORRECTIVE ACTION

1. Indicator light inoperative.

STEP 1. Check for burned out bulb.

Replace bulb (paragraph 9-6).

STEP 2. Check for defective test switch.

Replace switch if defective (paragraph 9-5).

STEP 3. Check for loose electrical connections.

Repair faulty connections (paragraph 12-7).

STEP 4. Check for broken or disconnected detector wire.

Replace or connect detector wire (paragraph 12-7).

Table 12-1. Troubleshooting Fire Detector (Cont)

CONDITION

TEST OR INSPECTION

CORRECTIVE ACTION

STEP 5. Perform test in accordance with paragraph 12-4

Replace fire detector control box if test and control circuit does not work (paragraph 12-7).

Replace fire detector wire if test or alarm circuit shows malfunction (paragraph 12-7).

2. Indicator light stays on.

STEP 1. Check for defective switch.

Replace switch if defective (paragraph 9-5).

STEP 2. Perform test in accordance with paragraph 12-4.

Replace fire detector wire if alarm circuit does not work (paragraph 12-7).

Replace control box if test of control circuit indicates malfunction (paragraph 12-7).

3. Warning light stays on.

STEP 1. Check for inoperative switch.

Replace switch.

STEP 2. Check for fire detector wire shorted to ground.

Replace fire detector wire.

STEP 3. Check for inoperative control alarm

Replace control.

STEP 4. Check for 1000 OHM resistor open condition.

Replace 1k resistor.

12-4. Testing - Fire Detection System – Engine.

N O T E

If grounding wires have already been installed, procedures of steps a thru a3 are not required. However, they should be inspected and replaced if needed.

a. Locate one of the two mount clamps nearest connector on top side of both engine cowlings and remove the screw, one on each cowling.

a1. Locate the last wire bundle standoff (both sides) on engine firewall and remove the screw on each side.

a2. Locally fabricate two 12 inch long grounding jumpers per TM 55-1500-204-25/1 (use 12 gauge wire such as M22759-2-12-9 NSN 6145-00-990-4856 and crimping terminal lugs such as MS25036-112 NSN 5940-00-143-4794 on each end appropriate to accommodate the removed screw shank size).

a3. Attach grounding jumper to cowling fire detector loop mount clamps and firewall wire bundle standoffs using removed screws (both sides).

a4. Disconnect electrical plug located on main firewall on left side of engine area at station 166.06.

NOTE

Do not depress push-to-test switch in excess of 15 seconds.

b. Locate plug P93 and disconnect. Short receptacle pins “C” and “F” together, turn battery on, depress the push-to-test switch. Fire warning should come on.

N O T E

This test assures the warning test circuit is operational except for the fire detection loops.

c. Remove the jumper wire from pins “C” and use it to short receptacle pin “C” to fire detector outer shield conductor ground. Find a bare spot on the outer conductor harness. Perform this check for both left and right engine cowl fire detection harness. Repeat this procedure using pin “F”.

d. Fire warning light should come ON for both sided. If not, clean and retighten harness ground, (4, figure 12-1). Recheck system for proper ground.

e. Use an multimeter to check conductivity between pins “C” and “F” at plug side of harness.

NOTE

Maximum resistance should not exceed 20 ohms. If higher value registers, check all connectors for tightness.

f. Use a multimeter to check either pin “C” or “F” ground at plug side of harness.

NOTE

Variable factors such as total length of detector cable in the circuit, number of cables and interconnections, condition of aircraft wiring and connector plugs and environmental conditions such as temperature and presence of moisture in connectors or wiring from rain, humidity or aircraft washing make it virtually impossible to establish a standard minimum resistance value to fit all installations. While a clean dry installation may approach the megohm range in some instances, individual circumstances of a particular installation as mentioned above may result in circuit resistance readings considerably lower. In effect, this lower circuit resistance should not normally be of concern unless malfunction of the system has been previously reported. Because of the customary low resistance alarm settings of the Edison system (30 to 2000 ohms) experience has shown that cold engine resistance readings as low as 20 K to 50 K ohms have no detrimental effect on satisfactory operations of the fire detection system and do not necessarily indicate a malfunction situation.

g. In cases where a positive malfunction has been reported (usually due to grounding of the center conductor circuit) a careful check should be made by breaking the system down to sections or individual components to isolate the cause. In such instances trouble shooting individual cable assemblies having center conductor resistance to ground readings of less than 250,000 ohms should be replaced. Edison connectors indicating insulation breakdown (dry) under 600 volts DC hi-pot test should be replaced and, of course, defective connectors or aircraft wiring should be corrected. Generally, a circuit resistance level, characteristic to a particular aircraft installation, will be established by field experience and only in positive cases of malfunction will it be necessary to conduct a sectional system check. A routine system resistance check at the 100 or 250 hour inspection period is recommended.

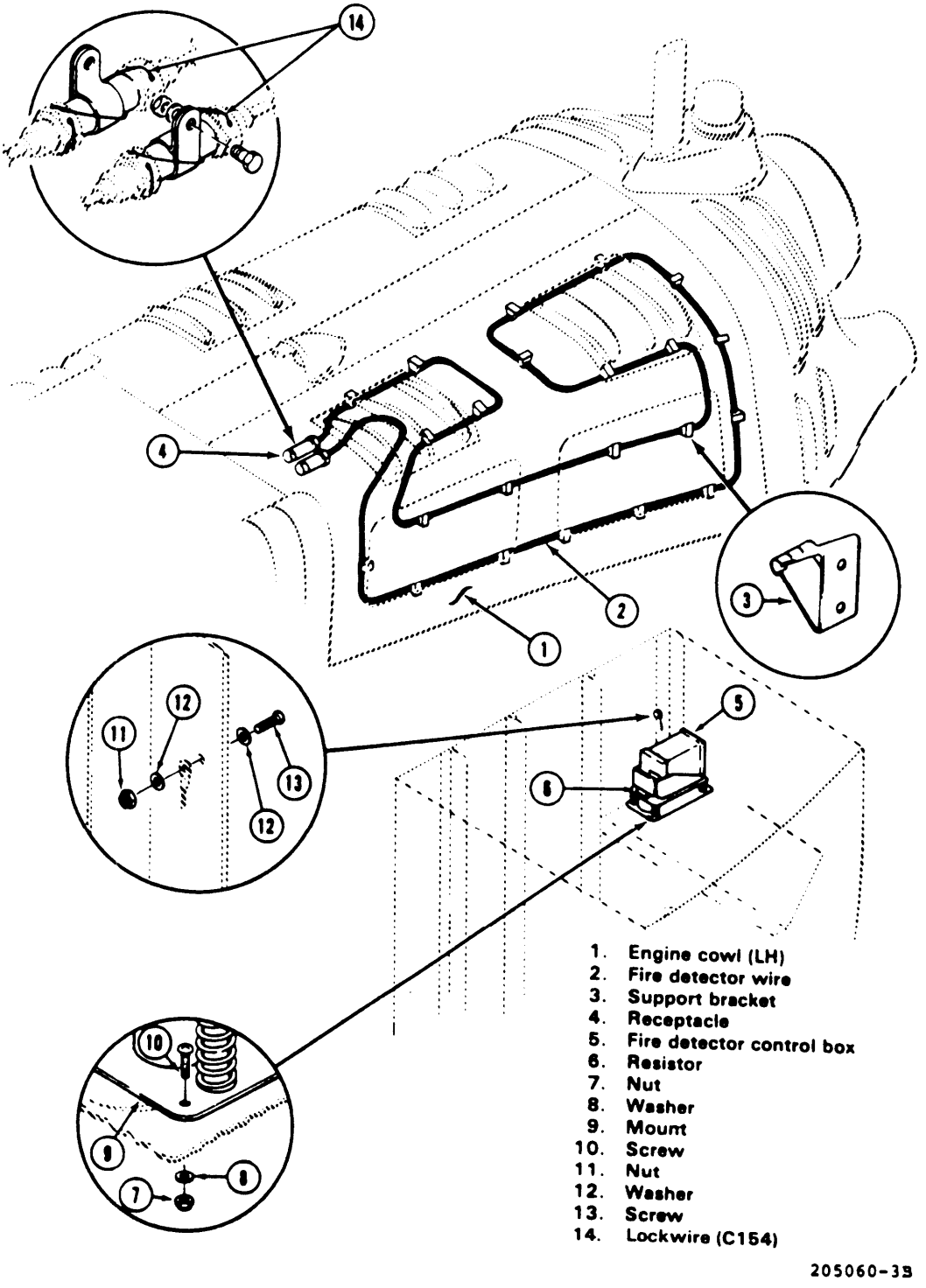

Figure 12-1. Engine Fire Detector

h. Reconnect main firewall plug.

i. Depress Push to-Test switch to assure that system is properly assembled.

j. Remove test equipment and lockwire (C154) all electrical connectors and cannon plugs.

12-5. Removal - Fire Detection on System Engine.

a. Make sure battery switch is in OFF position.

b. Remove lockwire between detector retaining nut and electrical connector. Disconnect electrical wiring from detector wire receptacles and cover wire ends with insulating tape (C275).

c. Remove bolts, washers, and nuts attaching detector wire receptacles to engine cowl.

d. Apply pressure on each side of detector wire retaining clips and remove detector wire from cowl.

e. Remove safety wire from retaining nuts on each end of detector wire receptacles. Remove top nut on each receptacle and remove detector wire ends.

f. Remove fire detector control box located in electrical and radio compartment, station 178.00 on left hand side of helicopter, as follows (figure 12-1):

(1) Disconnect cable connector from the fire detector control box (5).

(2) Remove screw (13), two washers (12), and nut (11) securing ground cable to bulkhead.

(3) Remove four screws (10), four washers (8), and four nuts (7), securing fire detector control box (5) to shelf of electrical and radio compartment.

(4) Remove fire detector control box (5).

12-6. Inspection - Fire Detection System - Engine.

a. Inspect wires for damage and wear.

b. Inspect wire retention dips for cracks and serviceability.

c. Inspect fire detector control box for security of mounting.

12-7. Repair or Replacement - Fire Detection System - Engine.

a. Replace wires if damaged or worn.

b. Replace dips if broken, cracked, or unserviceable.

c. Replace fire detector control box if unserviceable.

12-8. Installation -- Fire Detection System -Engine.

a. Ensure battery switch is in "OFF" position.

b. Insert detector wire ends into receptacle and tighten retaining nuts. Lockwire (CI54) top and bottom retaining nuts together, on each receptacle.

c. Position detector wire receptacles on engine cowl and install attaching nuts, washers, and bolts.

d. Position and route detector wire through spring retention dips.

e. Remove insulating tape from wire ends and connect electrical wiring into the detector receptacles.

f. Lockwire (C154) retaining nuts on receptacles to electrical plugs (figure 12-1).

g. Install fire detector control box in electrical and radio compartment, station 178.00 on left side of helicopter as follows (figure 12-1):

NOTE

Before Installation, check resistor (6) for continuity and security on face of fire detector control box and check that only the special pert shown in the parts manual Is installed.

(1) Secure fire detector control box (5) to shelf of electrical and radio compartment using four screws (10), four washer (8), and four nuts (7).

(2) Attach ground cable to bulkhead with screw (13), two washers (12), and nut (11).

(3) Connect electrical connector to fire detector control box (5).

h. Test fire detector system (paragraph 12-4).

SECTION II. WINDSHILD WIPER SYSTEM

12-9. WINDSHIELD WIPER.

12-10. Description - Windshield Wiper. The windshield wiper assembly consist of the arm and wiper, motor converter, and motor. Helicopters are equipped with a windshield wiper for both pilot and copilot Circuit breakers in the overhead console panel protect these installations in case of malfunction. A five position rotary switch on the miscellaneous panel of the overhead console permits operation of the wipers at low, medium or high

speed. A selector switch permits operation of pilot and copilot windshield wipers separately or simultaneously. The left and right assemblies are identical and all maintenance procedures are applicable to each.

12-11. Troubleshooting -Windshield Wiper. Table 12-2 and Table 12-3 provides a guide to aid in isolating troubles which may be encountered during testing of the units.

Table 12-2. Troubleshooting - Electric Motor Assembly

CONDITION
TEST OR INSPECTION
CORRECTIVE ACTION

1. Motor fails to start.
   STEP 1. Check for defective power source.
   Repair or replace power source (paragraph 9-280).

   STEP 2. Check for defective thermoprotector.
   Replace thermoprotector (paragraph 12-13 and 12-17).

   STEP 3. Check for defective field or armature circuit.
   Repair motor assembly (paragraph 12-13 thru 12-19).

2. Motor assembly has excessive vibration/noise.
   Check for defective motor assembly components.
   Repair motor assembly (paragraph 12-13 thru 12-19).

3. Thermoprotector fails to deenergize motor assembly.
   Check for defective thermoprotector.
   Replace defective thermoprotector (paragraph 12-13 and 12-17).

4. Thermoprotector deenergizes motor assembly but fails to complete cycle.
   Check for defective thermoprotector.
   Replace defective thermoprotector (paragraph 12-13 and 12-17).

5. Excessive current consumption when motor operates under load and fails to reach minimum speed.
   STEP 1. Check for good brush contact.
   Replace brush holder if spring tension is below tolerance (paragraph 12-13 and 12-17).

Table 12-2. Troubleshooting – Electric Motor Assembly (Cont)

CONDITION

TEST OR INSPECTION

CORRECTIVE ACTION

STEP 2. Check for worn brushes.

Replace brush and clip assemblies (paragraph 12-13 and 12-17).

STEP 3. Check for dirty commutator.

Clean commutator (paragraph 12-14).

STEP 4. Check for field strength below normal.

See Corrective Action Steps for 1, 2, 3.

STEP 5. Check for shorted commutator segments.

Repair motor (paragraph 12-13 thru 12-19).

STEP 6. Check for shorts in rotor windings.

Repair motor (paragraph 12-13 thru 12-19).

6. Motor fails to stop in PARK position.

STEP 1. Check for defective parking switch.

Replace parking switch (paragraph 12-13 and 12-17).

STEP 2. Check for defective cam assembly.

Replace cam assembly (paragraph 12-13 and 12-17).

STEP 3. Check for idler gear assemblies not secure on pinions.

Replace gear assemblies (paragraph 12-13 and 12-17).

Table 12-3. Troubleshooting — Converter Assembly

CONDITION

TEST OR INSPECTION

CORRECTIVE ACTION

1 Apparent grease leakage after run-in.

STEP 1. Check for proper sealing of cover plates.

Reseal plates to worm and housing assembly (paragraph 12-17).

Table 12-3. Troubleshooting – Converter Assembly (Cont)

CONDITION TEST OR INSPECTION	**CORRECTIVE ACTION**
STEP 2. Check for crack in housing assembly.	**Replace worm gear and housing assembly (paragraph 12-13 thru 12-19).**
STEP 3. Check for defective preformed packing.	**Replace preformed packing at wiper shaft (paragraph 12-13 and 12-17).**
2. Wiper stroke not within limits.	
Check for defective eccentric.	**Replace linkage assembly (paragraph 12-13 thru 12-19).**
3. Wiper does not stop at PARK position.	
STEP 1. Check for defective parking switch.	**Refer to table 12-2, item 6.**
STEP 2. Check for proper motor and motor converter alignment.	**Align or replace as required (paragraph 12-18).**
STEP 3. Check for defective or worn parts in converter assembly.	**Replace worm parts as required (paragraph 12-13 thru 12-19).**

12-12. Removal — Windshield Wiper.

CAUTION

Do not operate wiper on dry windshields. Install 3/32 inch cotter key in standoff holes at base of arm before operating or performing maintenance.

a. Disconnect battery.

b. Remove windshield wiper blade and universal arm from motor shaft (26), figure 12-2, by removing bolt (1), washer (2) and allen head screw (25).

c. Disconnect electrical connector and remove bolts attaching head guard bracket and windshield wiper support to cabin. Lift brackets and motor converter from cabin.

d. Remove four nuts, washers, and bolts which attach motor-converter to bracket support.

12-13. Disassembly — Windshield Wiper.

a. Separate motor and converter (detail A, figure 12-2).

(1) Cut lockwire and remove three screws (14 and 16) and lockwashers (15). Remove bracket (17).

(2) Remove screw (19) to free lock plate (18).

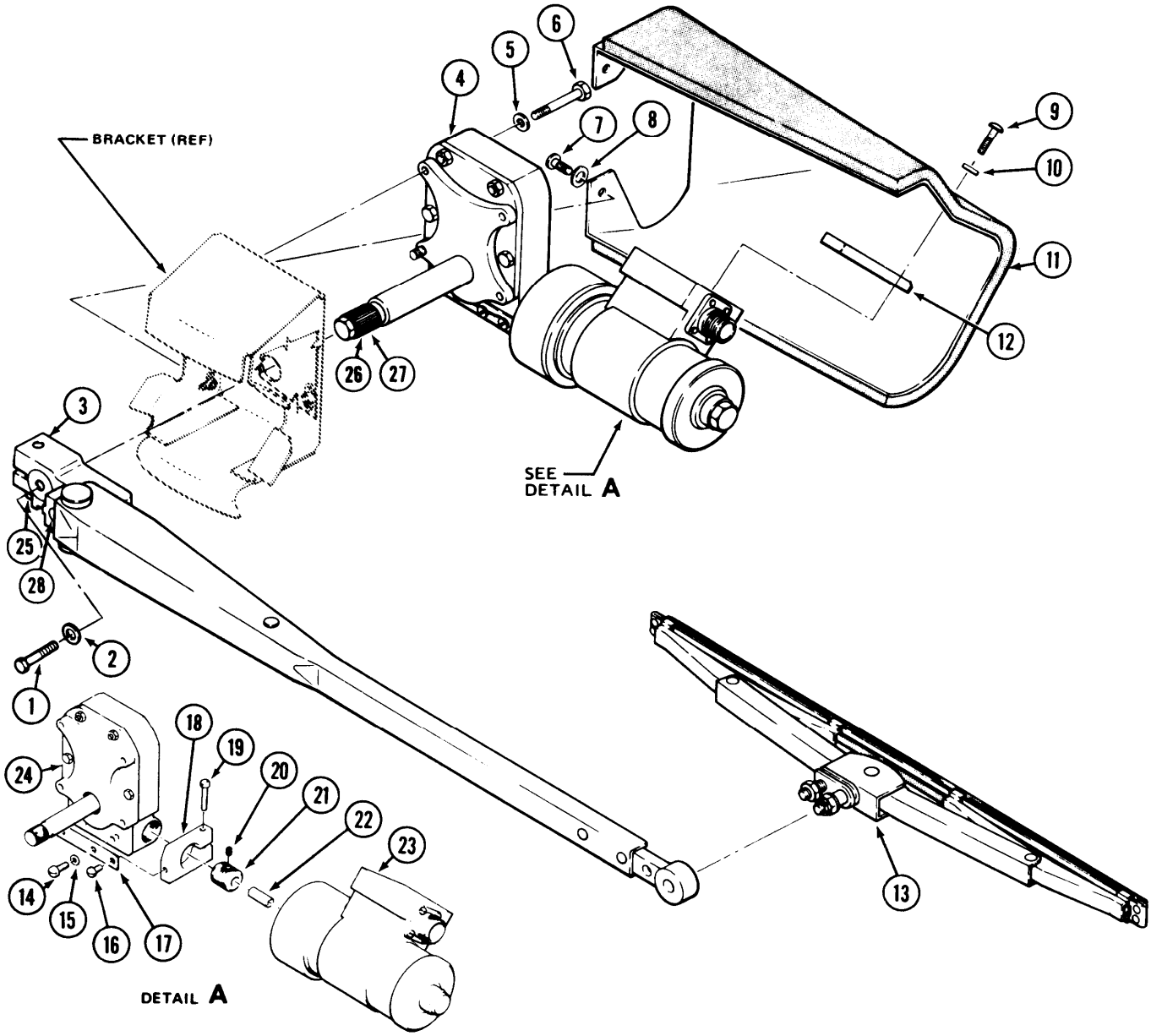

1. Bolt
2, Washer
3. Wiper arm
4. Motor and converter assemblv
5. Washer
6. Bolt
7. Screw
8. Washer
9. Screw
10. Washer
11. Headguard
12. Spacer
13. Wiper blade
14. Screw
15. Washer
16. Screw
17. Bracket
18. Lock plate
19. Screw
20. Lock insert
21. Nipple
22. Coupling
23. Motor assembly
24. Converter assembly
25. Allen Head
26. Motor shaft
27. Sleeve serrated
28. Adjustment screw

Figure 12-2. Windshield Wiper Installation

(3) Remove three gear case mounting screws (10, figure 12-4).

(4) Separate converter (24, figure 12-2) from electric motor (23).

(5) Unscrew motor gear case (11, figure 12-4) from converter assembly (24, figure 12-2).

(6) Remove nipple (21) and coupling (22). Remove lock insert (20) and separate nipple and coupling.

b. Converter Assembly.

(1) Remove retaining ring (17) from linkage shaft.

CAUTION

Insert screwdriver in slots to separate cover plate from housing.

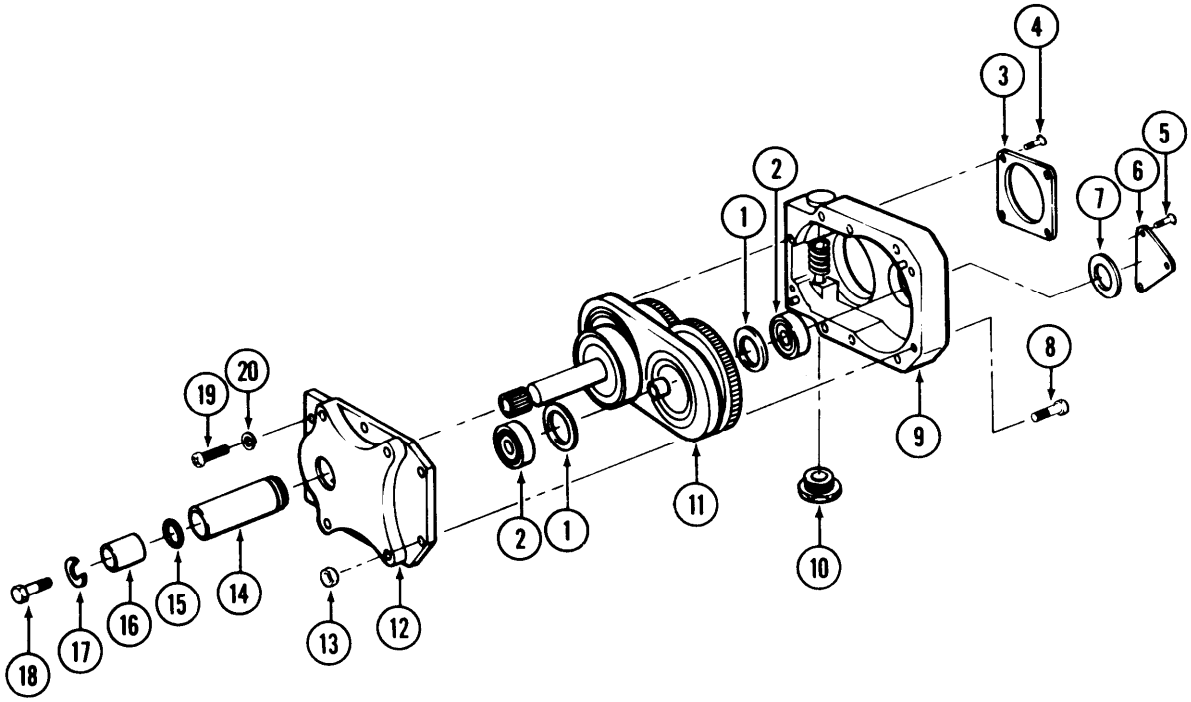

1. Washer
2. Annular ball bearing
3. Nameplate
4. Screw
5. Screw
6. Idler cover plate
7. Washer
8. Screw
9. Worm gear and housing assembly
10. Worm end cap
11. Converter linkage assembly
12. Cover plate
13. Nut
14. Sleeve
15. Preformed packing
16. Sleeve
17. Retaining ring
18. Bolt
19. Screw
20. Washer

Figure 12-3. Converter Assembly

(2) Remove four nuts (13) and screws (8). Separate cover plate (12) from worm gear and housing assembly (9).

(3) Remove sleeve (16) and packing (15) from inside of sleeve (14)

NOTE

Do not remove sleeve (14) from cover plate (12) unless sleeve is damaged and must be replaced. The sleeve is staked in place and damage may result during removal.

(4) Using bearing puller, if necessary, remove bearings (2) and washers (1) from linkage assembly (11).

NOTE

Do not attempt to remove worm gear from housing.

(5) Remove three screws (5); remove idler cover plate (6) and washer (7).

NOTE

Washer (7) may be struck to cover plate by sealing compound. Remove washer by carefully separating with a sharp knife.

(6) Remove four screws (4); remove converter nameplate (3).

c. Electric Motor Assembly.

(1) Cut lockwire and remove end cap (31, figure 12-4).

(2) Cut lockwire and remove three screws (10) securing gear case (11) to end bell and idler shaft assembly (18).

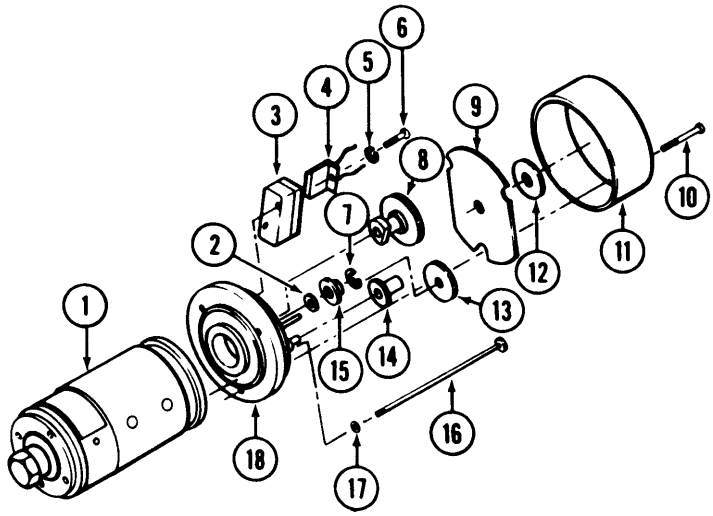

1. Barrel assembly
2. Washer
3. Parking switch
4. Filter
5. Lockwasher
6. Screw
7. Retaining ring
8. Cam assembly
9. Insulator
10. Screw
11. Gear case
12. Washer
13. Idler gear assembly
14. Idler gear assembly
15. Idler gear assembly
16. Tie bolt
17. Lock washer
18. End bell and idler shaft assembly

Figure 12-4. Motor Assembly (Sheet 1 of 2)

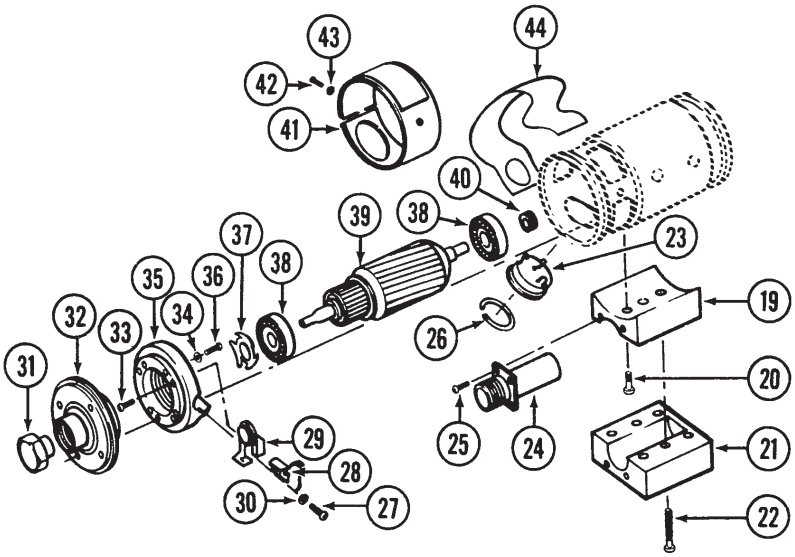

19.	Base	32.	Brush holder end bell assembly
20.	Screw	33.	Screw
21.	Sub-base	34.	Lockwasher
22.	Screw	35.	Brush holder ring
23.	Thermoprotector	36.	Screw
24.	Filter connector	37.	Spring washer
25.	Screw	38.	Annular ball bearing
26.	Retaining ring	39.	Rotor assembly
27.	Screw	40.	Driveshaft gear
28.	Brush and clip assembly	41.	Cover and nameplate assembly
29.	Brush holder assembly	42.	Screw
30.	Lockwasher	43.	Lockwasher
31.	End cap	44.	Brush cover insulation

Figure 12-4. Motor Assembly (Sheet 2 of 2)

(3) Remove insulator (9) and washer (12) if installed, only if worn or damaged. The insulator is secured with sealing compound and the washer is staked in place.

(4) Remove cam assembly (8), idler gear assemblies (13 and 14).

(5) Remove retaining ring (7), idler gear assembly (15), and washer (2).

(6) Remove two screws (6) and lockwashers (5); remove filter (4) and parking switch (3).

NOTE

When removing electrical components, unsolder electrical leads when necessary. Identify leads to ensure proper connection during reassembly.

(7) Remove three screws (42) and lockwashers (43); remove cover and nameplate assembly (41). Remove insulation (44) and retaining ring (26).

(8) Lift brushes out of brush holder assemblies (29).

(9) Remove two tie bolts (16) and lockwashers (17).

(10) Remove end bell and idler shaft assembly (18).

(11) Remove rotor assembly (39), bearings (38) and driveshaft gear (40) as an assembly. Disassemble only if parts are damaged or worn. Remove spring washer (37).

(12) Cut lockwire and remove four screws (25) securing filter-connector (24) in base assembly. Remove two screws (22); remove sub-base (21). Unsolder wires and remove filter-connector.

(13) Remove two screws (27) and lockwashers (30); remove brush and clip assemblies (28).

(14) Unsolder wires and remove brush holder end bell assembly items (29, 32, 33, 34, 35, 36).

(15) Remove two screws (36) and lockwashers (34); remove end bell assembly (32).

(16) Remove four screws (33); remove two brush holder assemblies (29).

(17) Remove thermoprotector (23).

(18) Remove two screws (20); remove base (19).

12-14. Cleaning – Windshield Wiper Assembly.

WARNING

Cleaning materials are flammable and toxic. Avoid skin contact and breathing of solvent vapors.

a. Electric Motor Assembly.

(1) Clean all metal parts with the exception of the rotor assembly (39, figure 12-4), brush and clip assemblies (28) and barrel assembly (1) with cleaning solvent (C261).

(2) Carefully dry with compressed air or clean lint-free cloth.

(3) Rotor assembly (39), particularly the commutator, should be cleaned with a dry brush. The commutator should be wiped clean to remove any film deposit.

b. Converter Assembly.

CAUTION

Do not clean bearings with cleaning solvent.

(1) Wash all metal parts, with the exception of bearings (2, figure 12-3), with cleaning solvent (C261).

(2) Dry with compressed air or clean lint-free cloth.

12-15. Inspection — Windshield Wiper. a. General Inspection. Make a careful visual inspection of all parts to determine obvious defects or damage. Pay particular attention to the condition of threads on all bolts and nuts. Check for nicks, burrs, dents, and other deformations which may interfere with proper operation. Minimum or maximum measurement limits which determine replacement requirements are given in table 12-4.

b. Converter Assembly. Perform inspection of the converter assembly parts as follows (figure 12-3):

(1) Visually inspect all parts for obvious defects or excessive wear.

(2) Check worm gear and housing assembly (9) and cover plate (12) for cracks.

(3) Check condition of all parts of the converter linkage assembly (11). Replace assembly if any of the following conditions are apparent; serrations on wiper shaft are stripped; gear teeth are chipped, broken, or show signs of excessive wear; linkage is distorted; bearings are rough. (Table 12-4.)

(4) Check that bearings are free running.

(5) Check worm gear in worm and housing assembly (9) for free movement.

N O T E

If worm gear is found to be defective or worn, replace worm gear and housing assembly (9) which will contain new worm gear.

218-260 0 - 88 - 16

Table 12-4. Inspection Limits — Windshield Wiper

ITEM NO.	FIGURE NO.	DESCRIPTION	MAX	MIN	REMEDY
18	12-4	Bearing bore	0.8665 inch	—	Replace end bell and idler shaft assembly if bearing bore exceeds dimension.
32	12-4	Bearing bore	0.8665 inch	–	Replace end bell assembly if bearing bore exceeds dimension.
39	12-4	Shaft diameter	—	0.2754 inch	Replace rotor assembly if shaft diameter is less than dimension.
39	12-4	Commutator diameter (Make sure surfaces are smooth and clean.)	—	0.869 inch	Replace rotor assembly if commutator diameter is less than indicated.
28	12-4	Brush length	—	5/32 inch	Replace brush and clip assembly if worn beyond dimension.
29	12-4	Brush spring compression	—	1 in. -lb.	Replace brush holder assembly if spring pressure is less than indicated.
24	12-2	Converter-backlash (At wiper shaft)	5 degrees	—	Replace converter linkage assembly (11, figure 12-3), if backlash is greater than indicated.

c. Electric Motor Assembly. Perform inspection of the electric motor assembly parts as follows: (Figure 12-4.)

(1) Visually inspect all parts for obvious defects or excessive wear. Particular attention should be given to gear and pinion teeth, gear posts and bores.

(2) Check that bearings are free running. Bearing fits should be snug but not tight at room temperature. (Table 12-4.)

(3) Check windings on rotor assembly and stator windings of barrel assembly (1) for broken leads and frayed insulation.

(4) Check commutator for excess wear and make sure surfaces are smooth and clean. (Table 12-4.)

(5) Check brushes on brush and clip assemblies (28) and discard if excessively worn. Check brush holder assembly (29) spring pressure which should be adequate for positive contact. (Table 12-4.)

(6) Check parking switch (3) by pressing in and releasing the switch actuating plunger. Switch action should be positive acting and a distinct “click” should be audible each time the plunger is pressed in or released. Reject switch if switch action is slow or terminals are loose, or if switch plunger is sufficiently worn to prevent positive contact with cam assembly (8).

12-16. Repair or Replacement - Windshield Wiper.

a. Converter Assembly. Repair or replace parts of the converter assembly as follows:

(1) Discard preformed packing (15, figure 12-3 and replace during reassembly.

(2) Make minor repairs as necessary to correct minor defects. Replace defective or worn parts during reassembly.

b. Electric Motor Assembly. Repair or replace parts of the electric motor assembly as follows (see figure 12-4 and table 12-4 for Inspection Limits):

(1) Resolder loose connections where necessary.

(2) Make minor repairs where practical, such as removing nicks and burrs, unless specific instructions are given. Replace all damaged, worn, or otherwise defective parts during reassembly.

12-17. Assembly - Windshield Wiper.

a. Converter Assembly. To assemble the converter assembly, refer to figure 12-3 and proceed as follows:

(1) Position converter nameplate (3) on worm and housing assembly (9); secure with four screws (4). Stake screws.

NOTE

Apply sealing compound (C-242) to all mating surfaces of nameplate (3) and idler cover plate (6) during reassembly.

(2) Position idler coverplate (6) on housing and secure with three screws (5). Stake screws.

(3) Position washer (7) in bearing bore against idler cover plate (6).

(4) Install washers (1) and bearings (2) on linkage assembly (11).

(5) Apply grease (C122) to housing and linkage assembly.

(6) Install linkage assembly (11) in housing with the wiper shaft eccentric positioned to the side as shown in figure 12-5.

(7) If removed during disassembly, install sleeve (14) in cover plate (12). Stake sleeve (four places) to inside of cover plate.

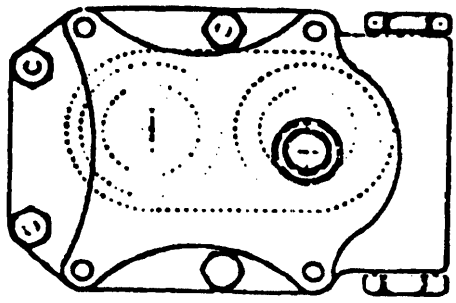

ASSEMBLE LINKAGE WITH WIPER SHAFT ECCENTRIC POSITIONED TO THE SIDE AS SHOWN

Figure 12-5. Positioning of Wiper Shaft

(8) Install packing (15) and sleeve (16) inside of sleeve (14). Stake sleeve (16) in place.

(9) Clean all mating surfaces of worm gear and housing assembly (9) and cover plate (12).

(10) Apply sealing compound (C242) to all mating surfaces of cover plate (12) and worm gear and housing assembly (9). Position cover plate on housing and secure with four screws (8) and nuts (13).

(11) Install bolt (18) and retaining ring (17) on linkage shaft.

(12) Test converter assembly in accordance with paragraph 12-19.

b. Electric Motor Assembly. To assemble the electric motor assembly, see figure 12-4 and proceed as follows:

NOTE

Refer to figure 12-6 for motor assembly schematic diagram.

(1) Position base (19, figure 12-4) on barrel assembly (1) and secure with two screws (20).

(2) Install thermoprotector (23). Soft solder electrical leads to thermoprotector.

(3) Position two brush holder assemblies (29) on brush holder ring (35) and secure with four screws (33).

(4) Position brush holder rings (35) on end bell assembly (32) and secure with two screws (36) and lockwashers (34).

(5) Position brush holder end bell assembly on barrel assembly (1). Ensure locating pins are properly seated. Soft solder electrical leads to brush holder bases.

(6) Soft solder electrical leads to filter-connector (24). Install sub-base (21) on base and secure with two screws (22). Stake screws.

(7) Seat filter-connector in base cavity and secure with four screws (25). Secure screws with lockwire (C155).

NOTE

Driveshaft gear must be pressed onto rotor shaft with the inside diameter chamfered end leading.

(8) If previously disassembled, install bearings (38) and driveshaft gear (40) on rotor assembly (39). Outer face of driveshaft gear must be **0.1 50±0.002** from surface of end bell and idler shaft assembly (18) when rotor is installed.

(9) Position spring washer (37) in bore of end bell assembly (32) with prongs against bearing (38). Carefully install rotor assembly in barrel assembly (1).

(10) Position end bell and idler shaft assembly (18) on barrel assembly (1). Be sure locating pins are properly seated.

(11) Install two tie bolts (16) and lockwashers (17).

(12) Install parking switch (3) and filter (4) and secure with two screws (6) and lockwashers (5). Soft. solder electrical leads to parking switch and filter.

(13) Install washer (2) and idler gear assembly (15). Secure with retaining ring (7).

(14) Install idler gear assemblies (13 and 14) and cam assembly (8). Apply light coat of grease (C125) on all gear shafts, gear teeth, and on cam operating surface.

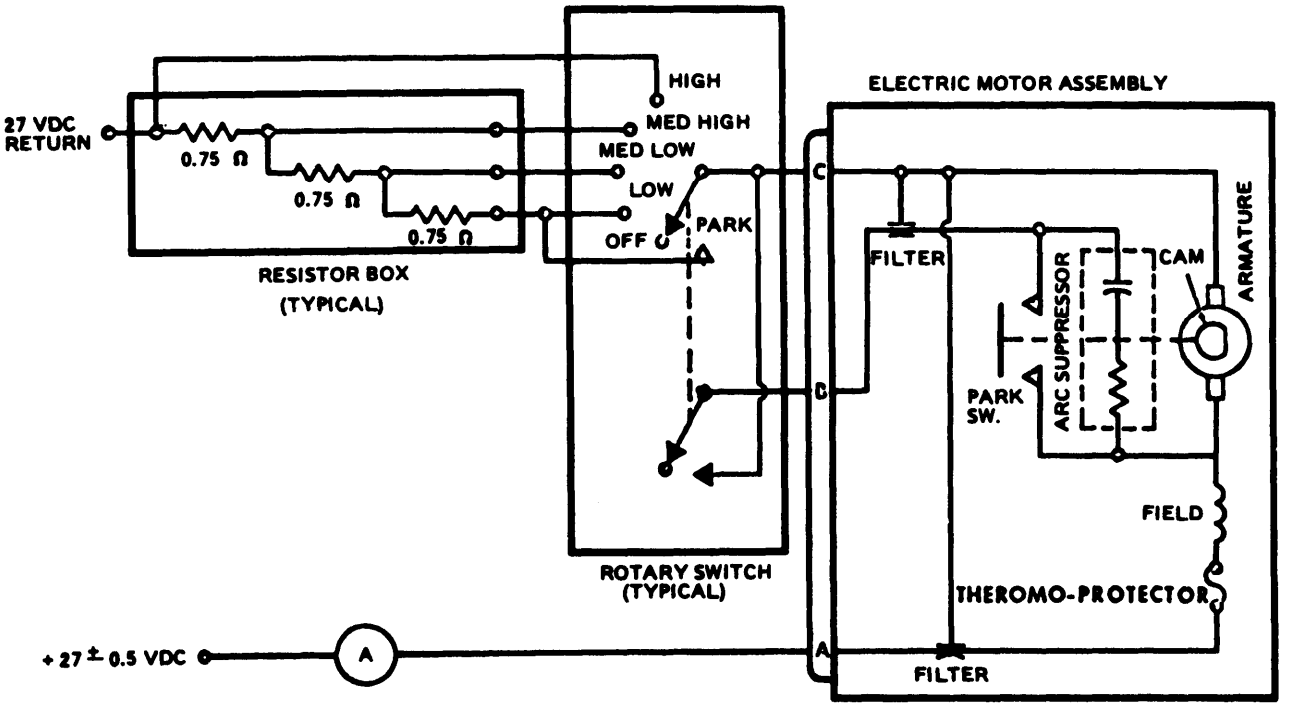

Figure 12-6. Electric Motor Assembly - Schematic Diagram

(15) If removed during disassembly, reinstall washer (12) in gear case (11) and stake in place. Install insulator (9) in gear case and secure with sealing compound (C240).

(16) Install gear case (11) and secure with three screws (10). Do not lockwire screws until final assembly.

(17) Position brush and clip assemblies (28) in brush holders and secure with two screws (27) and lockwashers (30).

(18) Position insulation (44) and cover and nameplate assembly (41) on barrel assembly. Secure with three screws (42) and lockwashers (43).

(19) Install end cap (31). Secure with lockwire (C155).

(20) Test electric motor assembly in accordance with paragraph 12-19.

12-18. Final Assembly — Windshield Wiper. The motor and converter assembly may be assembled in either the left or right configuration. Figure 12-7 illustrates both configurations and depicts the proper angular orientation of the electric motor assembly in respect to the converter assembly. Determine the desired configuration, then proceed as follows:

a. If lock inserts (20, figure 12-2) were removed from nipple (21) during disassembly, install new lock inserts (figure 12-2). Install nipple in converter assembly (24).

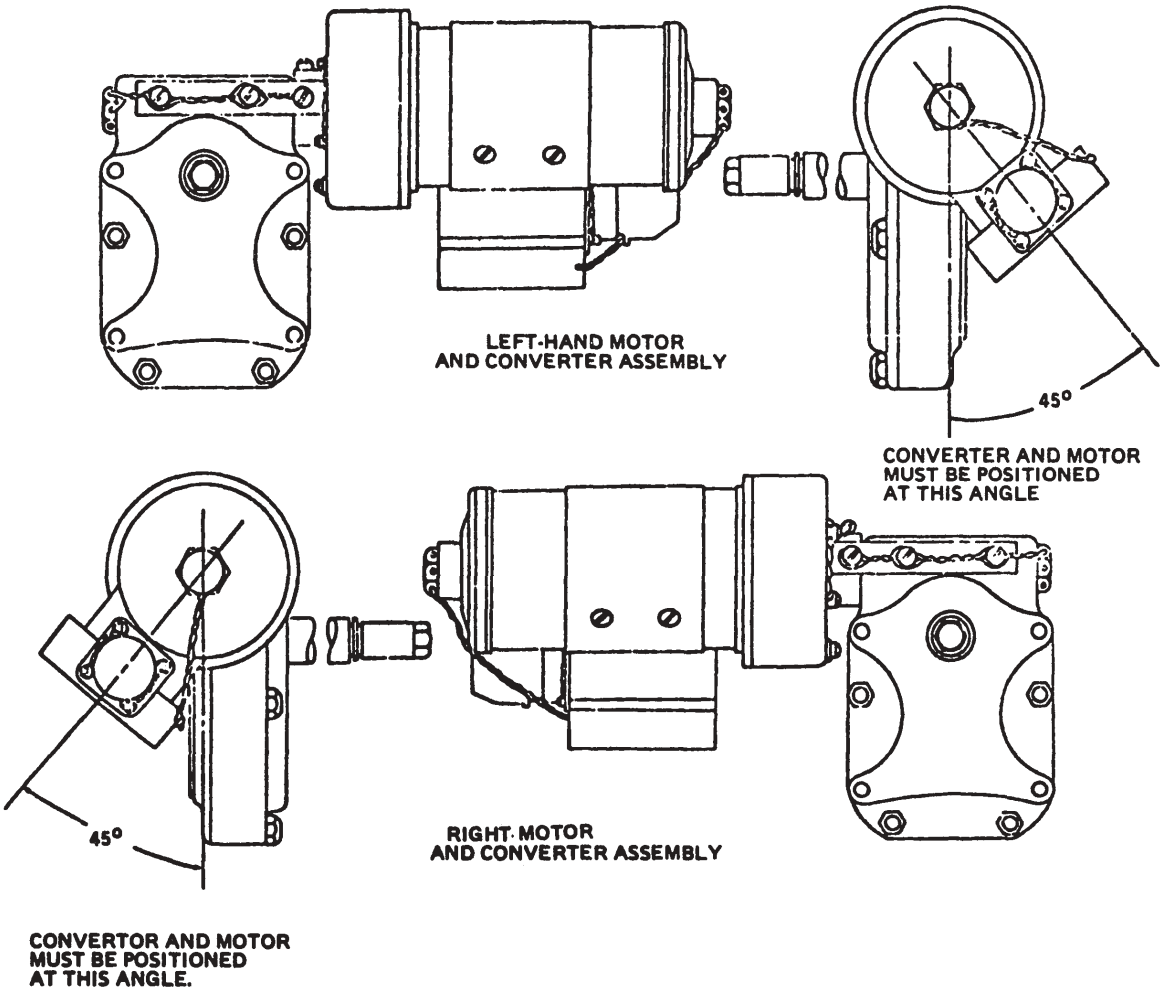

Figure 12-7. Motor and Converter Assembly — Left & Right Configuration

b. Install coupling (22) on converter driveshaft.

c. Remove three screws (10, figure 12-4) securing gear case (11) to electric motor assembly, remove gear case.

d. Position lock plate (18, figure 12-2) on gear case (11, figure 12-4) flange. Screw gear case onto nipple (21, figure 12-2)

e. Install bracket (17) and secure with screws (14 and 16) and washers (15).

f. Remove worn end cap (10, figure 12-3) from converter assembly. Rotate converter driveshaft counterclockwise until the output shaft stops in the park position. After output shaft has stopped, continue rotating driveshaft counterclockwise and count the number of turns necessary before the output shaft reverses its direction of rotation. Divide this number of turns by two, and backup (rotate clockwise) converter driveshaft by that number of turns (i.e., four turns, back up two turns).

N O T E

When setting converter for park there are two (2) places the outputs shaft reverses direction of rotation. These are 64° apart, and park can be set at either location. This depends on whether the electric motor and converter assembly is to be installed on pilot or co-pilot's side.

g. Slide cam assembly (8, figure 12-4) and idler gear assembly (13) just far enough to rotate cam assembly to a position so its flat segment opens parking switch (3). The flat segment of the cam assembly should be placed in a position approximately parallel to the side of the parking switch. Then slide cam assembly (8) and idler gear assembly (13) back to their fully installed position.

h. Position motor assembly on gear case (11). Ensure rotor shaft engages coupling (22, figure 12-2). Install three screws (10, figure 12-4) and secure with lockwire (C155).

i. Position converter assembly and electric motor assembly at 45 degree angle as shown in figure 12-7. Install screw (19, figure 12-2) to tighten lock place (18). Secure screws (19, 14, and 16) with lockwire (C155).

j. Apply light coat of sealing compound (C242) to threads only of worm end cap (10, figure 12-3). Carefully install worm end cap in converter assembly. Sealing compound must not enter bearing in converter assembly. Secure and cap with lockwire (C155).

k. Test final assembly in accordance with paragraph 12-19.

12-19. Testing - Windshield Wiper. To test the complete motor and converter assembly, proceed as follows.

a. Install the motor and converter assembly on the helicopter (paragraph 12-20, and figure 12-2).

b. Install wiper blade.

CAUTION

Do not operate wiper on dry windshields. Install 3/32 inch cotter key in standoff holes at base of arm before operating or performing maintenance.

Testing of the wiper with blade raised clear of windshield should be done in small increments. Do not allow blade to operate fast enough to cause whipping; this can bend wiper arm.

c. Turn rotary switch to any "on" position.

d. Turn rotary switch through OFF to park position long enough for the wiper to travel to the park position and then to off.

e. Repeat three times and observe that wiper blade returns to park position in the same place each time. (Figure 12-8.)

f. Check **5.0 to 5.5** inch distance from top of windshield.

g. Check pressure for **4.50 to 5.0** lbs.

h. Check travel arc for **64** degree movement.

i. Remove 3/32 inch cotter pin from standoff and carefully lower blade onto windshield.

12-20. Installation - Windshield Wiper Assembly (figure 12-2).

a. Position motor-converter in support and install mounting bolts and washers.

b. Place converter shaft through hole in cabin and position head guard, assembly over motorconverter. Align holes in head guard and windshield wiper support with holes in cabin, and install mounting screws, connect electrical connection and lockwire (C154).

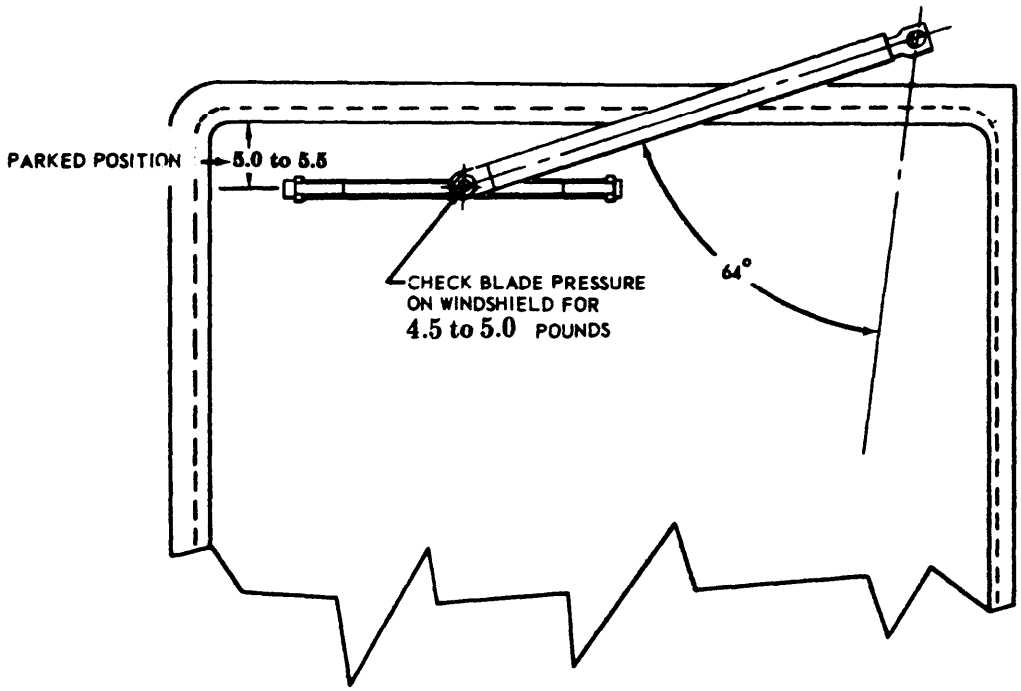

Figure 12-8. Testing Windshield Wiper

c. Operate the motor-converter so that wiper shaft is stopped in the PARK position.

d. Install wiper arm and blade assembly on serrated shaft so that blade will be parallel to and **5.0 to 5.5** inches below the windshield wiper stop, with a slight upward pressure being applied to arm.

e. Tighten allen head screw clamping wiper arm to shaft, install washer and mounting bolt end torque bolt **30 to 40** inch-pounds. Safety wire allen head screw to the mounting bolt.

f. Adjust pressure of blade on windshield to **4.5 to 5.0** pounds measured at intersection of wiper blade and wiper arm using wrench (T64) to adjust screw (28) figure 12-2.

CAUTION

Do not operate wiper on dry windshields. Install 3/32 inch cotter pin in standoff holes at base of arm before operating or performing maintenance.

CAUTION

Testing of the windshield wiper with blade raised clear of windshield should be done in small increments. Do not allow blade to operate fast enough to cause whipping; this can bend wiper arm.

g. Place BAT SWITCH TO ON position. Close PILOT WINDSHIELD WIPER circuit breaker. Operate the wiper through all speeds, and return to the PARK position.

h. Remove 3/32 inch cotter pin from standoff holes and carefully lower blade onto windshield.

SECTION III. REAR VIEW MIRROR

12-21. REAR VIEW MIRROR.

2-22. Description — Rear View Mirror. The helicopter is equipped with an adjustable rear view mirror located outside the forward cabin below the pilots lower window. This mirror, when properly adjusted, enables the pilot to visually check the operation of the external cargo suspension hook. When the helicopter is employed on missions which do not require use of the external cargo suspension, the rear view mirror may be covered or removed and stowed.

12-23. Removal — Rear View Mirror. a. Remove bolts, washers, nuts and/or quick-release pins, which attach braces and supports to structure and remove mirror assembly from helicopter.

b. To remove mirror from brace assembly, remove mirror cover and spring pins from adjustment handles.

12-24. Inspection — Rear View Mirror. a. Inspect mirror for cracks, crazing or hazy (clouded) areas on mirror glass.

b. Inspect mirror frame for security and damage.

c. Inspect braces for damage, dents, cracks, and loose or missing hardware.

d. Inspect all pip pins for positive locking.

12-25. Replacement — Rear View Mirror. If mirror exceeds inspection requirements, replace mirror assembly.

12-26. Installation — Rear View Mirror. a. Install braces and supports to structure, using previously removed bolts, washers, nuts and/or quick-release pins.

b. Position rear view mirror and align mounting holes.

c. Screw adjustment handles through mounting holes. Adjust mirror to desired angle, tighten adjustment handles, and insert spring pins in threaded ends of handles.

d. Slide protective cover over mirror and fasten holding snap.

12-27. Adjustment — Rear View Mirror. a. Remove spring pin and loosen adjustment handles.

b. Manually adjust mirror to desired angle.

c. Tighten adjustment handles and insert spring pins.

CHAPTER 13

ENVIRONMENTAL CONTROL SYSTEM

SECTION 1. HEATING SYSTEM

13-1. BLEED AIR HEATER AND DEFROSTER INSTALLATION.

13-2. Description - Bleed Air Heater and Defroster Installation. On helicopters prior to serial no. 65-9565, the basic helicopter is equipped with a heater-defroster system which uses engine compressor bleed air mixed with ambient air and routed through a distribution system to cabin outlets (figure 13-1, sheet 1 of 3). Temperature of the heated air is controlled to a set temperature automatically by the mixing valve, while the quantity of heated air is pilot controlled by an electrically operated valve in the bleed air line which regulates the amount of bleed air reaching the mixing valve. The distribution system carries heated air from the mixing valve, under the cabin floor on the left hand side to a heat/defog selector valve which enables the pilot to direct air to either heat outlet at the pedestal on the windshield defog nozzles. Two additional outlet positions are provided under the cockpit seats. Air for these outlets is diverted from the main duct by a pilot controlled selector valve which provides control over the quantity of air diverted.

On helicopters serial no. 65-9565 through 66-16867, heating and defrosting is basically the same except the distribution system is under the cabin floor on the right hand side, and the two additional outlet positions are in the door posts (figure 13-1, sheet 2 of 3).

On helicopters subsequent to serial no. 66-16868, heating and defrosting is basically the same except manner in which temperature and quantity of heated air is controlled (figure 13-1, sheet 3 of 3). Control is accomplished by means of a thermostat type valve located in the distribution duct which pneumatically governs the ratio of the quantity of bleed air to ambient air. The thermostat control is located on the right hand door post and linked to the thermostat by a flexible cable.

For cold weather operations, on helicopters serial no. prior to 65-9565, an auxiliary combustion-type heater may be installed in the right hand side of the fuselage, aft of the cargo area. Fuel is pumped from the helicopter fuel tanks through a fuel train assembly installed under the left side of the cabin floor.

On helicopters serial no. subsequent to 65-9565, an exhaust muff heater may be installed, replacing the existing bleed air heater (figures 13-3 and 13-4).

13-3. Troubleshooting — Bleed Air Heater and Defroster Installation.

N O T E

Troubleshoot the applicable bleed air heat system in accordance with the following charts.

N O T E

Before using this table be sure all normal operational checks have been performed. If a malfunction, which is not listed in this table, is found notify depot maintenance.

Table 13-1. Troubleshooting — Air Distribution System
Helicopter serial Nos. 62-12351 through 64-13901

CONDITION

TEST OR INSPECTION

CORRECTIVE ACTION

1. No voltage with circuit breakers closed.

Check for faulty circuit breaker.

Replace circuit breaker if defective (paragraph 9-12).

2. Circuit breaker trips.

STEP 1. Check for faulty electrical circuits.

Repair damaged circuit (Appendix F).

STEP 2. Check for faulty circuit breaker.

Replace circuit breaker if defective (paragraph 9-12).

3. H/DEFOG valve does not operate.

STEP 1. Check for faulty switch.

Replace switch if defective (paragraph 9-5).

STEP 2. Check for faulty heat/defog valve.

Replace valve if defective (paragraph 13-7).

STEP 3. Check for faulty circuit.

Repair damaged circuit (Appendix F).

4. Unable to turn heater on or off.

STEP 1. Check for faulty circuits.

Repair damaged circuit (Appendix F).

STEP 2. Check for faulty bleed air valve.

Replace bleed air valve if defective (paragraph 13-7).

5. No control of amount of bleed air. Inadvertent shutoff of air.

STEP 1. Check for faulty switch.

Replace switch if defective (paragraph 9-5).

Table 13-1. Troubleshooting — Air Distribution System (Cont)

CONDITION

TEST OR INSPECTION

CORRECTIVE ACTION

STEP 2. Check for faulty circuit.

Repair damaged circuit (Appendix F).

STEP 3. Deleted.

STEP 4. Check for faulty butterfly valve.

Replace butterfly valve if defective (paragraph 13-7).

6. Defog selector valve does not operate.

Check for bent or broken selector lever.

Repair or replace selector lever (paragraph 13-7).

7. Selector valve does not close when selector lever is in DEFOG position.

STEP 1. Check for faulty microswitch on selector linkage.

Replace microswitch if defective (paragraph 9-5).

STEP 2. Check for faulty selector valve.

Replace selector valve if defective (paragraph 13-7).

STEP 3. Check for faulty outlet valve.

Replace outlet valve if defective (paragraph 13-7).

STEP 4. Check for damaged or unadjusted linkage.

Repair or adjust linkage (paragraph 13-7).

8. Doorpost and aft outlet valves do not turn off when selector is in COMB HTR DEFOG position (applicable only when auxiliary combustion heater is installed).

STEP 1. Check for faulty microswitch on selector linkage.

Replace microswitch if defective (paragraph 9-5).

STEP 2. Check for faulty door post air valve.

Replace door post air valve if defective (paragraph 13-7).

Table 13-1. Troubleshooting — Air Distribution System (Cont)

CONDITION	TEST OR INSPECTION	CORRECTIVE ACTION
	STEP 3. Check for faulty outlet valve.	**Replace outlet valve if defective (paragraph 13-7).**
	STEP 4. Check for damaged or unadjusted linkage.	**Repair or adjust linkage (paragraph 13-7).**
9. No air flow.		
	STEP 1. Check for faulty electrical circuits.	**Repair damaged electrical circuit (Appendix F).**
	STEP 2. Check for obstructed bleed air line.	**Clean or replace bleed air line (paragraph 13-7).**
	STEP 3. Check for faulty bleed air switch.	**Replace bleed air switch if defective (paragraph 9-5).**
	STEP 4. Check for faulty bleed air valve.	**Replace bleed air valve if defective (paragraph 13-7).**
	STEP 5. Check for faulty mixing valve.	**Replace mixing valve if defective (paragraph 13-7).**
Helicopters Serial No. 65-9811 and subsequent		
1. No voltage with circuit breakers closed.		
	Check for faulty circuit breaker.	**Replace circuit breaker if defective (paragraph 9-12).**
2. Circuit breaker trips.		
	STEP 1. Check for faulty electrical circuits.	**Repair electrical circuit if defective (Appendix F).**

Table 13-1. Troubleshooting – Air Distribution System (Cont)

CONDITION

TEST OR INSPECTION

CORRECTIVE ACTION

STEP 2. Check for faulty circuit breaker.

Replace circuit breaker if defective (paragraph 9-12).

3. Heater will not turn on.

STEP 1. Check for faulty electrical circuits.

Repair electrical circuit if defective (Appendix F).

STEP 2. Check for faulty bleed air switch.

Replace switch if defective (paragraph 9-5).

STEP 3. Check for faulty overheat relay.

Replace overheat relay if defective (paragraph 9-5).

STEP 4. Check for faulty overheat switch.

Replace overheat switch if defective (paragraph 9-5).

STEP 5. Check for faulty bleed air valve.

Replace bleed air valve if defective (paragraph 13-7).

4. Bleed air valve opens when switch is in OFF position and closes when switch is in ON position.

Check for faulty circuit.

Repair circuit if defective (Appendix F).

5. No air flow.

STEP 1. Check for faulty bleed air valve motor.

Replace bleed air valve motor if defective (paragraph 13-7).

STEP 2. Check for faulty electrical circuits.

Repair circuit if defective (Appendix F).

STEP 3. Check for faulty bleed air switch.

Replace bleed air switch if defective (paragraph 9-5).

Table 13-1. Troubleshooting — Air Distribution System (Cont)

CONDITION

TEST OR INSPECTION

CORRECTIVE ACTION

STEP 4. Check for faulty overheat relay.

Replace overheat relay if defective (paragraph 9-5).

6. Bleed air valve will not close.

STEP 1. Check for faulty circuit.

Repair circuit if defective (Appendix F).

STEP 2. Check for faulty bleed air valve motor.

Replace bleed air valve if defective (paragraph 13-7).

STEP 3. Check for faulty bleed air switch.

Replace bleed air switch if defective (paragraph 9-5).

STEP 4. Check for jammed bleed air valve.

Replace valve if defective (paragraph 13-7).

7. Cannot control air flow at door post outlet.

STEP 1. Check for faulty electrical circuit.

Repair circuit if defective (Appendix F).

STEP 2. Check for faulty doorpost outlet switch.

Replace doorpost outlet switch if defective (paragraph 9-5).

STEP 3. Check for faulty doorpost outlet valve.

Replace doorpost outlet valve if defective (paragraph 13-7).

STEP 4. Check for jammed or broken flapper valve.

Repair or replace flapper valve if defective (paragraph 13-7).

STEP 5. Check for faulty actuator valve.

Replace actuator valve if defective (paragraph 13-7).

Table 13-1. Troubleshooting — Air Distribution System (Cont)

CONDITION

TEST OR INSPECTION

CORRECTIVE ACTION

8. Doorpost outlets do not turn OFF when HEAT/DEFOG selector is in DEFOG position.

STEP 1. Check for faulty actuator.

Replace actuator if defective (paragraph 13-7).

STEP 2. Check for faulty microswitch.

Replace microswitch if defective (paragraph 9-5).

9. HEAT/DEFOG selector does not operate.

STEP 1. Check for faulty linkage.

Repair or replace faulty linkage as necessary (paragraph 13-7).

STEP 2. Check for faulty flapper valve.

Replace flapper valve if defective (paragraph 13-7).

10. No air flow with heater turned ON.

STEP 1. Check for faulty bleed air valve.

Replace bleed air valve (paragraph 13-7).

STEP 2. Check for faulty electrical circuits.

Repair defective circuits (Appendix F).

STEP 3. Check for faulty mixing valve.

Replace mixing valve if defective (paragraph 13-7).

STEP 4. Check for loose or obstructed thermostat pneumatic tube.

Repair or replace tube as required (paragraph 13-7).

STEP 5. Check for faulty thermostat.

Replace thermostat if defective (paragraph 13-7).

11. Air to outlets too hot.

STEP 1. Check for faulty mixing valve.

Replace mixing valve if defective (paragraph 13-7).

Table 13-1. Troubleshooting — Air Distribution System (Cont)

CONDITION

TEST OR INSPECTION

CORRECTIVE ACTION

STEP 2. Check for faulty thermostat.

Replace thermostat if defective (paragraph 13-7).

12. Air to outlets too cool.

STEP 1. Check for restricted bleed air line.

Repair bleed air line (paragraph 13-7).

STEP 2. Check for faulty mixing valve.

Replace mixing valve if defective (paragraph 13-7).

13. No air from outlets.

STEP 1. Check for obstructed bleed air line.

Repair line as necessary (paragraph 13-7).

STEP 2. Check for faulty mixing valve.

Replace mixing valve if defective (paragraph 13-7).

14. No heated air at outlets.

Check for disconnected or broken pneumatic line between mixing valve and thermostat.

Repair or replace line as required (paragraph 13-7).

15. Air at outlets not hot with thermostat set above midpoint.

STEP 1. Check for leaking line from mixing valve sensor,

Repair or replace line (paragraph 13-7).

STEP 2. Check for loose thermostat knob.

Tighten knob as required (paragraph 13-7).

STEP 3. Check for faulty thermostat element.

Replace thermostat element if defective (paragraph 13-7).

Table 13-1. Troubleshooting — Air Distribution System (Cont)

CONDITION

TEST OR INSPECTION

CORRECTIVE ACTION

STEP 4. Check for faulty limit switch.

Replace limit switch if defective (paragraph 9-5).

16. Air at outlets full hot with thermostat set below midpoint.

STEP 1. Check for loose thermostat knob.

Tighten knob as required.

STEP 2. Check for faulty thermostat element.

Replace thermostat element if defective (paragraph 13-7).

STEP 3. Check for crimped or obstructed line from mixing valve.

Repair or replace line as necessary (paragraph 13-7).

17. Heater shuts off after a short period.

STEP 1. Check for faulty temperature limit switch.

Replace temperature limit switch if defective (paragraph 9-5).

STEP 2. Check for crimped or obstructed line from mixing valve to sensor.

Repair or replace line (paragraph 13-4).

18. Heater oscillates on and off.

Check for faulty temperature limit switch.

Replace temperature limit switch if defective (paragraph 9-5).

19. Heater will not shut off in overheated condition.

Check for faulty temperature limit switch.

Replace temperature limit switch if defective (paragraph 9-5).

BLEED AIR HEAT SYSTEM

1. Engine Bleed Air Hose
2. Bleed Air Control Valve
3. Air Mixing Valve
4. Noise Suppressors
5. Bleed Air Heat Distribution Valve
6. Under-Seat Registers
7. Windshield Nozzles
8. Heat Selector Valve
9. Lower Window Nozzle
10. Heat Selector Control

AUXILIARY HEATING PROVISIONS:

11. Lower Right Outlet Control
12. Lower Left Outlet Control
13. Iris Valves
14. Auxiliary Heat Duct
15. Thermostat Dial
16. Door Post Outlets
17. Distribution Valve
18. Capped Fuel Line
19. Capped Aft Outlets
20. Spot Heating Connection

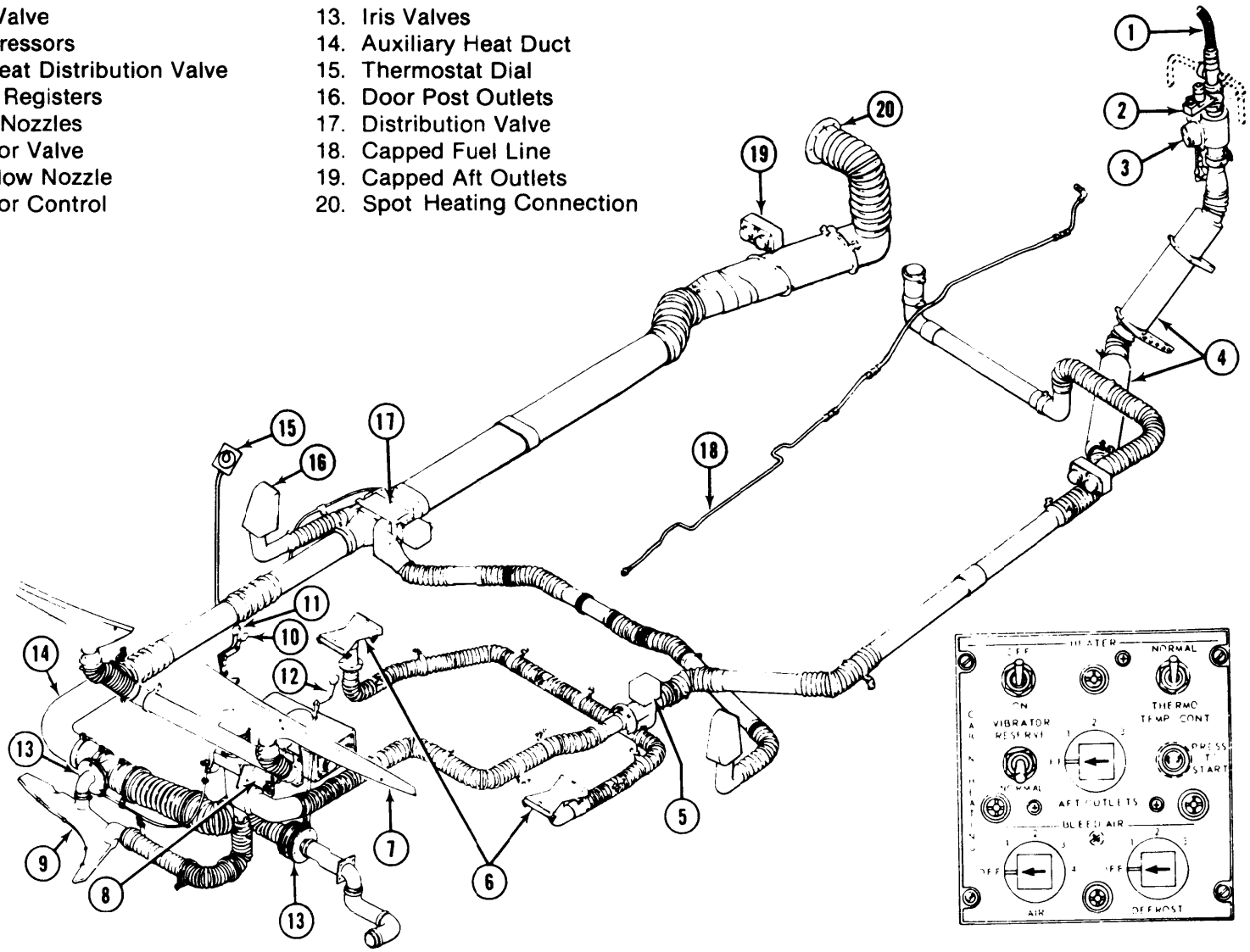

Figure 13-1. Heat-Defrost Air System without Auxiliary Heater (Serial Numbers 62-12351 thru 64-13901) (Sheet 1 of 3)

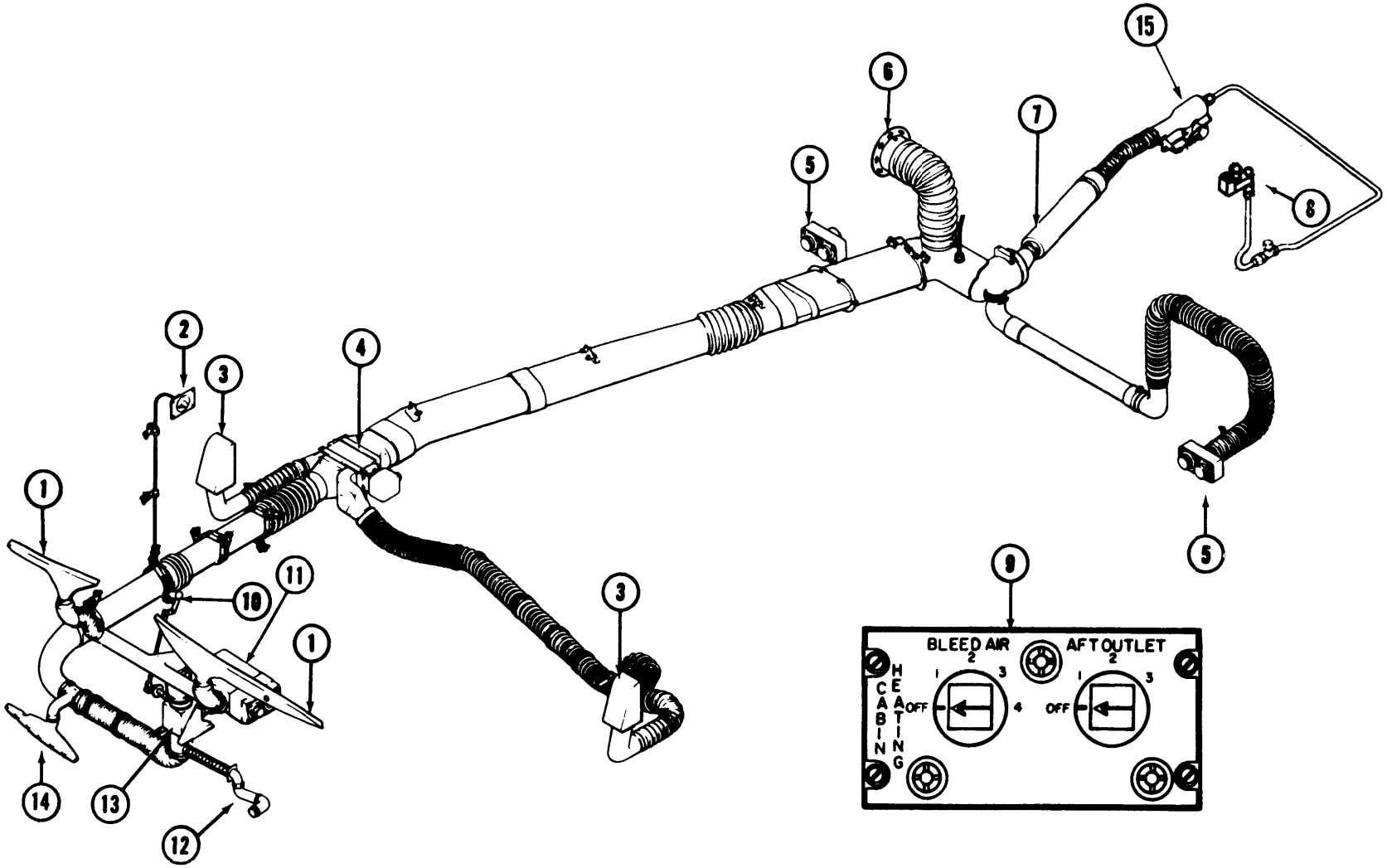

1. Windshield Nozzles
2. Thermostat Dial
3. Door Post Outlets
4. Distribution Valve
5. Aft Heat Outlets
6. Spot Heating Connection
7. Noise Suppressor
8. Bleed Air Control Valve
9. Cabin Heating Panel
10. Air Directing Lever
11. Center Pedestal Outlets
12. Heat Outlet
13. Air Directing Valve
14. Lower Window Nozzle
15. Bleed Air Mixing Valve

Figure 13-1. Heating and Defrosting System (Serial Numbers 65-9565 through 66-16867 (Sheet 2 of 3)

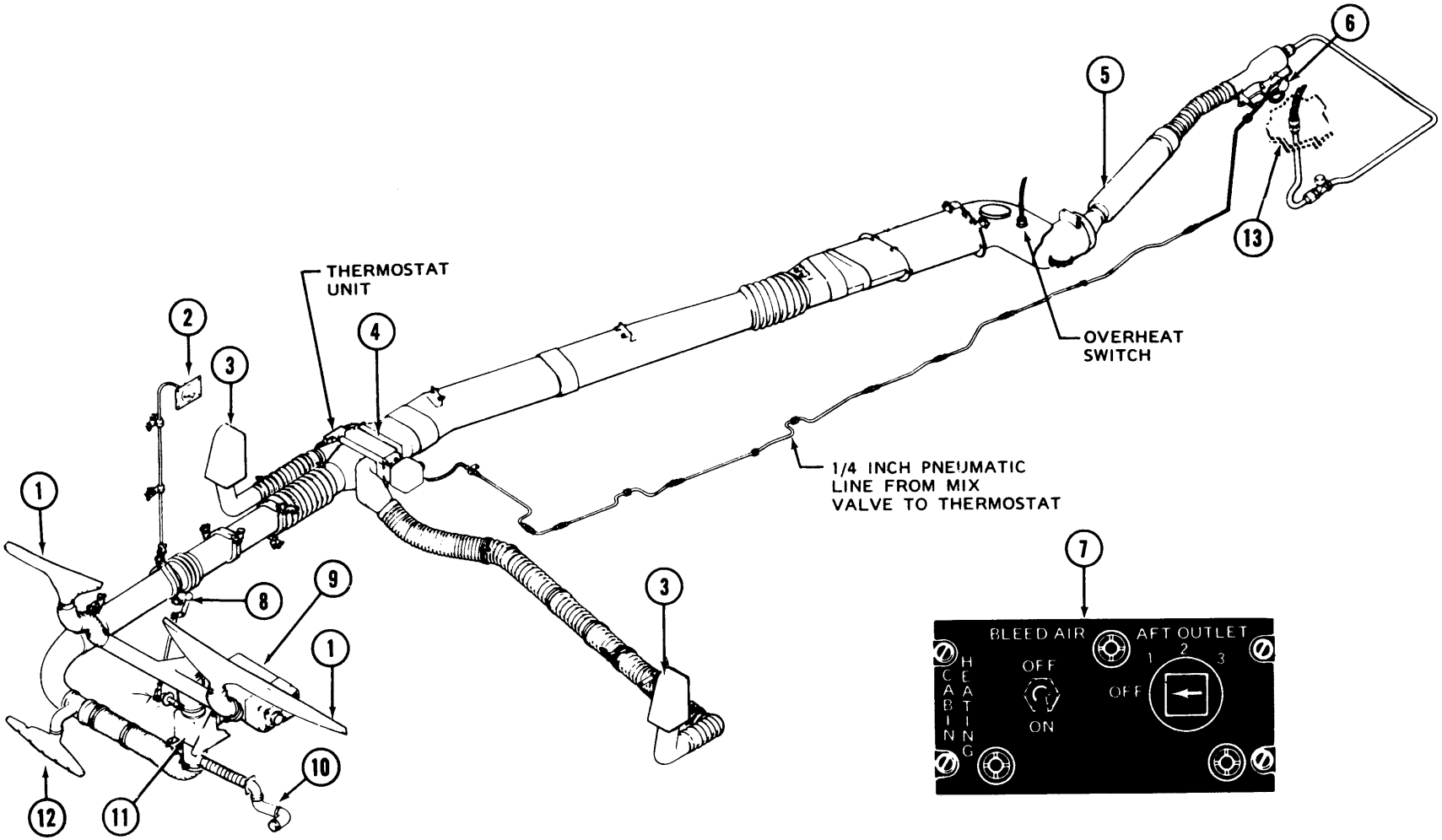

1. Windshield Nozzles
2. Thermostat Dial
3. Door Post Outlets
4. Distribution Valve
5. Noise Suppressor
6. Bleed Air Mixing Valve with shut off solenoid
7. Cabin Heating Panel
8. Defrost Lever
9. Center Pedestal Outlets
10. Heat Outlet
11. Defrost Valve
12. Lower Window Nozzle
13. Engine Compartment Floor

Figure 13-1. Heating and Defrosting System (Serial Numbers 66-16868 and Subsequent) (Sheet 3 of 3)

BLEED AIR HEAT SYSTEM:

1. Engine Bleed Air Hose
2. Bleed Air Control Hose
3. Air Mixing Valve
4. Noise Suppressors
5. Bleed Air Heat Distribution Valve
6. Under-Seat Registers
7. Windshield Nozzles
8. Heat Selector Valve
9. Lower Window Nozzle
10. Heat Selector Control

AUXILIARY HEATING SYSTEM:

11. Lower Right Outlet Control
12. Lower Left Outlet Control
13. Iris Valves
14. Auxiliary Heat Duct
15. Thermostat Dial
16. Door Post Outlets
17. Distribution Valve
18. Thermostat
19. Heater Fuel Train Assembly
20. Fuel Filter
21. Fuel Pump
22. Fuel Solenoid Valve
23. Aft Heat Outlets
24. Spot Heating Connection
25. Aft Outlets Valve
26. Auxiliary Combustion Heater

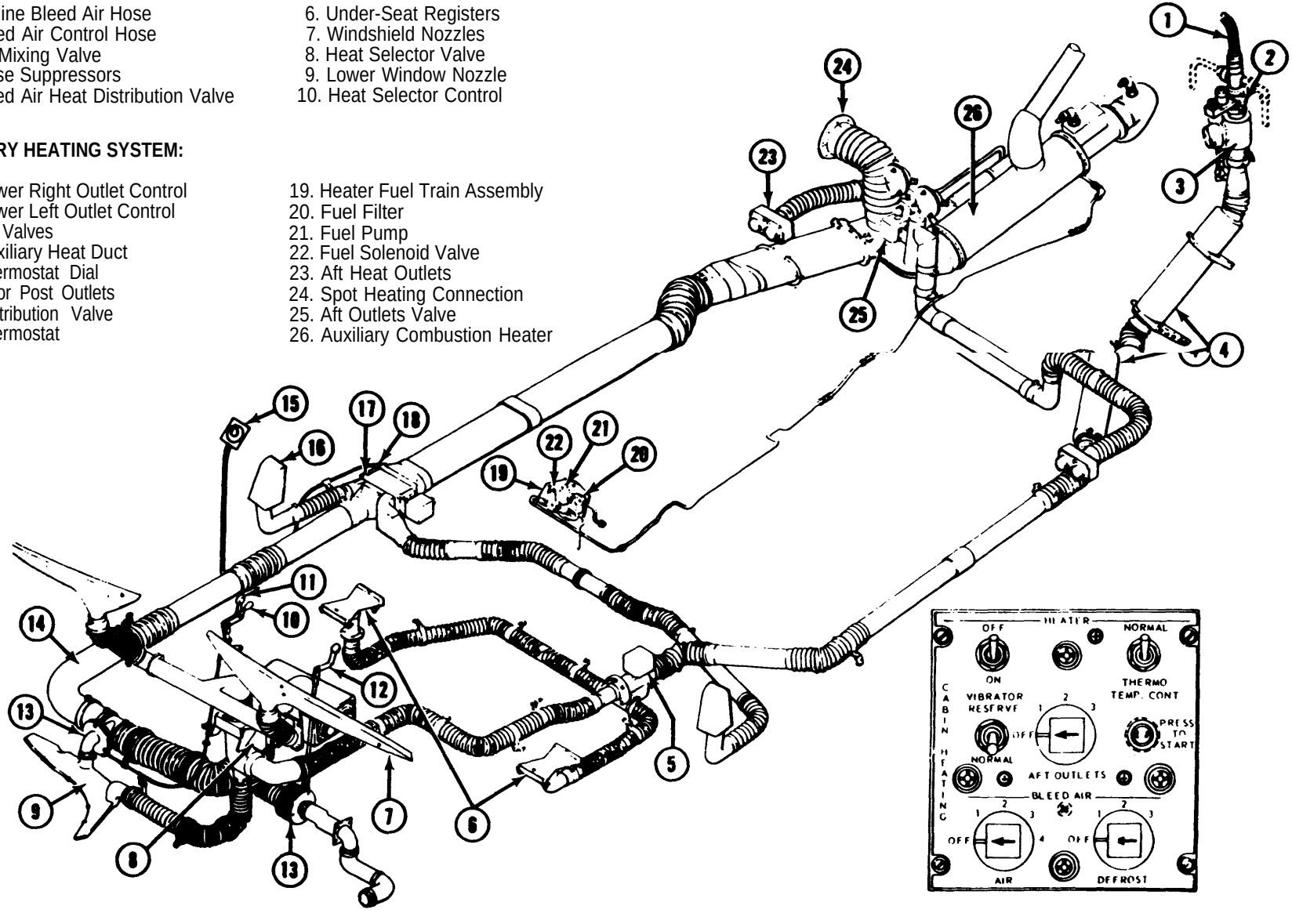

Figure 13-1.1. Heat-Defrost Air System with Auxilliary Heater (Serial Number 62-12351 thru 64-13901)

Figure 13-2 Deleted

13-4. DUCTS, NOZZLES, REGISTERS, GASKETS AND MISCELLANEOUS VALVES.

13-5. Removal-Ducts, Nozzles, Registers, Gaskets and Miscellaneous Valves. Remove attaching hardware and/or clamps and remove component.

13-6. Inspection—Ducts, Nozzles, Registers, Gaskets and Miscellaneous Valves. a. Inspect hoses for cracks, corrosion, wear and deterioration.

b. Inspect nozzles, registers and valves for damage and serviceability.

c. Inspect gaskets or damage.

d. Inspect duct screens for obstructions, cuts and cleanliness.

e. Inspect flexible air ducts as follows.

(1) Silicone damage not in excess of **3.00** inches in length and **1.50** inches wide.

(2) Maximum of two repairs per foot of duct.

(3) No more than 3 percent of surface area may be repaired.

13-7. Repair or Replacement-Ducts, Nozzles, Registers, Gaskets and Miscellaneous Valves and Linkages. a. Replace damaged or unserviceable hoses.

b. Replace nozzles, registers, valves, gaskets and linkages which do not meet inspection requirements.

b.1 Remove and install flapper valve assembly as follows:

(1) Remove floor panel above heater selector valve assembly.

(2) Disconnect clamps on three forward heater hoses and remove hoses.

(3) Disconnect cannon plug at flapper valve motor.

(4) Remove the tape at the aft heat distribution box and slide the rubber coupling back.

(5) Remove distribution box carefully to avoid breakage.

NOTE

Look into forward heater hoses for old flapper parts.

(6) Remove cotter pins on each end of flapper valve shaft and remove shaft.

(7) File flapper valves so that edge of flapper valve is even with shaft housing.

(8) Install new flapper valves with thin aluminum washer on each side of valves.

(9) Hand rotate shaft to insure proper 360° rotation.

(10) If binding, use red grease pencil to mark flapper where it rubs distribution box.

(11) Remove and file flappers until proper 360° rotation is achieved.

(12) Reinstall flappers with both flappers in same position.

(13) Before connecting shaft to motor, apply power with switch in OFF position to insure motor is in off position.

(14) Connect shaft to motor with flappers in off position. Install cotter pins and distribution box.

(15) Apply power and run switch thru OFF, 1, 2, and 3 positions to insure proper operation.

(16) If binding, repeat steps 10-15.

(17) Disconnect cannon plug and install box in proper position.

(18) Reconnect three heater hoses and cannon plug. Plug must be safety wired.

(19) Slide rubber coupling forward and secure with tape (C273.1) to prevent leakage.

(20) Reinstall floor panel above heater selector valve assembly.

c. If necessary, clean and remove obstructions from duct screens. Replace screens if cut or damaged.

d. Repair flexible air ducts as follows:

WARNING

Cleaning materials are flammable and toxic. Avoid skin contact and breathing of solvent vapors.

(1) Clean damaged area with Acetone (C12). Allow cleaned area to air dry a minimum of **30** minutes.

(2) Apply a brush coat of adhesive (C22) on damaged area with a **0.500** inch overlap from edge of damaged area.

(3) Smooth and cure by air drying a minimum of two hours at room temperature or until it is dry to the touch.

(4) Clean the complete circumference of the air duct in the vicinity of damaged area with Xylene (C311) or Toluene (C281). Allow cleaned area to air dry a minimum of **30** minutes.

(5) Use brush to apply a thin coat of adhesive (22) to the complete circumference of the duct in the damaged area and smooth out adhesive.

(6) Cut a piece of fiberglass cloth (C69) of sufficient size to cover the complete circumference of the duct, with a one inch overlap of the damaged area.

(7) Wrap fiberglass cloth around duct and smooth out.

(8) Allow to air dry a minimum of two hours or until dry to touch before handling.

13-8. Installation — Ducts, Nozzles, Registers, Gaskets and Miscellaneous Valves. Install component and secure with attaching hardware and/or clamps.

NOTE

Coat threads of nozzle on bleed air mixing valve (3, figure 13-1.1) with anti seize compound (C47) prior to installing engine bleed air here.

SECTION II. AIR COOLING SYSTEM

Not Applicable

1. Heater exchanger
2. Duct
3. Tee
4. Blower support fan
5. Hot air bleed
6. Tube
7. Blower
8. Duct
9. Elbow
10. Tube, hot air bleed
11. Tube
12. Reducer
13. Elbow
14. Plen, aft outlet distribution
15. Flexible coupling
16. Plenum
17. Tube
18. Tube
19. Distribution valve
20. Capped air outlet
21. Duct
22. Duct
23. V clamp
24. Temperature Control Valve
25. Duct
26. Elbow
27. Bleed air valve
28. Filter

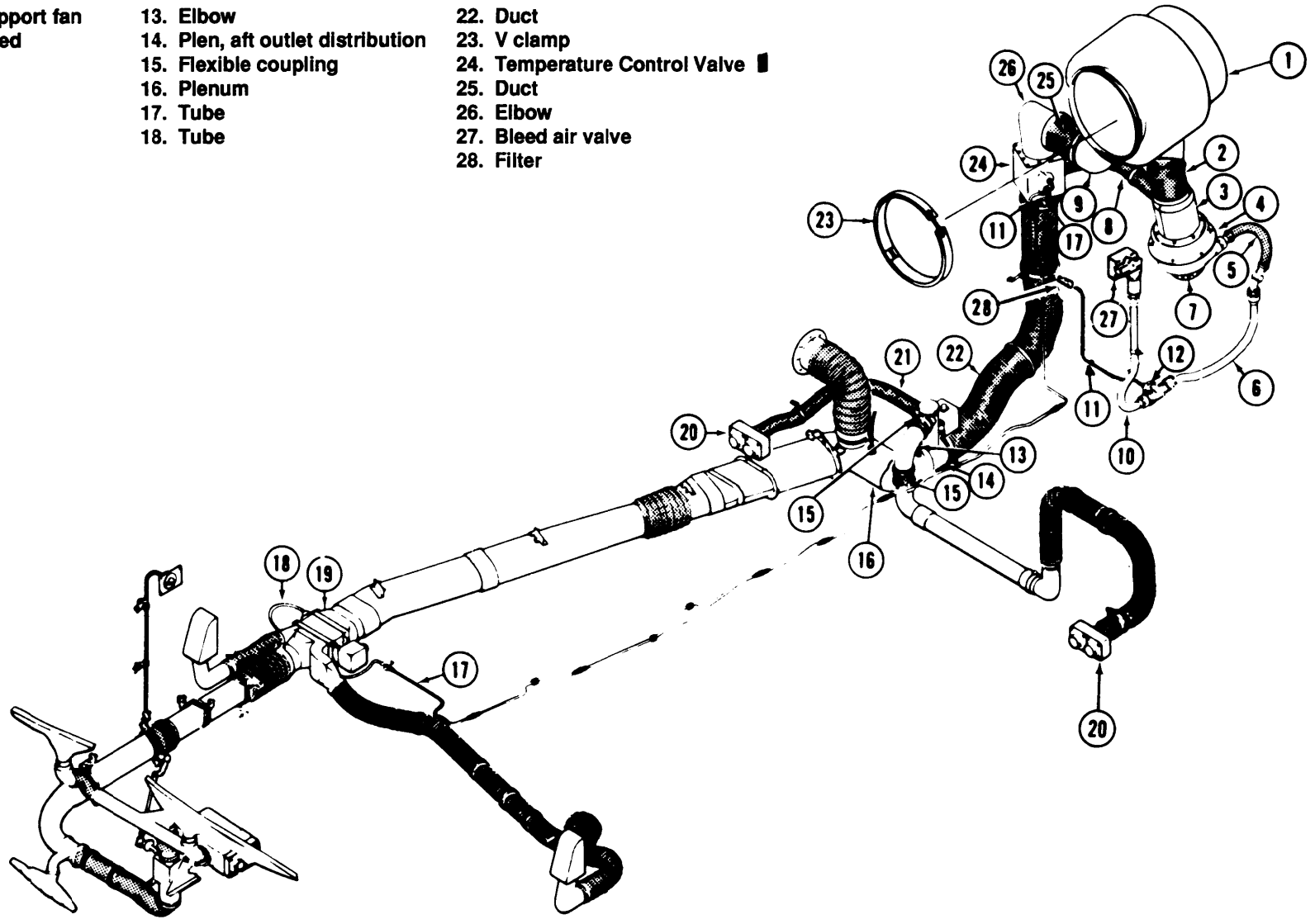

Figure 13-3. Exhaust Heater

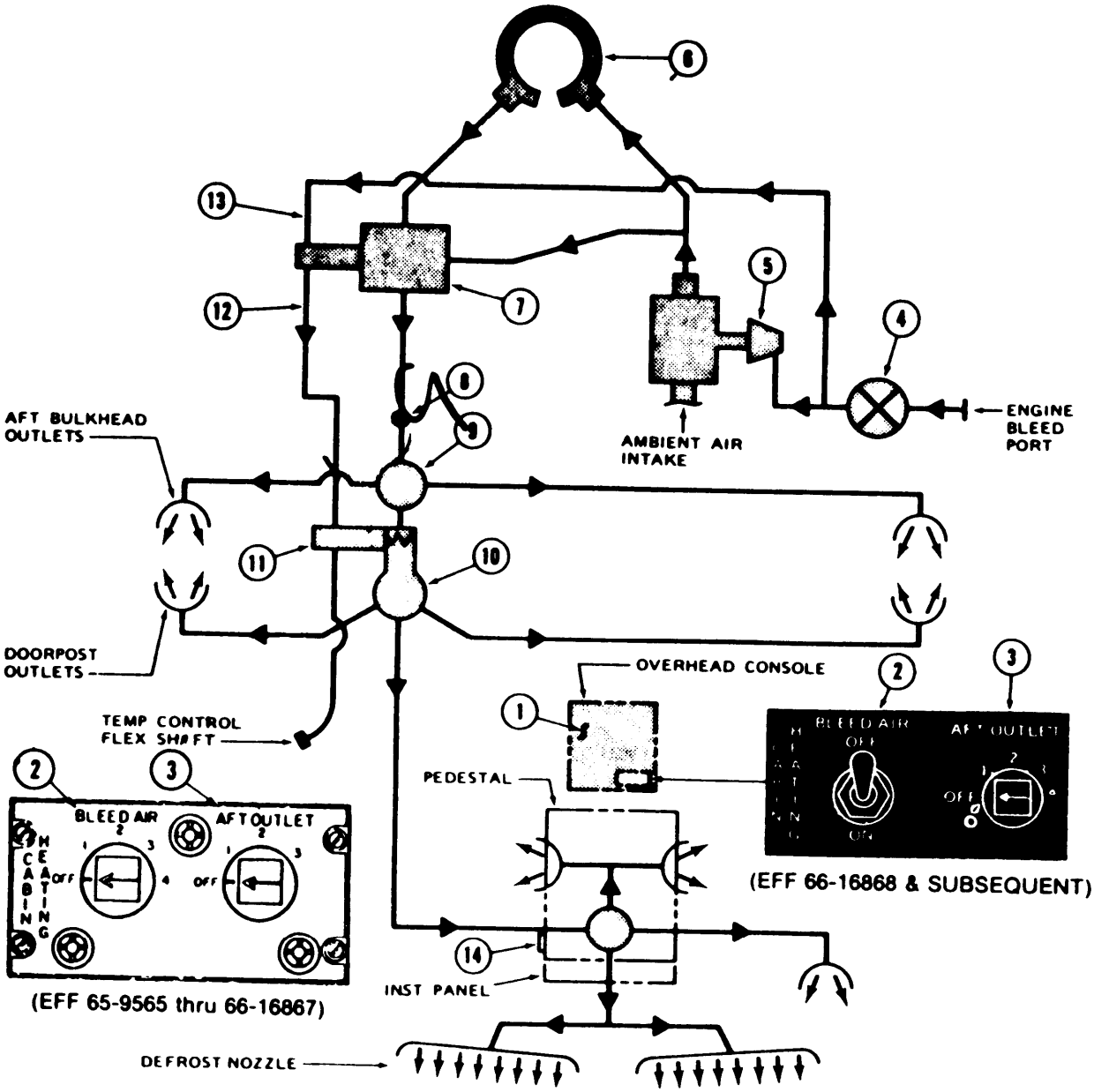

1. Circuit Breakers
2. Bleed Air Switch
3. Heater Aft Outlet Switch
4. Bleed Air Motorized Valve
5. Bleed Air Turbine Driven Turbine Blower
6. Tail Pipe Heat Exchanger
7. Variable Mixing Valve
8. Overheat Switch
9. Aft Outlet Distribution Valve
10. Door Post Outlet Distribution Valve
11. Remote Temperature Sensor
12. Tube From Sensor To Mixing Valve
13. Tube From Bleed Air Line To Mixing Valve
14. Defrost Valve Micro Switch

Figure 13-4. Auxiliary Exhaust Heater System Schematic

13-9. AUXILIARY EXHAUST HEATER.

13-10. Description - Auxiliary Exhaust Heater. The auxiliary exhaust heater (muff heater) system (figures 13-3 and 13-4) consists of a heat exchanger on the exhaust tailpipe, a blower for circulating air through the heat exchanger, a mixing valve to control the air to maintain the desired temperature, a plenum assembly which controls the aft cabin outlet ducts, and connecting ducts.

13-11. Inspection - Auxiliary Exhaust Heater.

a. Check heater ducts for cracks, fraying and wear.

b. Check clamps for security and condition.

c. Check hot air mixing valve for security of mounting.

d. Check temperature control valve for security of mounting.

e. Check plenum for damage and security of mounting.

13-12. HEAT EXCHANGER - AUXILIARY EXHAUST HEATER.

13-13. Description - Heat Exchanger- Auxiliary Exhaust Heater. The heat exchanger (1, figure 13-3) is mounted on the tail pipe of the engine and serves to heat the air as it is distributed through the heat-defrost system. Air is circulated through heat exchanger by the blower fan (4).

13-14. Removal - Heat Exchanger - Auxiliary Exhaust Heater.

a. Disconnect joints between heat exchanger (1), elbow (9) and duct (2).

b. Disconnect drain line from port on underside of heat exchanger (1).

c. Remove clamp (23) at connection between engine exhaust flange and heat exchanger mounting flange.

d. Remove heat exchanger from helicopter.

13-15. inspection - Heat Exchanger - Auxiliary Exhaust Heater (Visual) (Installed).

a. Inspect tailpipe heat exchanger for cracks or holes.

b. Ensure that heat exchanger is securely mounted and connections are tight.

13-16. Inspection - Heat Exchanger - Auxiliary Exhaust Heater - Functional (Uninstalled).

a. Perform leakage test on heat exchanger as follows:

(1) Cap off ventilating air ports on exchanger.

CAUTION

Do not exceed 2.5 psig in performing leakage test.

(2) Attach regulated air supply and pressurize to 2 psig. Close off air supply and monitor pressure guage for two minutes. A drop in pressure indicates a leak.

b. Inspect heat exchanger for leakage. There shall be no leakage allowed into the exhaust side of the heat exchanger.

13-17. inspection - Heat Exchanger.

a. Heat exchangers with through cracks or holes that allow exhaust gases to impinge on structures shall be replaced.

b. Heat exchangers with cracks exceeding the limits defined in c. and d. below shall be replaced:

c. Forward flange area - acceptable limits.

(1) Maximum single crack lengths -2 inches.

(2) Total accumulated length of all cracks in forward tailpipe flange shall not exceed **6** inches.

(3) Cracks shall be separated by not less than **6** inches.

d. Aft tailpipe flange - acceptable limits.

(1) Maximum single crack length **- 6** inches.

(2) Total accumulated length of all cracks in aft tailpipe flange shall not exceed **12** inches.

(3) Cracks shall be separated by not less than the length of the longest adjacent crack in question.

N O T E

All cracks in flanges should be stop drilled with a No. 40 drill.

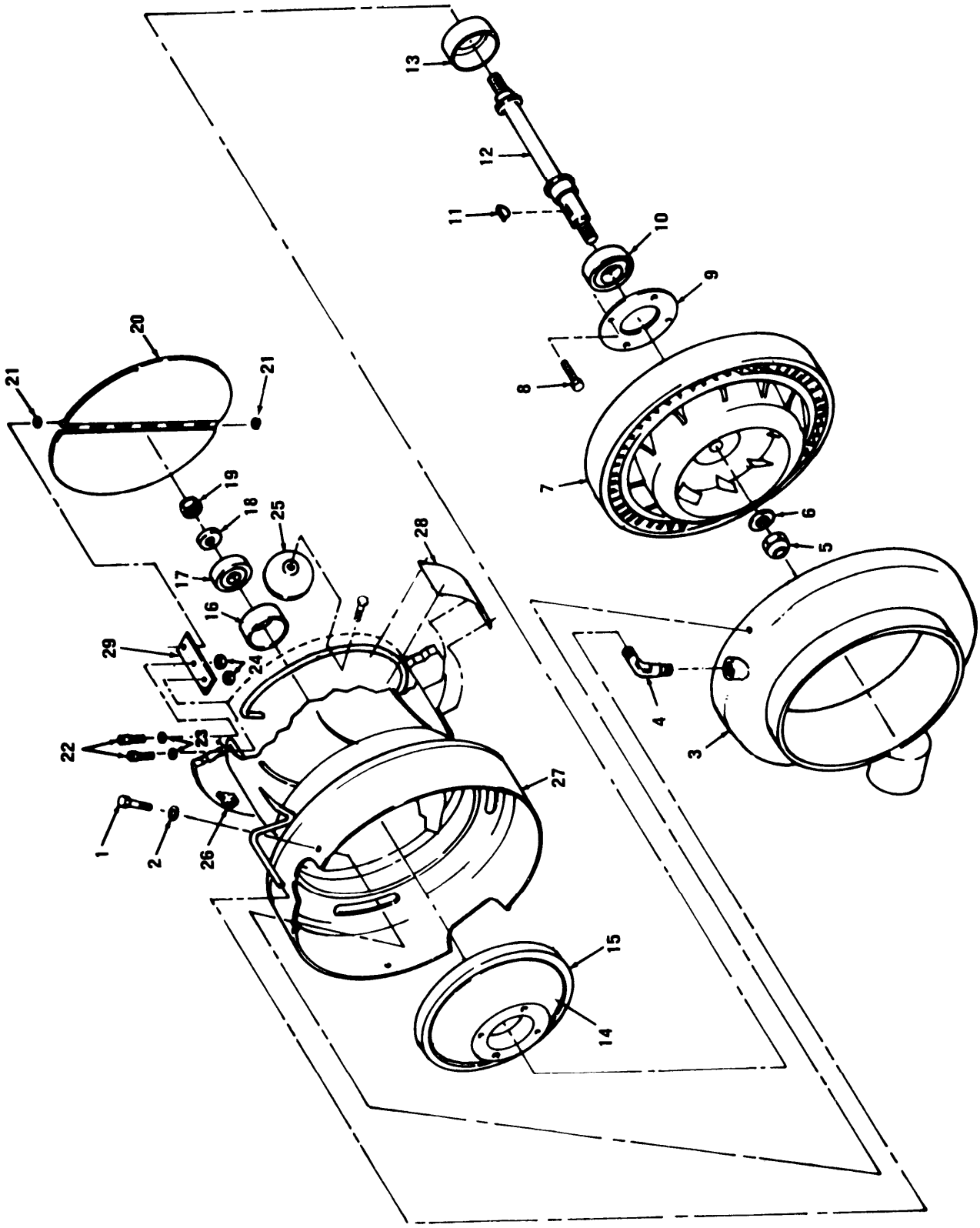

Figure 13-5. Air Blower-Exhaust Heater (Sheet 1 of 2)

Key to Figure 13-5

1. Bolt
2. Washer
3. Inlet Assembly
4. Elbow
5. Nut
6. Washer
7. Fan and Turbine
8. Screw
9. Retainer
10. Bearing
11. Key
12. Shaft
13. Liner
14. Inlet
15. Insert
16. Liner
17. Bearing
18. Washer
19. Nut
20. Butterfly
21. Washer
22. Screw
23. Washer
24. Nut
25. Stop
26. Nut Plate
27. Housing Assembly
28. Identification Plate
29. Bracket

Figure 13-5 (Sheet 2 of 2)

13-18. Installation - Heat Exchanger.

a. Remove protective cover from engine exhaust diffuser.

b. Remove clamp and remove engine exhaust tailpipe from helicopter.

c. Position tailpipe heat exchanger on outer flange of diffuser, with drain fitting down.

NOTE

Ensure dowels in flange in tailpipe heat exchanger engage with holes in engine exhaust diffuser.

d. Secure tailpipe heat exchanger to exhaust tailpipe with "V" band clamp (14) around flanged joint. Put the split in the "V" band at the 6 o'clock position.

e. Connect drain hose from tailpipe to coupling on fuselage.

f. Install tailpipe fairing, antenna and anti-collision light wiring at deck connectors and close driveshaft access door. Place protective cover on tailpipe.

13-19. AIR BLOWER - EXHAUST HEATER.

13-20. Description - Air Blower - Exhaust Heater. A blower assembly, driven by bleed air from the engine, is mounted on the inlet port of heat exchanger.

13-21. Removal - Air Blower - Exhaust Heater.

a. Disconnect bleed air line (5, figure 13-3) from blower beneath deck.

b. Remove clamp securing duct (2) to vertical port of tee (3) and detach duct from tee.

c. Remove clamp securing duct (8) to horizontal port of tee (3). Detach duct from tee.

d. Remove bolts securing blower (7), two gaskets and tee (3) to fan (4). Remove blower from helicopter.

e. Remove screws attaching fan (4) to deck. Remove fan from helicopter.

13-22. Disassembly - Air Blower - Exhaust Heater.

a. Remove bolt (1, figure 13-5), washer (2), and inlet assembly (3) from housing (27).

a1. Remove butterfly (20) and washers (21) by loosening screws (22) and nuts (24) from bracket (29).

b. Remove nut (19) and washer (18) from end of shaft (12).

c. Remove nut (5) and washer (6) from shaft (12). Remove fan and turbine assembly (7) and key (11) from shaft (12).

d. Cut lockwire, if installed, and remove four screws or bolts (8) and retainer (9), from housing (27).

e. Carefully pull shaft (12) with bearings (10 and 17) from housing (27) as a unit.

NOTE

Do not remove identification plate (28) or rotational directional arrows from housing unless damaged.

Table 13-2. Dimension Tolerance - Air Blower - Exhaust Heater

Figure Number	Index Number	Nomenclature	Remarks
13-5	12	Shaft	Replace if front end journal is not within **0.6691** inch to **0.6695** inch diameter or if rear journal is not within **0.4722** inch to **0.4726** inch diameter. Replace if TIR is greater than **0.002** inch.
13-5	27	Housing	Replace linears if front bearing liner is not within **1.3780** inches to **1.3791** inches diameter or if rear bearing liner is not within **1.1024** inches to **1.1034** inches diameter.

f. Using a suitable bearing puller, remove bearings (10 and 17) from shaft (12).

13-23. Cleaning — Air Blower — Exhaust Heater. a. Clean all parts with lint-free cloths saturated with dry cleaning solvent (C261). A soft bristle brush may be used to dislodge stubborn deposits. Wipe clean and dry with filtered compressed air.

b. Remove corrosion deposits on shaft (12) and housing (27) bearing liners (13 and 16) using fine Crocus Cloth (C68) with corrosion preventive oil (C89). Clean parts after removing corrosion.

13-24. Inspection — Air Blower — Exhaust Heater. a. Visually inspect all parts for nicks, burrs, scratches, dents and weldment cracks and for evidence of excessive wear.

b. Inspect ball bearings (10 and 17) for wear damage, roughness or binding. Check that axial play does not exceed 0.010 inch.

c. Inspect fan and turbine assembly (7) for cracks, nicks and scratches and for bent or cracked fan blades.

d. Inspect parts for dimensional tolerances. (See table 13-2.)

13-25. Repair or Replacement — Air Blower — Exhaust Heater. a. Remove burrs and blend minor nicks and scratches with a fine India or Carborundum Stone (C264).

CAUTION

Do not attempt to remove nicks or scratches exceeding 0.025 inch from turbine blades. If the turbine blades are damaged beyond the above limit, replace fan and turbine assembly.

b. Refinish all exposed aluminum surfaces after repair, with alodine (C62) and repaint with one coat of zinc chromate primer (C312) as required.

c. Replace bearings (10 and 17) if they do not meet inspection criteria.

d. Replace components which do not meet the dimensional tolerances in table 13-2.

e. Replace nuts (5 and 19) regardless of condition.

13-26. Assembly—Air Blower—Exhaust Heater. a. Press bearings (10 and 17) on shaft (12) to seat firmly against shoulder on shaft.

CAUTION

Do not force bearings into housing. If bearings do not slip in place with slight hand pressure, check bearing liners for burrs or corrosion.

b. Carefully insert shaft (12) with bearings, as a unit, into shaft bore of housing (27).

c. Position retainer (9) in housing with four bolt (8). Tighten bolt and secure bolt with safety wire.

d. Install key (11) in shaft (12) and install fan and turbine assembly (7) on shaft, align keyway in fan with key in shaft.

e. Install washer (6) and nut (5) on shaft and holding fan and turbine assembly to prevent rotation, tighten nut (5) **115 TO 140** inch-pounds torque.

f. Install washer (18) and nut (19) on shaft and tighten nut **48 TO 55** inch-pounds torque.

g. Position inlet assembly (3) on housing (27) and secure with bolts (1) and washers (2).

h. Install butterfly (20) with washers (21). Washers (21) must be installed to prevent end play in butterfly (20).

13-27. Installation — Air Blower —Exhaust Heater. a. Replace packing on nipple tube and install nipple in blower and torque. Position new gasket on blower flange.

b. Position blower inside support fan (4) and line up holes in blower flange with holes in fan (4) and tee (3).

c. Install fasteners through flange of blower outlet tee (3).

d. Connect bleed line hose assembly (5) to blower inlet port.

13-28. TEMPERATURE CONTROL VALVE.

13-29. Description — Temperature Control Valve. The temperature control valve (24, figure 13-3) senses the air temperature in the distribution ducts and controls the hot air mixing valve by increasing or decreasing bleed air pressure by positioning the flapper valve to maintain the selected temperature.

13-30. Removal — Temperature Control Valve. a. Disconnect tube (17, figure 13-3) from distribution valve (19).

b. Remove brackets that attach tubing (11) to lower end of bulkhead fitting. Disconnect tubing (11) from reducing adapter between bleed air tubes (6 and XX).

c. Disconnect tubing (11, figure 13-3) from temperature control valve (24).

d. Remove tubing (17) from bulkhead fitting and disconnect from temperature control valve (24).

e. Remove clamp that secures duct (25) to elbow (26).

f. Remove elbow (26) and gasket from temperature control valve (24).

g. Remove clamp that secures duct (8) to temperature control valve (24).

h. Remove clamp that secures duct (22) to temperature control valve (24).

i. Remove bolts that secure temperature control valve (24) to cabin deck and remove temperature control valve.

13-31. Inspection - Temperature Control Valve. Inspect temperature control valve for corrosion, damage, and general condition.

13-32. Replacement - Temperature Control Valve. Replace temperature control valve if damage exceeds inspection requirements.

13-33. Installation - Temperature Control Valve.

a. Remove cover on right side of deck.

b. Position temperature control valve (24, figure 13-3) through hole in cabin deck and secure with bolts.

c. Position duct (8) on aft port of temperature control valve (24) and secure duct to temperature control valve with clamp, screw, washer, and nut.

d. Position gasket on top flange of temperature control valve (24). Position elbow (26) on temperature control valve (24) and secure with screws.

e. Position duct (25) on elbow (26) and secure with damp, screw, washer, and nut.

f. Position duct (22) on temperature control valve (24) and secure with clamp.

g. Remove cap from existing bulkhead fitting at right hand forward side of deck. Install tubing (17) from bulkhead fitting to inboard connection of temperature control valve (24).

h. Remove plug from deck and install bulkhead fitting and jamnut.

i. Install tubing (11) from bulkhead fitting to fitting on temperature control valve (24).

j. Attach tubing (11) to lower end of bulkhead fitting, previously installed and route and attach to reducing adapter between bleed air tubes (6 and 10) on left side of fuselage. Secure tubing of bulkhead with brackets, screws, washers, and nuts.

k Remove cap from tube (17) and attach tube to distribution valve (19).

l. Unstow electrical plug near hot air mixing valve (24, figure 13-3) and attach sensor on aft side of temperature control valve.

13-34. OVERHEAT SWITCH.

13-34.1. Description - Overheat Switch. The overheat switch is temperature sensitive and serves to actuate the overheat relay thus turning heater off should an overheat condition occur.

13-35. Removal - Overheat Switch.

a. Disconnect electrical connector.

b. Remove switch.

13-36. Inspection - Overheat Switch.

a. Visually inspect switch for loose wires, corrosion and any damage to case that could impair normal operation.

b. Inspect for proper switch actuation points as follows:

(1) To verify that switch contacts close at 260° F plus 9° For -7° F (1 27.6° ± 3° C), submerge switch up to the threaded portion of the sensor probe in a well agitated high boiling point liquid, such as lubricating oil, MIL-L-23699 NSN9150-00-180-6266. See figure 13-6 for a suggested setup. Heat container on an electric hot plate such as P/N W-H-636, NSN 7310-00-782-0005 or other suitable heat source. Use a thermometer, such as P/N 15-167A, NSN 6685-01-148-2584 or P/N 3234, NSN 6685-00-566-8667. Slowly increase temperature of the liquid no more than 1° F per minute when approaching switch trip point to insure stabilization.

(2) Allow switch to cool and verify that switch contacts open at 225° F plus or minus 9° F (107° C).

(3) The average of 3 readings must be taken as the operating value of the switch.

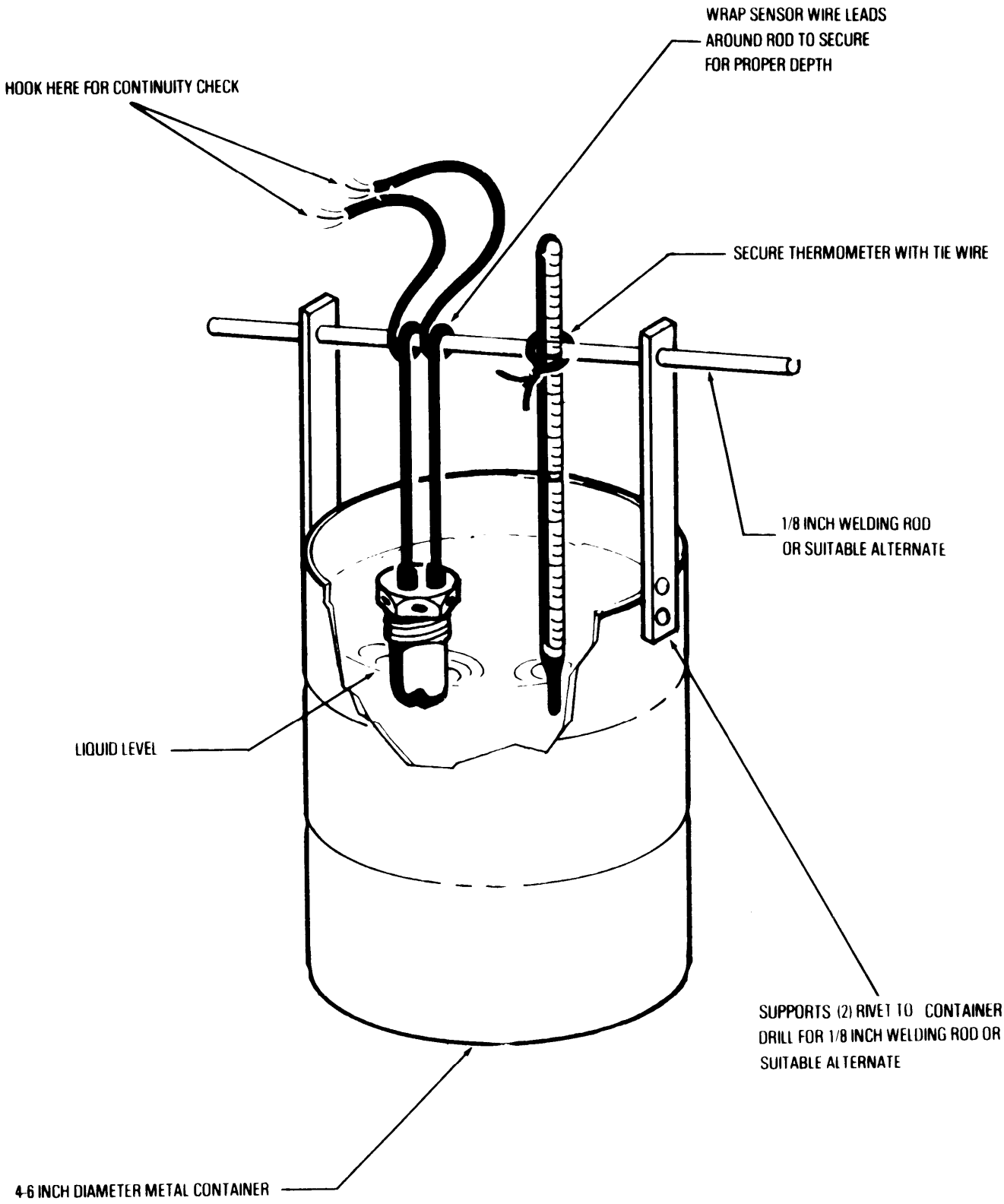

Figure 13-6. Setup For Heat Sensor Test

218-260 0 - 88 - 17

13-37. Replacement—Overheat Switch. Replace switch if it fails to meet inspection requirements.

13-38. Installation—Overheat Switch. a. Position switch on mounting and secure attaching hardware.

b. Connect and tighten electrical connector

13-39. Operational Check—Auxiliary Exhaust Heater. Refer to Chapter 9 for electrical operational check with engine off. Refer to table 13-3 for operational performance test with en gine operating.

Table 13-3. Exhaust Heater performance Test (With Engine Operating)

	TURN HEATER ON	CLOSE CABIN HEATER CIRCUIT BREAKERS. PLACE HEATER SWITCH TO ON
A	AIR DISTRIBUTION SYSTEM	CHECK OR VERIFY THAT BLOWER IS OPERATING. CHECK OR VERIFY OPERATION OF DOOR POST AND AFT CABIN OUTLETS.
B	TEMPERATURE CONTROL	CHECK OR VERIFY OPERATION OF VARIABLE MIXING VALVE AND TEMPERATURE SENSOR BY VARYING TEMPERATURE SETTING.
C	PROTECTION SYSTEM	NO PERFORMANCE TEST APPLICABLE.

13-40. Troubleshooting—Auxiliary Exhaust Heater. Refer to heater system schematic diagram, figure 13-4, electrical diagram, Appendix F, and table 13-4 as necessary to isolate trouble.

NOTE

The auxiliary exhaust heater is made up of three basic subsystems.
a. Air Distribution System
b. Temperature Control System
c. Protection System

Table 13-4. Troubleshooting—Auxiliary Exhaust Heater

Part A Air Distribution System

CONDITION

TEST OR INSPECTION

CORRECTIVE ACTION

1. Bleed air valve fails to operate, open or closed.

STEP 1 Check for voltage at load side of circuit breaker

If no voltage, replace circuit breaker (paragraph 9-12).

Table 13-4. Troubleshooting—Auxiliary Exhaust Heater (Cont)

Part A – Air Distribution System (Cont)

CONDITION

TEST OR INSPECTION

CORRECTIVE ACTION

STEP 2 Check for defective bleed air OFF-ON switch, faulty wiring, or defective bleed air valve

STEP 3 Check for 28 Vdc from pin A to pin C of P146 (bleed air valve disconnect) with bleed air switch ON. If no voltage, replace defective switch or repair wiring as necessary If voltage exists, and valve fails to open, replace valve (Appendix F and paragraph 13-5.)

STEP 4 Check for 28 Vdc from pin C to pin B of P146 (bleed air valve disconnect) with bleed air switch in OFF position. If voltage exists and valve fails to operate (with bleed air valve connected), replace valve (paragraph 13-5).

2. No position control of aft outlet valves.

STEP 1 Check defective aft outlet switch, faulty wiring, or defective aft outlet valve (paragraph 13-5).

STEP 2 Check for 28 Vdc at Aft Outlet switch (S85) in the following positions

OFF	23 to GRD
1	24 to GRD
2	25 to GRD
3	26 to GRD

Replace switch if any of above conditions are not satisfied.

STEP 3 Check for 28 Vdc at P166 (Aft Outlet valve) with switch (S85) in the following positions.

OFF	Pin E to A
1	Pin D to A
2	Pin C to A
3	Pin B to A

No voltage reading in any of the above positions indicates faulty wiring, repair as necessary. If voltage exists in the above positions and outlet valve fails to operate, replace valve (paragraph 13-5).

3. Ventilation blower does not operate

STEP 1 Check for clogged bleed air line (paragraph 13-21).

Clear line, check for ice in line (paragraph 13-21).

STEP 2 Check for defective bleed air turbine blower

Replace blower if defective (paragraph 13-21).

Table 13-4. Troubleshooting—Auxiliary Exhaust Heater (Cont)

Part A — Air Distribution System (Cont)

CONDITION

TEST OR INSPECTION

CORRECTIVE ACTION

4. No airflow control thru door post outlets.

STEP 1. Check for defective Aft Outlet switch, faulty wiring or defective door post outlet valve (paragraph 9-5, or 13-6).

STEP 2. Check for 28 Vdc at Aft Outlet switch (S85) in the following positions.

OFF	13 to GRD
1	14 to GRD
2	15 to GRD
3	16 to GRD

Replace switch if any of the above conditions are not satisfied.

STEP 3. Check for 28 Vdc at P138 (door post outlet valve) with switch (S85) in the following positions.

OFF	Pin B to A
1	Pin C to A
2	Pin D to A
3	Pin E to A

No voltage reading in any of the above positions indicates faulty wiring, repair as necessary. If voltage exists in the above positions and door post outlet valve fails to operate, replace valve (paragraph 13-5).

5. No air delivered to aft outlets with air directing lever positioned to HEAT.

Check for defective defrost valve microswitch.

Replace microswitch if defective (paragraph 9-5).

6. No air delivered to defrost nozzle with air directing lever positioned to defrost.

Check for defective defrost valve microswitch.

Replace microswitch if defective (paragraph 9-5).

CHAPTER 14
HOIST AND WINCHES

SECTION I. PERSONNEL RESCUE HOIST

WARNING

Use of a Breeze BL 8300 series Internal Rescue Hoist is prohibited.

Paragraphs 14-1 through 14-148, 14-150 through 14-156, and 14-158 through 14-259 have been deleted. Figures 14-1 through 14-16, 14-17 through 14-19, 14-22 through 14-26 and figures 14-28 through 14-30 have been deleted.

14-3. Inspection -- Rescue Hoist (Installed).

a. Inspect hoist cable (3, figure 14-1) for cleanliness, broken wires, kinks, and other evidence of damage. Check cable for interferences along its routing.

b. Inspect upper, middle and lower rollers (40,42 and 43) for damage and freedom of movement.

c. Inspect traction sheave assembly (1) for pulley damage and pressure roller for spring tension on hoist cable (3).

d. Inspect adapter (11 and 27) for positive locking and security to roof stud (10) and plate stud (26). Check the two actuator plates (28) for security of adapter fittings (26) to floor studs (27).

e. Inspect power cables (6, 18,21, 31, and 34) for condition and security.

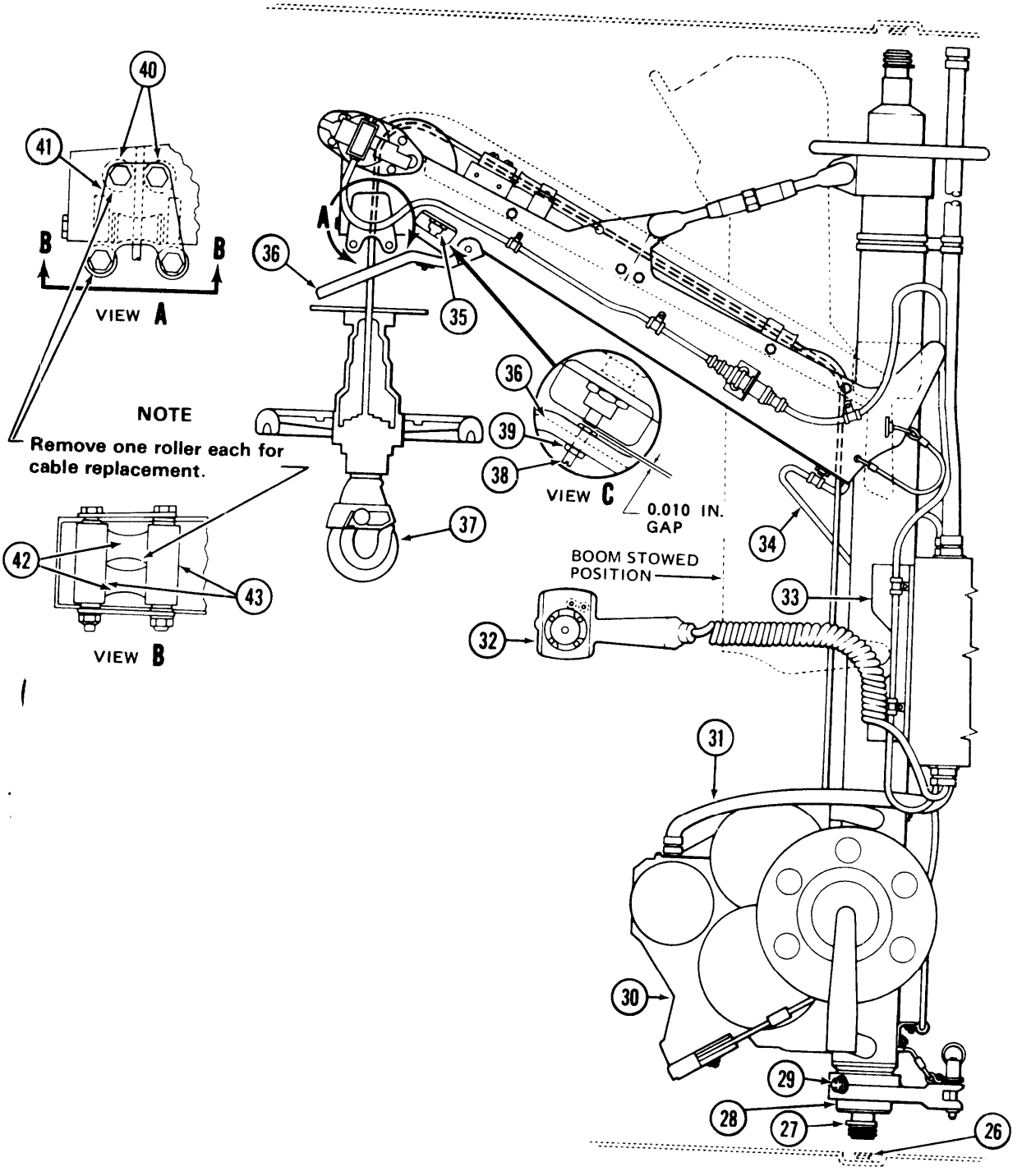

Figure 14-1. Rescue Hoist (Sheet 2 of 3)

1. Traction sheave assembly
2. Boom cover
3. Hoist cable
4. Guillotine assembly
5. Guide tube
6. Sheave power cable
7. Boom
8. Turnbuckle
9. Pulley
10. Roof stud
11. Adapter
12. Support
13. Locknut
14. Fitting
15. Post
16. Guide bolt
17. Boom retaining pin
18. Hoist power cable
19. Control box
20. Bracket—upper
21. Actuator power cable
22. Bracket—lower
23. Pin
24. Actuator lever
25. Actuator
26. Floor stud
27. Adapter
28. Support—lower post
29. Bolt—actuator lever
30. Hoist drive unit
31. Drive unit power cable
32. Control pendant
33. Mounting angle
34. Guillotine power cable
35. Limit switch—up
36. Trigger assembly
37. Hook and bumper assembly
38. Bolt—up limit switch actuator
39. Nut—uplimit switch actuator
40. Upper rollers
41. Side plates
42. Middle rollers
43. Lower rollers

Figure 14-1. Rescue Hoist (Sheet 3 of 3)

f. Inspect control box (19) and control pendant (32) for security of attachment, power cables for connections, and switches for proper function and condition.

g. Check pilots and hoist operator CABLE CUT switch guards are closed and secured with breakaway wire (C305).

h. Ensure that guillotine assembly (4) is properly charged. Do not discharge.

i. Check oil level in gearbox of hoist drive unit (30).

j. Inspect rescue hoist for general condition and security of all components.

k. Perform operational check (paragraph 14-4).

14-4. Operational Check — Rescue Hoist. Perform operational check of rescue hoist as follows:

CAUTION

Ensure cargo door adjacent to hoist is fully open and secured before operating hoist.

CAUTION

Ensure a minimum load of 5 pounds, normally the weight of the hook and bumper assembly, is maintained on the hoist cable when it is reeled out.

NOTE

To ensure hoist is inspected after each operation, apply a 2-inch wide, 6-inch long strip of white adhesive tape on hoist post or control box in a prominent location. Divide tape into two columns: one column to indicate date of usage, the other to be initialed by operator or inspector.

a. BAT Switch — ON.

b. NON-ESS BUS Switch MANUAL — ON.

NOTE

If external power is used, position BAT switch to OFF and NON-ESS BUS switch to NORMAL-ON.

c. Check that CABLE CUT switch guards are in closed, and secured with breakaway wire (C305). Ensure that guillotine assembly is properly charged. Do not discharge.

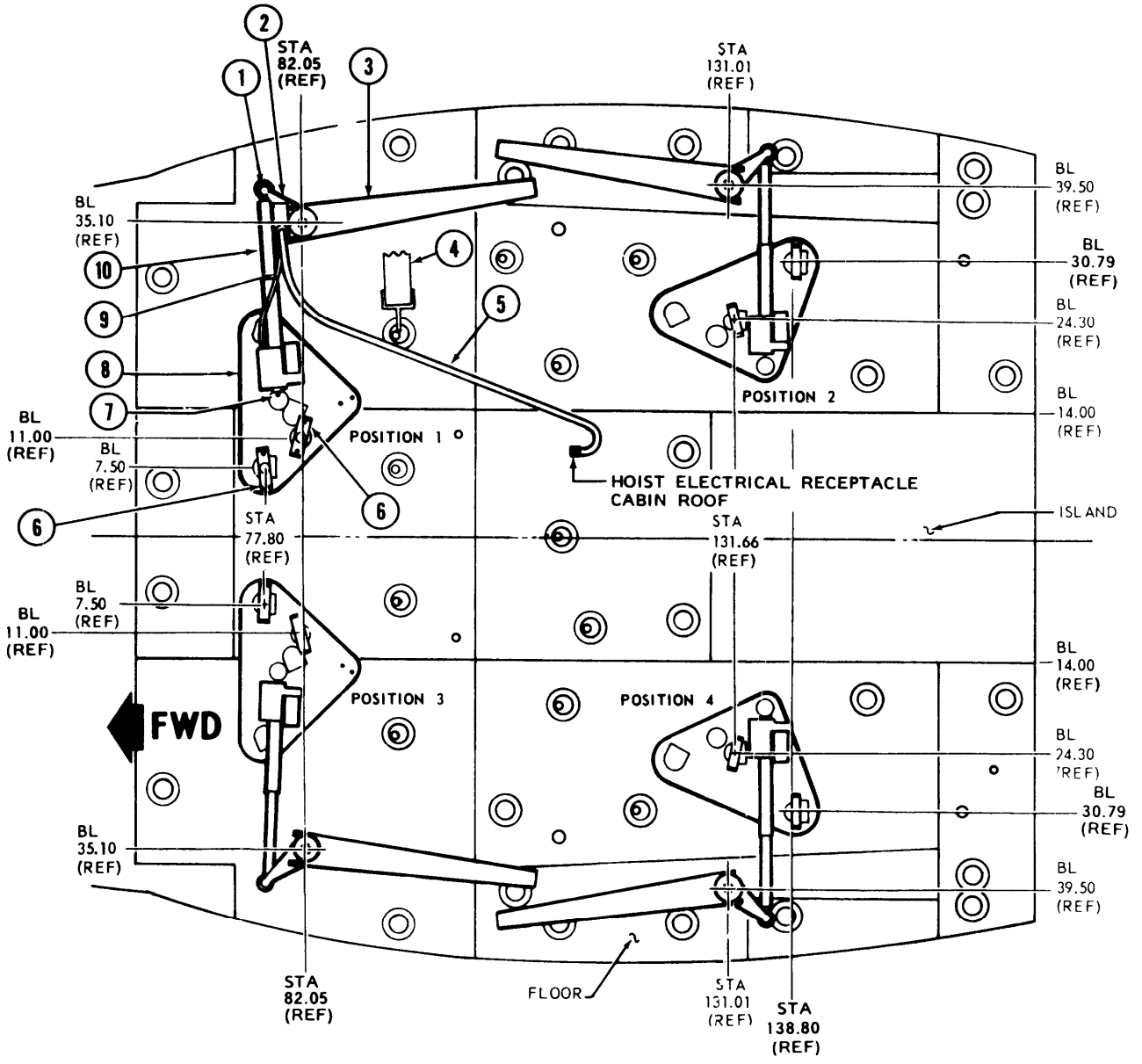

PLAN VIEW OF CABIN FLOOR

1. Pin
2. Actuator lever
3. Rescue hoist assembly
4. Safety vest strap
5. Winch power cable
6. Adapter fittings
7. Knob
8. Actuator plate
9. Actuator power cable
10. Actuator

Figure 14-2. Rescue Hoist Positions

d. Close HOIST PWR, HOIST CONT, and HOIST CABLE CUT circuit breakers.

e. On control pendant, hold BOOM switch to OUT position. Observe that hoist boom swings to outboard, release switch and observe switch return to center position. Hold control button to IN position, boom should swing to inboard position.

f. On pilots cyclic stick, hold hoist control button to right, observe that boom swings to outboard, release switch and allow control button to center. Hold control button to left position, boom should swing to inboard position.

g. Place boom in full outboard position, using either control. Ensure that top of boom will clear door frame.

WARNING

Full speed operation of hook and bumper assembly into up limit switch might overstress hoist cable without causing visible damage. Cable should be replaced if this is suspected or known. (This may be caused by limit switch or motor brake out of adjustment).

WARNING

Do not spill oil on storage drum clutch. Wipe clean and dry any oil spilled on floor around hoist.

CAUTION

Operate rescue hoist normally at full speed, to avoid excessive heating of motor and gearbox. Use slow speed near either end of hoist cable travel.

N O T E

To simulate lowering and raising the hook and bumper assembly in the following steps, use a cleaned out 55 gallon oil drum with top removed and rubber bumper (split hose) placed around rim or other suitable container of equal size. Allow hoist cable to coil into drum as cable is extended from hoist. Dragging cable over ground or allowing it to kink must be avoided.

h. Move pendant control cable switch to right and toward DOWN. Hoist cable should reel out, and speed should be faster as control is moved further from center position. Check oil level through sight glass on gearbox of hoist driven unit, while hoist is running. Stop drive unit by releasing control switch. If required, add oil through filler port on side of gearbox (paragraph 14-12.). Return pendant control switch to DOWN and continue reeling cable out, observing amount of cable on storage drum. Hoist drive motor should stop (by action of down-limit switch on storage drum) when three wraps of cable remain on storage drum.

i. Check operation of traction sheave by powering out 10 feet of cable under a no load condition. (Do not pull on the cable or allow the weight of the hook to apply tension to the cable.) The traction sheave will keep the internal cable routing under tension properly. If the traction sheave is not working, slack will appear in the internal cable routing and can be observed between the motor and boom where it runs near the hoist post. If the sheave is not working, the hoist shall not be used until it is repaired and the cable condition and routing are verified as serviceable.

N O T E

Check traction sheave assembly daily for operation and condition. Failure of traction sheave to operate can lead to hoist cable looseness at hoist drive unit and misrouting, followed by cable entanglement and breakage. Avoid forcing the boom in or out which can lead to actuator relay failure. Use boom to swing (free hanging) load through door. Avoid pulling loads into helicopter without bringing in boom since this tends to kink and weaken cable near the hook and bumper assembly. The hook should not be allowed to cock and should hang nearly straight to reduce strain on cable where it joins the hook.

j. Inspect hoist cable for clean condition, broken wires, kinks, and other evidence of damage. Check cable drum for wobble while hoist is operating and that cable windings on drum are uniform and flat.

k. Move pendant control switch left then toward UP position. Hoist cable should reel in, with faster speed when control is moved further from center. Release switch and observe that it centers and hoist drive motor stops.

l. Resume reeling in hoist cable, with pendant control held to UP position. With approximately 3 feet of cable left extended, stop hoist drive motor by releasing switch and inspect hook and bumper assembly for condition. Disconnect boot for inspection of cable ball end. Replace boot.

m. Resume reeling in hoist cable at slow speed and let hook rubber covered spring bumper actuate trigger on boom against up-limit switch. Hoist drive motor should stop with very little compression of bumper in slow speed mode.

n. Check operation with control button on pilots cyclic stick, move button down to reel out hoist cable approximately 5 feet and move up to reel in cable. Operation should be same as with pendant control switch, except that speed is not variable.

WARNING

Prior to actual "live" hoisting of personnel after a rescue hoist has had a new or used hoist cable installed or rerigged in any way, one or more hoist lifts of a total of at least 20 feet of upward movement shall be made with a dummy load of 300 pounds. If a low profile weight is used, 300 pound lift can be made. with helicopter on the ground.

CAUTION

If hoist is not fitted with a traction sheave assembly it must be removed from service until modified (MWO 55-1500-206-30/1).

14-6. Troubleshooting — Rescue Hoist. Troubleshoot the rescue hoist assembly in accordance with Table 14-1.

NOTE

Before using this table, be sure you have performed all normal operational checks.

NOTE

Ensure that HOIST CONT, HOIST PWR, and HOIST CABLE CUT circuit breakers in overhead console are closed; the NON-ESS BUS switch is set to MANUAL ON position and BATT switch is ON.

For wiring diagrams refer to paragraph F-11.

NOTE

During final rewind of hoist cable, a clean, heavy, lint-free cloth should be held firmly around cable. The cloth will help remove foreign particles (grit, dirt, etc.) and in the event a broken wire (or wires) were overlooked during visual inspection, the wire end will snag the cloth, preventing break from being overlooked. No broken wire (or wires) allowable in hoist cable.

Table 14-1. Troubleshooting - Rescue Hoist

CONDITION

TEST OR INSPECTION

CORRECTIVE ACTION

1. HOIST PWR circuit breaker opening.

STEP 1. Ensure 28 Vdc power is available through closed circuit breaker. Check circuit with multimeter.

If multimeter does not read 28 Vdc, replace faulty circuit breaker (paragraph 9-12).

STEP 2. Ensure 28 Vdc power is available to power relay with HOIST PWR circuit breaker closed. Check circuit with multimeter.

If multimeter does not read 28 Vdc, replace faulty power relay (paragraph 9-6).

Table 14-1. Troubleshooting — Rescue Hoist (Cont)

CONDITION

TEST OR INSPECTION

CORRECTIVE ACTION

STEP 3. Ensure that continuity is available in hoist power circuit with multimeter.

If multimeter does not indicate continuity repair shorted or broken wiring. (paragraph 9-5).

2. Hoist power inoperative when pendant or pilot hoist control switch is operated to hoist extend or hoist retract.

STEP 1. Ensure that 28 Vdc power is available at sense control. Check circuit with multimeter.

If multimeter does not read 28 Vdc, replace faulty sense control (paragraph 9-5).

STEP 2. Ensure 28 Vdc power is available to power relay. Check circuit with multimeter.

If multimeter does not read 28 Vdc, replace faulty power relay (paragraph 9-5).

STEP 3. Check continuity of control switches in control pendant or pilot cyclic control switch.

If multimeter does not indicate continuity replace faulty control pendant or plot control switch (paragraph 14-111 or paragraph 9-5.)

STEP 4. Ensure 28 Vdc power is available through HOIST CONT circuit breaker. Check circuit with multimeter.

If multimeter does not read 28 Vdc, replace faulty circuit breaker (paragraph 9-1 2).

STEP 5. Ensure 28 Vdc power is available through control relays or circuits in hoist control box

If multimeter does not read 28 Vdc replace faulty hoist control box (paragraph 14-72).

3. Boom does not swing in or out when actuating control switch in pendant or pilot control switch.

STEP 1. Ensure 28 Vdc power is available through control circuit in control box.

If multimeter does not read 28 Vdc replace faulty hoist control box (paragraph 14-72).

STEP 2. Check continuity of control switches in control pendant or pilot cyclic control stick.

If multimeter does not indicate continuity replace faulty control pendant or pilot control switch (paragraph 14-111 or paragraph 9-5).

STEP 3. Ensure 28 Vdc power is available to plug for actuator with IN-OUT switch actuated.

If multimeter indicates 28 Vdc, replace faulty actuator (paragraph 14-6).

Table 14-1. Troubleshooting – Rescue Hoist (Cont)

CONDITION

TEST OR INSPECTION

CORRECTIVE ACTION

4. Pilot unable to override action of pendant hoist controls with cyclic stick hoist controls.

Ensure 28 Vdc power is available through control relays in hoist control box.

If multimeter does not read 28 Vdc power through control relays, replace faulty hoist control box (paragraph 14-72).

S. Pendant switch will not return to center; motor continues to run.

Ensure that rubber boot over switch is secured and not damaged.

Secure or replace damage boot (paragraph 14-113).

6. Hoist cable snarls in boom when hook is reeled out.

STEP 1. Ensure 28 Vdc power is available at plug at traction sheave assembly.

If multimeter does not read 28 Vdc, repair defective wiring (paragraph 9-5).

STEP 2. Ensure that traction sheave pulley rotates during hoist cable reel-out.

If traction sheave pulley does not rotate, replace traction sheave assembly (paragraph 14-14).

STEP 3. Ensure that traction sheave assembly pressure roller maintains tension on hoist cable and is free to rotate.

If pressure roller is not maintaining hoist cable contact, replace spring, or if roller is not free to turn, replace assembly (paragraph 14-12).

7. Hoist cable jams or is kinked.

Inspect complete length of hoist cable for condition and damage.

If hoist cable exceeds the inspection criteria of paragraph 14-30, replace cable (paragraph 14-28).

14-6. Removal – Rescue Hoist. a. Disconnect battery.

b. Open soundproofing in cabin roof for access to receptacle for hoist power cable (18, figure 14-1), Disconnect cable from receptacle and close soundproofing.

c. Pull pin (23) securing actuator (25) to actuator lever (24) at base of rescue hoist.

d. Disconnect actuator power cable (21) from receptacle on actuator (25). Stow cable to rescue hoist and install dust covers on plug and receptacle.

e. Remove knurl knob (7, figure 14-2) from actuator plate (8) and remove actuator (10). Reinstall knob in plate.

f. Remove nuts securing two adapter fittings (6) and remove fittings and actuator plate (8). If plate is installed in forward position remove screw and washer near outboard end.

g. Release quick disconnect adapters (11 and 27, figure 14-1) at cabin roof and floor. Loosen locknut (13) and lower support (12) enough to clear roof stud (10). Move top of post (15) aft, lift rescue hoist from floor stud (26) and remove from helicopter.

CAUTION

Store in upright position if possible. Lay the hoist assembly on a padded surface with the cable storage drum up. Weight of the hoist assembly on the drum may bend the drum side frames. During transport of the hoist, extreme care should be taken to avoid damage to hoist components. The hoist boom is normally left in the extended position.

h. Install AN 525-10R14 screw in cabin floor if rescue hoist is not to be reinstalled.

14-7. Disassembly — Rescue Hoist. Refer to applicable paragraph for removal of hoist components. Remove parts only to the extent necessary to accomplish repairs.

WARNING

Cleaning materials are flammable and toxic. Avoid skin contact and breathing of solvent vapors.

14-8. Cleaning — Rescue Hoist. Clean rescue hoist with cloths dampened with solvent (C261). Do not spray clean; damage to electrical components may result.

14-90 Inspection — Rescue Hoist (Removed)

a. Inspect hoist cable (3, figure 14-1) for clean condition, broken wires, kinks, and other evidence of damage (paragraph 14-30).

b. Inspect all pulleys and rollers for damage and freedom of movement.

(1) Inspect upper, middle and lower rollers (40, 42 and 43, figure 14-1) for freedom of movement (paragraph 14-143).

(2) Inspect pressure roller at traction sheave assembly (1, figure 14-1) for spring tension on hoist cable (3), (refer to paragraph 14-17).

c. Inspect hoist drive unit (30, figure 14-1), (paragraph 14-100).

d. Inspect guillotine assembly (4, figure 14-1), (paragraph 14-37).

e. Inspect rescue hoist power cables (6, 18, 21, 31, and 34, figure 14-1) for condition and security (paragraph 14-49).

f. Inspect control box (19, figure 14-1) and control pendant (32) for the following (paragraphs 14-73 and 14-112):

(1) Check security of mounting to hoist post.

(2) Check security of switches.

(3) Check security of cable connectors.

(4) Inspect cables for fraying and wear. Inspect coil wire end and plug for security.

(5) Inspect rubber boot for security.

N O T E

If pendant switch will not return to center and motor continues to run rubber boot is not secure.

g. Check oil level in gearbox of hoist drive unit (30, figure 14-1), (paragraph 14-12).

h. Inspect actuator (25, figure 14-1) for damage. Check electrical cabling for condition.

i. Inspect rescue hoist for correct installation and security of all components, hardware, cotter pins, lockwire, etc.

14-10. Repair or Replacement — Rescue Hoist

a. The rescue hoist is a life saving device, therefore repair of parts is limited. Parts that exceed a minor damage limit **0.0015** inch for nicks and scratches shall be replaced.

b. Repair or replace parts that exceed the inspection limits of paragraphs 14-3 or 14-9 and inspection paragraphs pertaining to hoist components within Section 1 of this chapter.

c. Deleted.

d. Replace hoist cable (3, figure 14-1) if broken wire (J) or kinks are evident (paragraph 14-28).

e. If storage drum wobbles and the runout exceeds **0.050** inch on outer indicator and **0.015** inch on inner indicator, measured with a dial indicator, as outlined in paragraph 14-106, replace the hoist drive unit (30, figure 14-1).

f. If traction sheave motor is inoperative or sheave pulley is damaged or badly worn, replace the complete traction sheave assembly (1), (paragraph 14-16).

g. Replace pressure roller assembly when loose or damaged at pulley of traction sheave assembly (1, figure 14-1) (paragraph 14-16).

h. Replace damaged or badly worn pulley (9, figure 14-1) and rollers (40,42 and 43). Shallow cable marks in rollers and pulleys are not cause for replacement. Disassemble and clean pulley and rollers that do not rotate freely. Replace badly worn parts.

WARNING

Cleaning materials are flammable and toxic. Avoid skin contact and breathing of solvent vapors.

N O T E

The six rollers in the outboard end of the hoist boom incorporate oilite bushings which eliminate the need for lubrication. Do not oil these bushings or the felt dust washers protecting the ends of the rollers. Clean bushings and bolts with a cloth dampened with solvent (C261). Do not immerse rollers in cleaning solvent.

i. Remove rubber pressure roller from hoist drive unit (30, figure 14-1) and carefully check for freedom of movement on shaft and for signs of scuff marks (paragraph 14-79).

j. Replace actuator (25, figure 14-1) if a malfunction has occurred or damage is evident.

14-11. Assembly – Rescue Hoist. Refer to applicable paragraphs for installation of hoist components.

14-12. Lubrication — Rescue Hoist. To properly check oil supply level of hoist drive unit (30, figure 14-1), system must be operated and hoist cable reeled out and reeled in at least **25** feet. This shall be accomplished by two men; one to operate hoist and the other to walk cable. The oil level in hoist gearbox should be checked at the time that the hoist is running and cable is either being reeled out or reeled in. Do not drag cable or put excess tension on it.

WARNING

Do not spill oil on hoist storage drum clutch. Wipe clean and dry any oil spilled on helicopter floor or around hoist.

a. The hoist drive unit is lubricated with oil (C169), serviced through a filler port on side of gearcase. With hoist in operating position, fill gearbox to top of sight glass located below filler port.

NOTE

Do not use filler port dipstick to measure oil level in this installation.

b. Wipe surfaces of hoist and helicopter floor to remove all spilled oil.

14-13. Installation — Rescue Hoist.

NOTE

The rescue hoist assembly should be placed in position 1 or 3 in the cabin (figure 14-2). Helicopters equipped with personnel rescue

hoist provisions and subject to frequent installation of the rescue-hoist kit should be rigged to provide maximum cyclic control capability for the side opposite the hoist (desirable, but not mandatory). Refer to Chapter 5, Section II, for swash-plate setting.

If only one auxiliary fuel cell is used, it should be opposite the hoist.

a. Disconnect battery and external power.

b. Place rescue hoist upright with lower adapter (27, figure 14-1) on floor stud (26) and align top adapter (11) with roof stud (19). Adjust length of post (15), as required, by loosening locknut (13) and lowering or raising support (12).

CAUTION

Do not use hoist if roof or floor studs (10 and 26) and adapter (11 and 27) cannot be manipulated to the snap-to-lock position.

Do not use tools or extension bars to turn locknut (13). Hand tighten only. Excessive force applied in turning locknut may result in damage to the roof structure.

NOTE

When using either forward position, remove AN525-10R 14 screw (Sta. 77.80, BL 21) for installation of MS27039-1-22 screw (refer to step 3 below).

c. Install two stud adapters (4, figure 14-3) on cabin floor studs, according to selected hoist position.

d. Place actuator plate (1) over installed stud adapters (4) then adapter fittings (3), secure with washers and nuts.

e. If a forward position is being used, install an MS27039-1-22 screw with washer in outboard end of actuator plate (1), through hole (5) beside stencil and into cabin floor (where a screw was previously removed).

f. Determine correct position of actuator lever (24, figure 14-1) according to hoist installation position. To change position, remove actuator lever bolt (29), reposition lever, as required. Reinstall actuator level bolt.

CAUTION

Operation of actuator P/N: WE-2834 before attaching hoist post level will result in damage to actuator. Do not operate actuator unless the extension tube is fixed so that it will not rotate.

g. Install actuator (25) (either side may be up) between actuator plate (8, figure 14-2) and actuator lever (2). Secure motor end of actuator (10) to actuator fitting with knob (7). Secure outboard end of actuator to actuator lever with pin (1). Connect actuator power cable (9) to receptacle on actuator.

h. Open soundproofing in cabin roof Sta. 112.80 and uncover receptacle for hoist power cable (5). Connect hoist power cable to receptacle and hand tighten.

CAUTION

Do not operate hoist with boom in stowed position.

i. If hoist boom (7, figure 14-1) is in the stowed (upright) position, remove pin (17), place boom in extended position and reinstall pin.

CAUTION

Ensure that boom does not strike airframe when actuating boom in and out of cabin.

j. Adjust turnbuckle (8) so that traction sheave assembly (1) just brushes against the cabin door upper rubber molding when the boom (7) is rotated inboard. Safety turnbuckle with lockwire (C155) or safety clip.

k. Reconnect battery.

l. Perform operational check (paragraph 14-4).

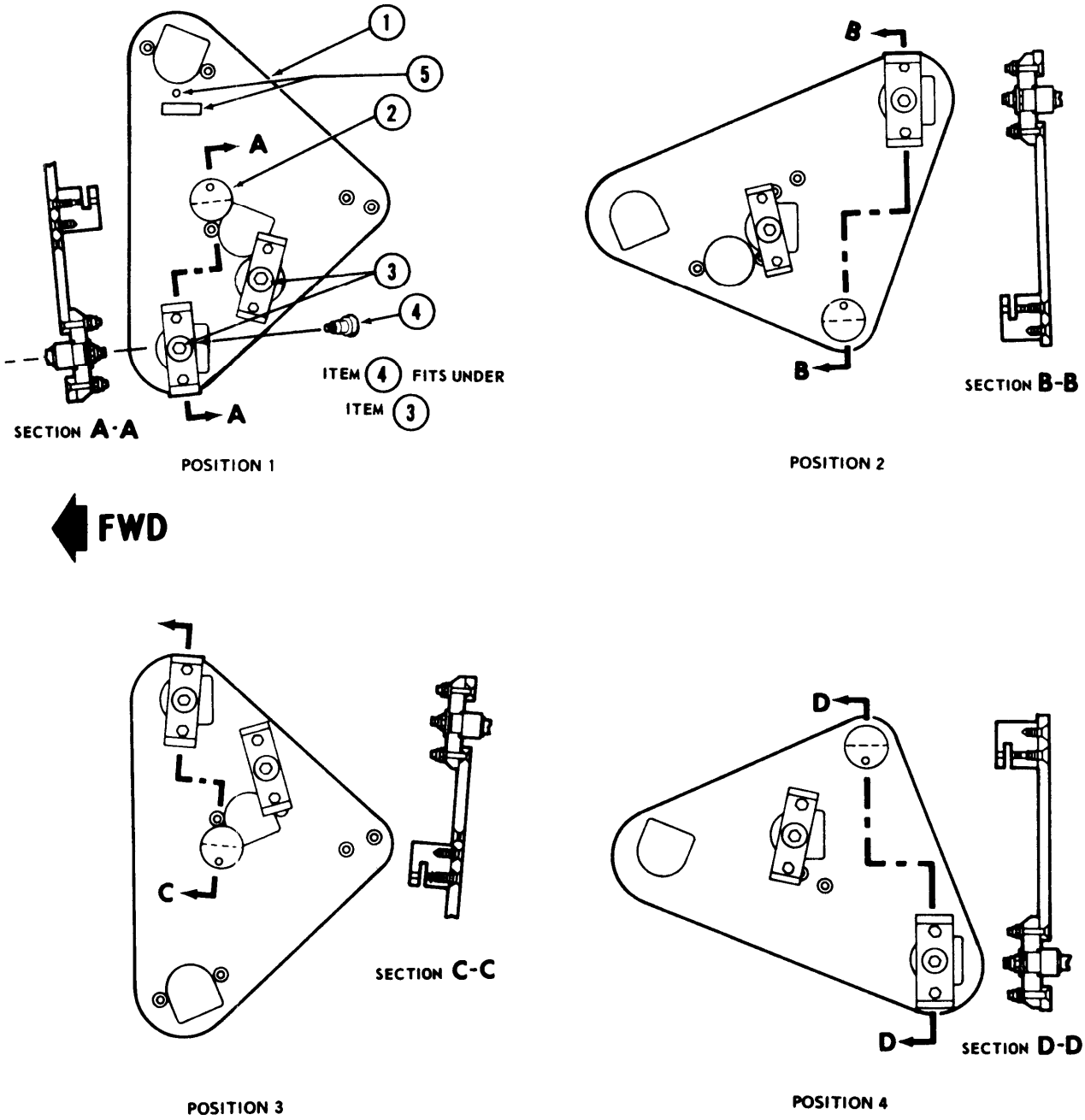

1. Actuator plate
2. Actuator fitting
3. Adapter fitting
4. Stud adapter
5. Hole and stencil
   (for screw forward position only)

Figure 14-3. Hoist Actuator Plate Installation

14-14. TRACTION SHEAVE ASSEMBLY.

14-15. Description — Traction Sheave Assembly. The traction sheave assembly (1, figure 14-1) is located on the end of the hoist boom (7). The sheave assembly (figure 14-4) consists of a motor, gear housing, gear train, and pulley. The pulley is driven by the electric motor through a series of reduction gears and incorporates a roller clutch which drives the pulley when the hoist cable is played-out, but permits the pulley to free-wheel should speed of the hoist ever exceed speed of traction sheave.

14-16. Removal — Traction Sheave Assembly.

a. Apply electrical power to the rescue hoist and extend hook and bumper assembly (37, figure 14-1) approximately **12** inches. Disconnect electrical power to hoist assembly.

b. Remove boom covers (2) from top of boom (7) by removing screws and washers.

c. Disconnect sheave power cable (6) at connector bracket along left side of boom (7). Remove two retaining clamps on left side of boom.

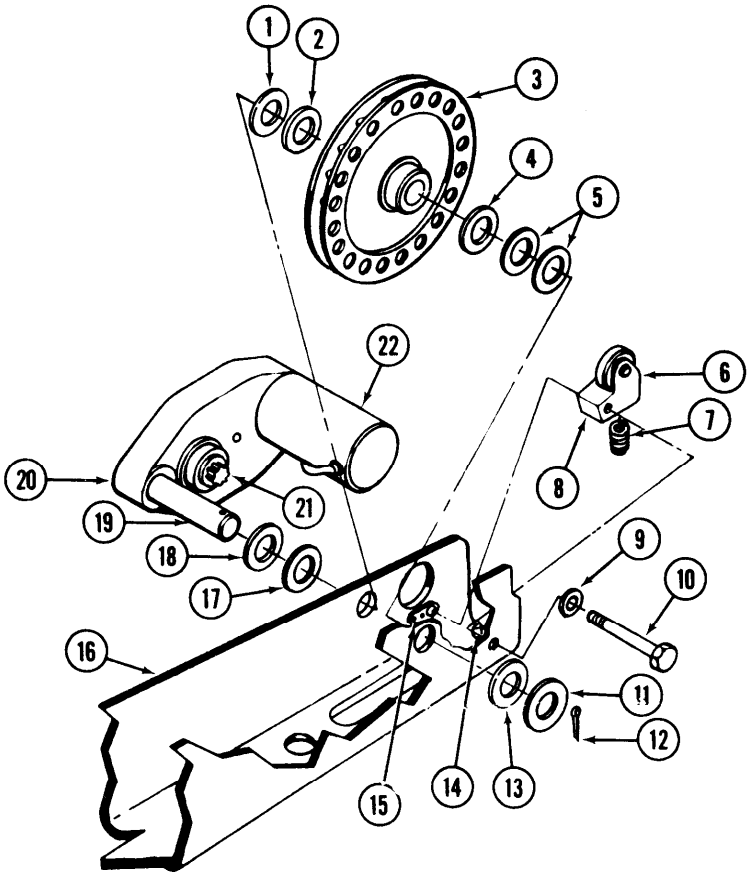

1. Shim
2. Thrust washer
3. Pulley — sheave
4. Thrust washer
5. Shim
6. Pressure roller assembly
7. Spring
8. support
9. Washer — thin steel
10. Bolt
11. Washer – thin CRES
12. Cotter pin
13. Shim
14. Roll pin — spring
15. Nutplate
16. Boom
17. Washer — thin CRES
18. Shim
19. Shaft
20. Housing assembly
21. Gear — power drive
22. Motor — electric

Figure 14-4. Traction Sheave Assembly

d. Remove cotter pin (12, figure 14-4), washer (11), shim (13) from end of shaft (19). Record shim thickness and tag for reinstallation.

e. Carefully remove housing assembly (20) and shaft (19) by working out of boom (16).

NOTE

Exercise care to prevent dropping shims (1, 5 and 18), thrust washers (2 and 4), sheave pulley (3), and washers (17) which will be freed as the shaft (19) is retracted from the boom (16). Record shim thickness and tag for reinstallation.

f. To remove pressure roller assembly (6), cut lockwire on head of bolt (10) and remove with washer (9). Lift roller assembly from boom (16) and spring (7).

14-17. Inspection — Traction Sheave Assembly. a. Inspect housing assembly (20, figure 14-4) for damage and security of motor (22) and sheave motor cable. Inspect relay, filter and filter box on outboard side of housing assembly cover for security and condition.

b. Inspect pressure roller assembly (6) for worn bearing, spring (7) for condition, and bearing support (8) for burrs, nicks, dents, scratching or scoring.

c. Inspect shaft (19) of housing assembly (20) and inner race of sheave pulley (3) for burrs, nicks, dents, scratching or scoring. No repairs permitted.

d. Inspect boom (16) and housing assembly (20) for cracks. No cracks permitted.

e. Inspect teflon faces of thrust washers (2 and 4) for condition.

14-18. Repair or Replacement — Traction Sheave Assembly (AVIM) a. If traction sheave assembly does not meet inspection requirements, replace without repair. Send part to depot maintenance.

b. Replace damaged or worn thrust washers (2 and 4, figure 14-4) sheave pulley (3), shims (1, 5, 13, and 18), pressure roller assembly (6), spring (7), and bolt (10).

14-19. Installation—Traction Sheave Assembly. a. Fit spring (7, figure 14-4) into hole in support (8) of the pressure roller assembly (6). Position pressure roller assembly into boom (16) depressing spring onto roll pin (14) and aligning bolt holes. Secure the pressure roller assembly with bolt (10) and thin steel washer (9). Safety head of bolt to boom using lockwire (155).

b. Prepare traction sheave assembly for installation by removing shims (1, 5, 13, and 18), thrust washers (2 and 4), pulley (3), and washers (11 and 17) from shaft (19).

NOTE

For the following procedures refer to recorded shim dimensions taken during removal.

c. Place shim (18) and thin CRES washer (17) on shaft (19). Insert shaft part way through hole on left side of boom (16). Place shim (1), thrust washer (2) and pulley (3) onto shaft, then remaining thrust washer (4) and two shims (5); teflon faces of thrust washers shall be against pulley. Insert winch cable into groove of pulley (3) and under pressure roller assembly (6).

d. Work shaft (19) through boom (16) aligning power drive gear (21) with 1.0 inch hole in boom. Engage gear teeth of power drive gear with gear teeth on pulley (3). Temporarily secure traction sheave assembly to boom with a shim (1 3), thin CRES washer (11), and cotter pin (12).

e. Check for correct shimming of pulley (3) and power drive gear (21) as follows:

(1) Slide pulley (3) back and forth on shaft (19) to determine end play. Adjust thickness of shims (1 and 5) to limit end play **0.002 TO 0.010** inch, center pully in boom within **0.015** inch and to provide clearance for pressure roller assembly (6). (See figure 14-5, Note 1.)

(2) Align gear teeth of power drive gear (21, figure 14-4) and pulley (3). Adjust thickness of shims (13 and 18) to align gear teeth mesh and limit pulley final end play to **0.005** inch maximum as shown in figure 14-5, Note 2.

f. Secure traction sheave assembly (1, figure 14-1) to boom (7) with required shims (13, figure 14-4), thin CRES washer (11) and cotter pin (12).

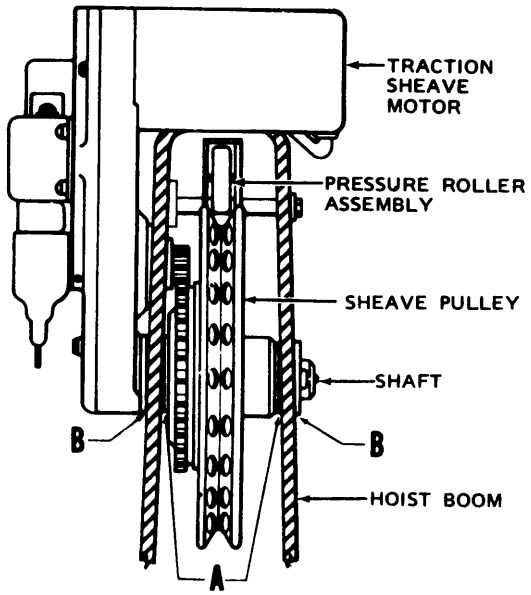

NOTE

1. **SHIM AT POINTS A TO CENTER SHEAVE PULLEY WITHIN 0.015 INCH AND PROVIDE 0.002 TO 0.010 INCH END PLAY.**
2. **SHIM AT POINTS B TO ALIGN GEAR TEETH MESH AND LIMIT PULLEY FINAL END PLAY TO 0.005 INCH MAXIMUM.**

205072-1011

Figure 14-5. Shimming Traction Sheave Assembly

Connect sheave motor cable (6, figure 14-1) to receptacle on boom (7) and secure. Secure cable to boom with clamps.

h. Ensure that hoist cable (3) is correctly installed on sheave pulley and reinstall boom covers (2).

i. Perform operational check (paragraph 14-4).

14-20. BOOM.

14-21. Description — Boom. The boom (7, figure 14-1) is fabricated from **0.160** inch 7075 aluminum alloy and provides mounting locations for the traction sheave assembly (1), boom covers (2), guillotine assembly (4), guide tube (5), turnbuckle (8), pulley(9), trigger assembly (36), limit switch (38), and the routing of the hoist cable (3).

14-22. Removal — Boom. a. Operate hoist and extend hook and bumper assembly (37, figure 14-1) **12 to 24** inches.. Disconnect electrical power to rescue hoist.

b. Disconnect guillotine power cable (34) from control box (19). Disconnect sheave power cable (6) at connection on left side of boom (7) and remove guide bolt (16) with clamp.

c. Remove hook and bumper assembly (37) from hoist cable (3) (paragraph 14-117).

d. Remove boom covers (2, figure 14-1) from top of boom (7) by removing attaching screws and washers.

e. Remove one upper, middle and lower rollers (40, 42 and 43) from end of boom (7), (paragraph 14-142).

f. Remove pressure roller assembly at traction sheave assembly (1, figure 14-1), (paragraph 14-12.)

g. Remove upper support and anvil from guillotine assembly (4, figure 14-1), (paragraph 14-35).

h. Remove hoist cable (3, figure 14-1) from traction sheave assembly (1), guide tube (5) and pulley (9). Loosen or remove guide tube as required.

i. Support boom (7) and disconnect turnbuckle (8). Remove retaining pin (17) and separate boom from hoist cable (3) and post (15).

j. Wrap and protect hoist cable (3) and install protective covers and plugs over open electrical connectors.

14-23. Inspection — Boom. a. Inspect boom (7, figure 14-1) for nicks, scratches or other damage.

b. Inspect attaching parts on boom (7) for security, corrosion, proper installation, and damage. Check nutplates for thread damage or looseness.

c. Inspect guide tube (5), turnbuckle (8) and clevis ends for damage and security.

14-24. Repair or Replacement— Boom. a. Polish out nicks and scratches using No. 400 grit abrasive cloth or paper (C1). Touchup repaired area using chemical film material (C62) and primer coating (C206).

b. Replace damaged hardware and nutplates,

c. Replace guide tube (5, figure 14-1) if bent, distorted or cracked.

14-25. Installation — Boom. a. With boom covers (2, figure 14-1) removed, place boom (7) to post (15) with open side up. Align mounting holes and install retaining pin (17).

b. Align clevises and connect turnbuckle (8). Adjust turnbuckle so that top surface of traction sheave assembly (1) just brushes against upper rubber molding of cabin door when boom is rotated inboard or outboard. Safety turn buckle with lockwire (C155) or safety clip.

c. Unwrap loose end of hoist cable (3) and feed through guide tube (5) and over guillotine assembly (4) with upper support and anvil removed. Feed remaining cable over pulley of traction sheave assembly (1); down between upper, middle and lower rollers (40, 42 and 43), and trigger assembly (36).

d. Install hook and bumper assembly (37) onto end of hoist cable (3), (paragraph 14-1 22).

e. Check to ensure that hoist cable (3, figure 14-1) is in groove of pulley (9). Route loose end of sheave power cable (6) to connector on left side of boom (7) and connect. Install guide bolt (16) through power cable clamp and boom, ensure that hoist cable is between bolt and pulley.

f. Install pressure roller assembly at traction sheave assembly, (paragraph 14-19).

g. Install upper, middle and lower rollers (40, 42 and 43, figure 14-1) in side plates (41) on end of boom (7), (paragraph 14-145).

h. Install anvil and upper support in guillotine assembly (4, figure 14-1), (paragraph 14-39.) Connect guillotine power cable (34, figure 14-1) to control box (19).

i. Check guide tube (5) for alignment to hoist cable (3) and that cable is free from possible abrasion along length of boom (7). Install boom cover (2) and secure with screws and washers.

j. Perform operational check, (paragraph 14-4).

14-26. HOIST CABLE.

14-27. Description — Hoist Cable. The rescue hoist assembly is equipped with a 3/16 inch diameter 19 X 7 extra flexible spin resistant stainless steel cable.

Pre-maintenance requirements for inspection and replacement of hoist cable

Conditions	Requirements
Model	All
Part No. or Serial No.	All
Special Tools	(T5)
Test Equipment	None
Support Equipment	BL6423 Supplement Kit (Furnished with BL8439 Hoist Cable)
Minimum Personnel Required MOS	Two
Consumable Materials	(C92) (C129) and Lint Free Cloths
Special Environmental Conditions	Dust Free

14-28. Removal — Hoist Cable. a. Remove boom covers (2, figure 14-1) from boom (7) by removing attaching screws and washers.

b. Remove hook and bumper assembly (40), (paragraph 14-117).

c. Operate rescue hoist until hoist cable (3, figure 14-1) is fully extended (paragraph 14-4).

WARNING

Use wrench (T5) to loosen set screw. Allen type wrench will strip head of set screw if used. Wrench is provided with replacement hoist cable in the BL6423 supplemental kit (instructions, wrench and new set screw).

d. Using wrench (T5) loosen set screw (figure 14-6) on storage drum flange and remove inboard end of hoist cable.

e. Remove rubber pressure roller (7, figure 14-7) below primary pulley (13). by removing screws (11), lockwashers (10) and cover (12). Thread one screw into end of the tension roll shaft (9). Using the screw as a puller, and maintaining hand pressure on the roller to keep it centered, withdraw the shaft to free the roller.

f. Remove remainder of hoist cable (1) from primary and secondary pulleys (13 and 14), and storage drum (2) by unwinding manually. Remove cable from boom (7, figure 14-1).

14-29. Inspection — Hoist Cable. Clean the complete length of hoist cable using a clean, heavy, lint free cloth held firmly around cable. The cloth will aid in the removal of foreign particles and in detection of broken wires. The broken wire ends will snag the cloth, preventing the break from being overlooked.

14-30. Inspection — Hoist Cable (Installed or Removed). a. Inspect hoist cable (3, figure 14-1) for clean condition, broken wires, kinks, abrasion, bird caging, and interference anywhere along its routing as follows:

NOTE

Internal wear caused by grit, dirt, sand, etc., embedded between the hoist cable wires is extremely difficult to detect. Preventive maintenance is the best procedure. The cable should be carefully wiped to remove gritty material as it is reeled in during inspection. Prolonged use of cable embedded with gritty materials will result in broken wires.

(1) Abrasion of hoist cable is caused by contact with other cable sections or any material that may contact the cable such as helicopter structural members; auxiliary equipment or almost any abrasive surface. Dirt, sand, grit and other foreign particles

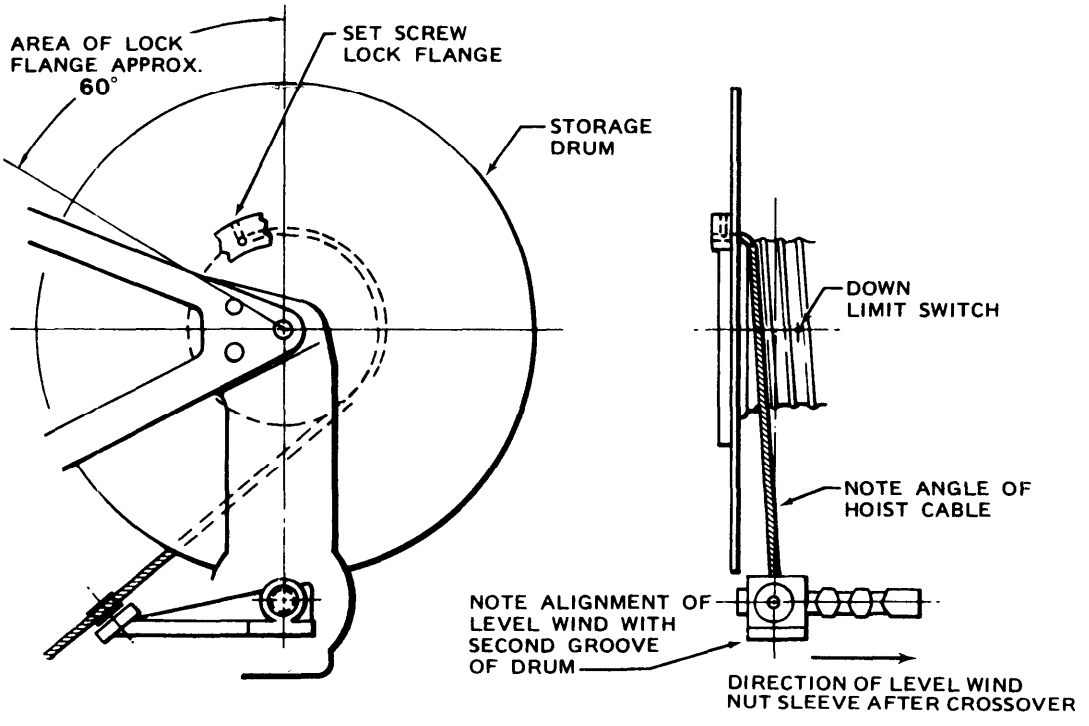

Figure 14-6. Hoist Cable to Storage Drum Attachment

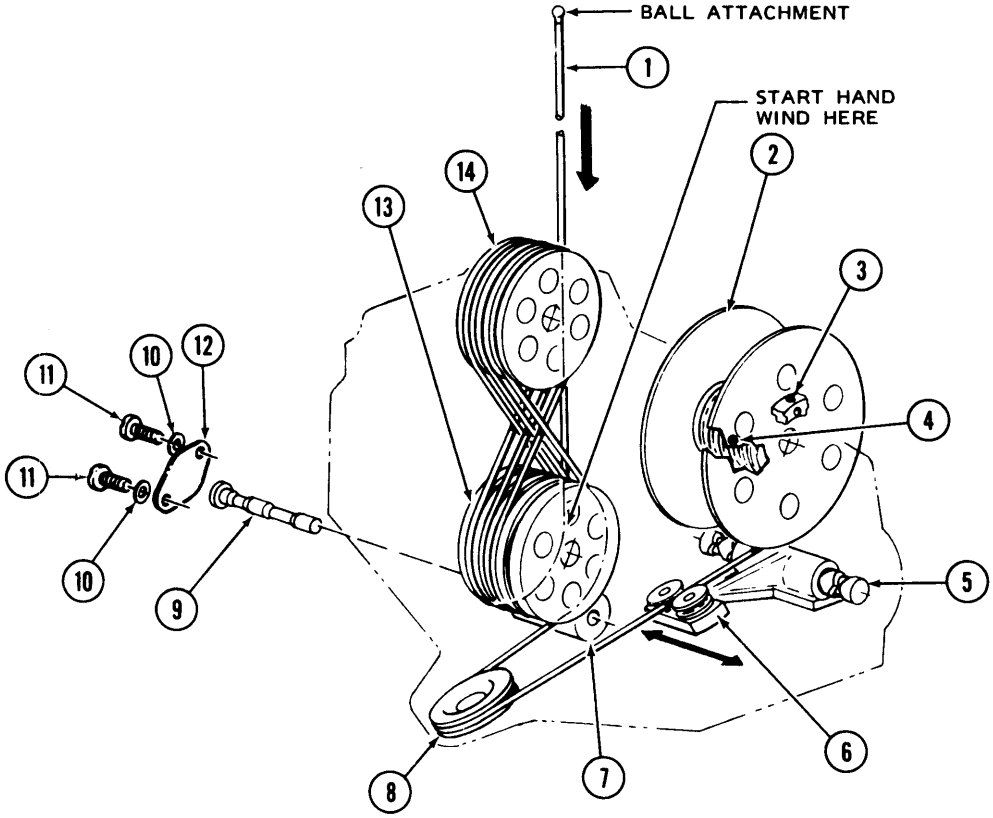

1. Hoist cable
2. Storage drum
3. Lock flange
4. Actuator pins — down limit switch
5. Level wind shaft
6. Rollers — level wind guide and
7. Rubber pressure roller
8. Idler pulley
9. Tension roll shaft
10. Lockwashers
11. Screws
12. Cover
13. Primary pulley
14. Secondary pulley

Figure 14-7. Hoist Drive Unit - Cable Routing

also are frequent cause of abrasion. Nicking, scarring and scrubbing are also referred to as abrasion. Abrasion due to cable being constantly dragged over a fixed point is usually continuous and confined to a particular section of the cable circumference. Worn guide tube (5, figure 14-1) and guide bolts (16) are a common cause of this type of abrasion. Operation of the hoist at excessive flight angles which cause the cable to constantly abrade against the middle or lower rollers (42 and 43) or side plates (41) also contributes to this type of abrasion.

(2) Abrasion caused by an improperly adjusted or defective level wind shaft (5, figure 14-7) is evidenced by localized worn sections of the outer hoist cable wires. These localized sections can be traced to the crossover point of the cable as it is wound on the storage drum (2). The abrasion results from scrubbing contact with the adjacent wrap of cable and the drum flange. Proper adjustment of the level wind shaft during cable installation will prevent this type of wear.

(3) Overloading of hoist cable will normally result in broken wires. However, broken wire cores may also result from overload. Necking-down of a section of cable is an indication of broken core wires. A cable that has been knowingly overloaded should be replaced immediately even if no obvious physical damage is detected.

(4) Kinks are usually man-made defects in a hoist cable, caused by a loop in the cable being pulled up tight, resulting in a sharp, permanent bend in the cable. Kinks are identified as two types, open and closed. An open kink is caused by pulling a loop tight, creating a sharp permanent bend which tends to open the lay of the cable. A closed kink is caused in the same manner, but creates a sharp permanent bend which tends to close the lay of the cable. Continued use of a kinked cable creates additional abrasion and subsequent early failure of the cable. A kinked cable is cause for replacement.

(5) A bird caged cable has stretched or untwisted the outer wraps of wire strands. Severe bird caging will result in a small cocoon being formed by the outer cable strands.

b. Do not attempt any repair to hoist cable. No broken wires, strands kinking, corrosion, or birdcaging of the cable is allowed. Flat spots on the outer cable strands is evidence of cable misrouting or misalignment. Cables with flat spots worn into the outer strands should be replaced and routing and cable alignment (under tension) should be checked. Cable should not touch the anvil or knife in the guillotine assembly, pulley guide bolt or other items. Pulleys and rollers must turn freely and not be frozen or jammed. Cable guards on primary and secondary pulleys should be checked to ensure a **one-sixteenth** inch clearance exists from cable to guards (2, 5, 7, and 8, figure 14-8). Check to ensure correct routing of the cable over the storage drum (2, figure 14-7), and primary and secondary pulleys (13 and 14).

WARNING

Do not substitute any other hoist cable for the correct cable part number (BL8439).

c. Visually inspect storage drum (2, figure 14-7), level wind guide and rollers (6), rubber pressure roller (7), idler pulley (8), and primary and secondary pulleys (13 and 14) for damage and corrosion.

d. Check for free operation of down limit switch actuator pin (4) in third groove of storage drum (2). Do not depress pin below surface of drum groove.

14-31. Repair or Replacement — Hoist Cable (AVIM)

WARNING

No repairs are permitted to the hoist cable (1, figure 14-7).

a. When damage exceeds shallow cable marks to the storage drum (2), level wind guide and rollers (6), idler pulley (8), and primary and secondary pulleys (13 and 14) send hoist drive unit to Depot for repair.

b. When tears are evident or the rubber pressure roller (7) does not provide sufficient pressure to maintain hoist cable position on primary drum (13) it should be replaced (paragraph 14-79).

c. When hoist assembly is to be operated in a salt-laden environment, it is recommended that a new hoist cable (1, figure 14-7) be treated as follows before installation.

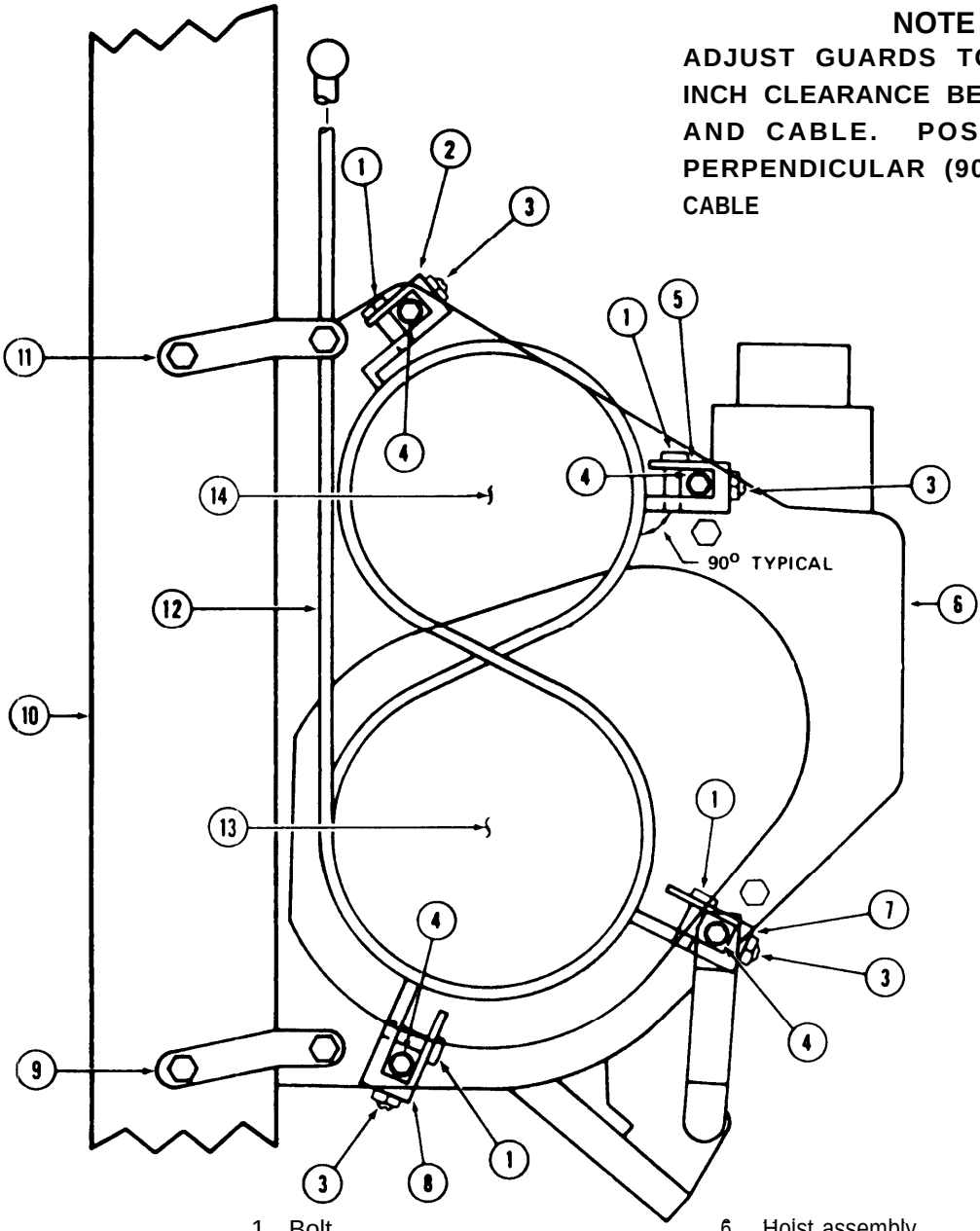

1. Bolt
   Washer
   Safety wire
2. Guard
3. Screw
   Washer
   Nut
4. Spacer
5. Guard
6. Hoist assembly
7. Guard
8. Guard
9. Lower bracket
10. Hoist post
11. Upper bracket
12. Hoist cable
13. Primary pulley
14. Secondary pulley

Figure 14-8. Cable Guard Installation

(1) Treat the ball attachment end of new hoist cable with Class 1 or 1A corrosion preventive compound (C92) prior to first use.

(2) Heat corrosion preventive compound to **150 T0 160** degrees F (66 to 71 degrees C). Immerse ball attachment end of hoist cable and adjoining **5.0** inches in compound for a minimum of 3 minutes. Cables treated in this manner have only a thin film of compound and must be further coated with compound to a minimum thickness of **0.002** inch.

(3) After installation of hoist cable and reinstallation of hook and bumper assembly, wipe off compound above bumper guard.

14-32. Installation — Hoist Cable.

WARNING

Do not substitute any other hoist cable for the correct cable part number (BL8439).

CAUTION

Protect hoist cable from damage by storing bulk cable in a container during installation. Do not allow cable to kink or bend. Check to ensure that the cable is under tension and properly aligned with the guillotine assembly.

NOTE

Due to the relatively low hoist cable tension which exists at the storage drum, small gaps between cable wraps may be observed after reel in. These gaps are allowable; however, the cable should be held snugly on the drum. Any loosening or snarling of the cable shall be cause for rejection.

a. Unwind approximately 25 feet of hoist cable (3, figure 14-1) from coil, starting with the red painted soldered end.

b. If not previously accomplished remove boom covers (2), pressure roller attraction sheave assembly **(1)** Upper support and anvil of guillotine assembly (4), guide bolt (16) at pulley (9), and one upper, middle and. lower roller (40, 42 and 43), (paragraph 14-16).

WARNING

Ensure that the hoist cable (3, figure 14-1) is in pulley groove of traction sheave assembly (1) and not over guide pin or cable failure may occur.

Ensure that the hoist cable (3) is in groove of pulley (9) and not over the cable guide bolt (16) or cable failure may occur.

c. Feed hoist cable (3) between remaining lower, middle and upper rollers (43, 42 and 40), over pulley of the traction sheave assembly (1), through the guillotine assembly (4), guide tube (5), over pulley (9), and down to hoist drive unit (30).

d. Loosen four hoist cable guards (2, 5, 7, and 8, figure 14-8) and swing out of the way of primary and secondary pulleys (13 and 14).

e. Pull hoist cable (1, figure 14-7) into outboard groove of the primary pulley (13) (groove farthest from the storage drum (2) side of hoist drive unit).

f. Begin wrapping hoist cable (1), keeping constant tension applied; work cable onto secondary and primary pulleys (14 and 13) in figure eight fashion. The pulleys are fully wound when they have three complete wraps.

g. Route hoist cable (1) from wrapped secondary and primary pulley (14 and 13) around idler pulley (8) then temporarily hold with tension until completion of step h.

h. Pack grooves of tension roller shaft (9) with a coating of grease (C129). Install rubber pressure roller (7), tension roller shaft and secure with cover (12), lock washers (10) and screws (11).

i. Align center of level wind (figure 14-6) with centerline of second groove in storage drum. Angle of cable should approximate angle of grooves in storage drum.

WARNING

Use spline wrench (T5) to tighten set screw. Allen type wrench will strip head of set screw, if used. Wrench is provided with replacement hoist cable in the BL6423 supplement (instructions, wrench and new set screw).

j. Route hoist cable (1, figure 14-7) between level wind guide and rollers (6) and around outboard groove of storage drum (2) from lower side, and into lock flange (3). Install set screw into lock flange and tighten using a spline wrench (T5), secure end of cable. Do not permit soldered end of cable to extend outside of the lock flange.

k. Manually turn storage drum (2) to take up remaining portion of slack hoist cable (1) tightening each wrap on drum as winding progresses.

WARNING

Ensure figure eight wraps on primary and secondary pulleys (13 and 14) are correct as shown in figure 14-7 and 14-8.

NOTE

At this point the cable will depress the down limit switch actuator pin (4, figure 14-7) in third groove of the storage drum (2) and the rescue hoist can be operated electrically.

l. Install and reposition the four cable guards (2, 6, 7, and 8, figure 14-8). Adjust guards to ensure **one sixteenth** inch clearance between guards and hoist cable (12) and that they are **90** degrees to cable.

m. Check for movement of down limit switch actuator pin (4, figure 14-7) by reeling out the hoist cable (1) in and out of third groove in storage drum (2), while maintaining **5** pounds tension on the cable. Three wraps should remain on storage drum.)

n. Recheck lay of the hoist cable (1) on storage drum (2) as the cable is reeled in.

o. Operate rescue hoist electrically until three layers of hoist cable (1) are wrapped on storage drum **(2).** Layers must be smoothly and uniformly wrapped, if necessary repeat procedures starting with preceding step i.

CAUTION

Stop hoist cable travel before ball attachment contacts trigger assembly (1, figure 14-1).

p. Continue operating rescue hoist and reel in remainder of extended hoist cable (3) until ball attachment on cable end is within **12 TO 24** inches of boom (7).

q. install hook and bumper assembly (40), (paragraph 14-122).

r. Complete installation of hoist cable (3, figure 14-1) along boom (7) in accordance with paragraph 14-25, step e. and subsequent.

s. Perform operational check (paragraph 14-4).

14-33. GUILLOTINE AND SUPPORT

14-34. Description — Guillotine and Support. Guillotine assembly (4, figure 14-1) is located near the outboard end of boom (7). The guillotine functions as an emergency cable cutter actuated by the HOIST CABLE CUT switches located on the pilots pedestal and the hoist control box (19).

14-35. Removal — Guillotine and Support.
a. Turn battery switch to OFF position.

WARNING

The primer charge (6, figure 14-9) is an explosive device. Use extreme caution when handling primer charge. Spark or static producing clothing is prohibited. Anytime guillotine power cable is disconnected, install aluminum foil shorting strips between pins of cable connector to prevent accidental firing.

b. Disconnect guillotine power cable (34, figure 14-1) at control box (19). Use aluminum foil shorting strips between pins of cable connector.

c. Remove boom covers (2) from top of boom (7) by removing attaching screws and washers.

d. Cut lockwire and remove four screws attaching guillotine upper support (1, figure 14-9) and anvil (2).

e. Lift out anvil (2) and barrel (5) as separate parts and disconnect wires for primer charge (6). Use aluminum foil shorting strips between wires of primer charge (6).

f. Remove retainer (8) from barrel (5) and primer charge (6) from retainer.

g. Remove knife (3) from barrel (5) and remove ends of shear pin (4) from barrel and knife.

WARNING

Cleaning materials are flammable and toxic. Avoid skin contact and breathing of solvent vapors.

14-36. Cleaning — Guillotine and Support. Clean powder deposits from knife (3, figure 14-9) and chamber of barrel (5) using a cloth dampened with solvent (C261). Remove corrosion deposits using crocus cloth (C68).

14-37. Inspection — Guillotine and Support (Removed). a. Inspect upper and lower supports (1 and 7, figure 14-9), anvil (2), knife (3), shear pin (4), barrel (5), and retainer (8) for evidence of damage or corrosion. Parts that cannot be cleaned and returned to a serviceable condition shall be replaced.

b. Inspect primer charge (6) for corrosion, damage and deteriorated wiring. Record charge date of manufacture, not to exceed 5 years.

c. Inspect boom (7, figure 14-4) for damage in area of guillotine assembly (1) and for corrosion deposits.

d. Inspect guillotine power cable (34) for continuity, wiring for fraying, wear and abrasion.

14-38. Repair or Replacement — Guillotine and Support. a. Replace all parts that are cracked and those that are corroded and cannot be cleaned.

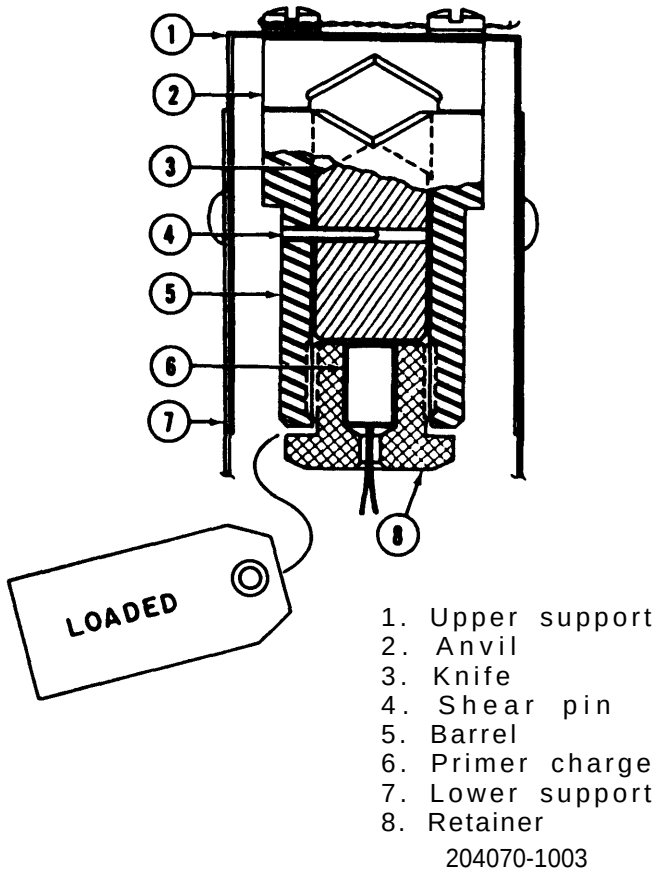

Figure 14-9. Guillotine Assembly and Support

b. Repair or replace defective electrical wiring and connectors, as required.

c. Replace primer change (6, figure 14-9) if any doubt exists to its serviceability, or service life.

14-39. Installation — Guillotine and Support.

a. Clean all parts to ensure they are free of dirt and corrosion deposits prior to installation (paragraph 14-36). Apply corrosion preventive oil (C90) to cable cutter assembly.

b. Install knife (3, figure 14-9) into barrel (5). Align mounting holes for shear pin (4) and install new shear pin.

c. Perform a stray voltage check between pins A and B of receptacle (J269) on hoist control box (figure F-38).

d. Place new primer charge (6) into retainer (8) and screw retainer securely into barrel (5). Record charge date of manufacture in applicable records.

e. Connect wires of primer charge (6) to guillotine power cable (34, figure 14-1).

f. Position barrel (5, figure 14-9) in lower support (7) and install in boom (7, figure 14-1) under hoist cable (3).

g. Slide anvil (2, figure 14-9) into position on barrel (5) and install upper support (1). Align barrel and anvil to supports and install four screws and washers. Tighten screws securely and safety in pairs using lockwire (C155).

h. Secure lower support (7) to boom (7, figure 14-1) with two screws and washers, tighten securely.

i. Loosen upper two screws in lower support (7, figure 14-9). Apply a **40** pound (minimum) load to hook and and bumper assembly (37, figure 14-1), equally center guillotine assembly (4) and support hoist cable (3). Tighten screws securely after centering guillotine.

j. Install boom covers (2) and secure with screws and washers.

k. Remove aluminum shorting strips from connector of guillotine power cable (34). Connect cable (34) at control box (19).

14-40. GUIDE TUBE.

14-41. Description — Guide Tube. Guide tube (5, figure 14-1) is located in boom (7) below boom covers (2) and guides hoist cable (3) along the mid-length of the boom.

14-42. Removal — Guide Tube. a. Operate hoist and extend hook and bumper assembly (37, figure 14-1) 12 to 24 inches. Disconnect electrical power to rescue hoist.

b. Remove hook and bumper assembly (37), (paragraph 14-117).

c. Remove boom covers (2, figure 14-1) from top of boom (7) by removing attaching screws and washers.

d. Remove one upper, middle and lower roller (40, 42 and 43) from side plates (41). (Paragraph 14-142).

e. Remove pressure roller assembly at traction sheave assembly (1, figure 14-1), (paragraph 14-16).

f. Remove upper support anvil from guillotine assembly (4, figure 14-1). (paragraph 14-35).

g. Remove screws, washers and clamps attaching guide tube (5, figure 14-1) to boom (7). Lift hoist cable (3) and feed from boom and guide tube.

14-43. Inspection — Guide Tube. Inspect guide tube (5, figure 14-1) for security of mounting, corrosion, cracks, and loose or missing hardware.

14-44. Repair or Replacement — Guide Tube. a. Replace loose or missing hardware for guide tube (5, figure 14-1) and boom (7).

b. Replace guide tube (5) that is cracked, corroded, damaged, or distorted.

14-45. Installation — Guide Tube. a. Route hoist cable (3, figure 14-1)over pulley (9). Ensure that hoist cable is between pulley and adjacent guide bolt (16).

b. Route hoist cable (3) through guide tube (5), guillotine assembly (4), over sheave pulley of traction sheave assembly (1), then down through upper, middle and lower rollers (40, 42 and 43) and trigger assembly (36). Secure guide tube to brackets in boom (7) with clamps, screws and washers. Ensure ends of guide tube do not contact pulley (9) or guillotine assembly (4).

c. Reinstall hook and bumper assembly (37), (paragraph 14-122).

d. Reinstall upper, middle and lower rollers (40, 42 and 43, figure 14-1) in side plates (41), (paragraph 14-145).

e. Reinstall pressure roller to sheave pulley of the traction sheave assembly (1, figure 14-1), (paragraph 14-19).

f. Reinstall and adjust upper support and anvil to guillotine assembly (4, figure 14-1), (paragraph 14-39).

g. Check hoist cable (3, figure 14-1) to ensure there is no binding in guide tube (5) or at any other part along boom (7) length. Reinstall boom covers (2) and secure with screws and washers.

h. Perform operational check (paragraph 14-4).

14-46. POWER CABLES.

14-47. Description — Power Cables. The rescue hoist contains five power cables, the sheave power cable (6, figure 14-1), hoist power cable (18), actuator power cable (21), drive unit power cable (31), cable for control pendant (32), and guillotine power cable (34).

14-48. Removal — Power Cables. a. Place BATT switch in OFF position.

b. Disconnect power cable and plug from mating receptacle on control box (19, figure 14-1).

CAUTION

Use care not to twist, bend or damage contact pins and individual wires when disengaging or engaging plugs and receptacles.

c. Disconnect opposite end of power cable, remove attaching clamps, then remove cable.

d. Install protective covers on cable plugs and receptacles on control box (19).

14-49. Inspection - Power Cables. a. Inspect power cables for security and for loose or missing hardware.

b. Inspect power cables for broken, kinked, frayed, or worn wires. Check cable continuity.

14-50. Repair or Replacement — Power Cables. a. Replace loose or damaged hardware and clamps.

b. Repair or replace broken, kinked, frayed, and worn wires. Replace with wire of equivalent specification. Replace plugs and receptacles that are damaged. (Refer to Appendix F for wiring diagrams.)

14-51. Installation - Power Cables. a. Remove protective covers plugs and receptacles.

b. Connect power cable plug to mating receptacle on control box (19, figure 14-1).

c. Connect opposite end of power cable, install required clamp installations to support cable.

d. Perform operational check (paragraph 14-4).

14-52. QUICK DISCONNECT ADAPTERS.

14-53. Description — Quick Disconnect Adapters. The quick disconnect adapters (11 and 27, figure 14-1) are installed on both end of the post (15). The adapters are the quick release type that permit rapid installation or removal of the rescue hoist from roof and actuator plate stud (10 and 26).

14-54 Removal - Quick Disconnect Adapters. a. Remove upper adapter (11, figure 14-1) by removing bolt, washers and nut from support (12). Using a plastic mallet, tap adapter from support.

b. Remove lower adapter (27) by punching out steel spring pin in lower post support (28). Using a plastic mallet, tap adapter from support.

14-55. Inspection - Quick Disconnect Adapters. Inspect adapters (11 and 27, figure 14-1) for cracks, positive latching, corrosion, and security.

14-56. Repair or Replacement — Quick Disconnect Adapters. a. Replace adapters (11 and 27, figure 14-1) that are cracked, corroded, or will not provide a positive latch or do not have a smooth sliding locking collar.

b. No repairs permitted to adapters (11 and 27).

14-57. Installation - Quick Disconnect Adapters. a. Insert upper adapter (11, figure 14-1) into support (12) and align bolt holes. Secure adapter with bolt, washers and nut.

b. Insert lower adapter (27) into lower post support (28) and align pin holes. Secure adapter with new steel spring pin.

14-58. LOWER POST SUPPORT.

14-59. Description — Lower Post Support. The lower post support (28, figure 14-1) is fabricated from 2024 aluminum alloy and provides a mounting base for the lower end of post (15), actuator lever (24) and adapter (27).

14-60. Removal — Lower Post support. a. Remove rescue hoist (paragraph 14-6).

b. Disconnect drive unit power cable (31, figure 14-1) from control box (19). Install protective covers over plug and receptacle.

c. Disconnect hoist drive unit (30) from lower end of post (15) by loosening the two screws at upper bracket (20) and removing the two bolts, nuts and washers at the lower bracket (22). Swing hoist drive unit free of lower bracket.

d. Remove the two through bolts attaching the lower bracket (22) to the post (15). Using a plastic mallet tap bracket and actuator lever (24) from post.

e. Remove actuator lever bolt (29) and remove actuator lever (24) from lower post support (28).

f. Remove adapter (27) from lower post support (28) by punching out steel spring pin.

14-61. Inspection — Lower Post Support. Inspect lower post support (28, figure 14-1), brackets (20 and 22), actuator lever (24), and adapter (27) for corrosion, cracks, deformation, and security.

14-62. Repair or Replacement — Lower Post Support. a. Replace lower post support (28, figure 14-1), bracket (20 and 22), actuator lever (24), and adapter (27) that are corroded, cracked or deformed.

b. No repairs permitted to lower post support (28), bracket (20 and 22), actuator lever (24) and adapter (27).

14-63. Installation — Lower Post Support. a. Install adapter (30, figure 14-1) into lower post support (31), align pin holes and install new steel spring pin. Ensure pin does not protrude above support surface.

b. Position actuator lever (24) on lower post support (31) with flat portion of arm down, align bolt holes and install actuator lever bolt (32) with aluminum washer under nut.

c. Insert lower post support (31) into post (15), align bolt holes, position lower bracket (22) in place and secure to two through bolts. Install bolt with thin aluminum washer through hoist drive side of bracket and attach actuator power cable (21) and clamp installation under nut. Install remaining bolt through bracket from far side with tab for pin (23) chain under bolt head, and thin aluminum washer under nut.

d. Reposition hoist drive unit (33) to lower bracket (22) and install two bolts (heads inboard) with thin aluminum washers and nuts. Tighten nuts to **50 TO 70** inch-pounds after reviewing the following note.

N O T E

Mounting flange of hoist drive unit is installed outboard on near side of lower bracket (22) clevis and inboard on opposite side. (Reference mounting at upper bracket (20).) Shim, as required, to eliminate preload in excess of 0.005 inch.

e. Remove protective covers and connect drive unit power cable (34) to mating receptacle on control box (19).

f. Install rescue hoist (paragraph 14-13).

g. Perform operational check (paragraph 14-4).

14-64. POST AND LOCKNUT.

14-65. Description — Post and Locknut. The post (15, figure 14-1) is fabricated from 2024 aluminum alloy tubing and provides the primary attachment and mounting locations for the rescue hoist components.

14-66. Removal — Post and Locknut. a. Remove rescue hoist (paragraph 14-6).

b. Disconnect turnbuckle (8, figure 14-1) from boom (7) or fitting (14) on post (15).

c. Remove nut, bolt and washer securing fitting (14) to post (15). Grasp locknut (13) and lift or turn to remove support (12) from post. Slide fitting from post.

d. When post (15) is to be replaced refer to applicable paragraphs for removal of parts.

14-67. Inspection – Post and Locknut. Inspect adapter (11, figure 14-1), support (12), locknut (13), fitting (14), and post (15) for corrosion, cracks, damage, missing hardware, and security.

14-68. Repair or Replacement — Post and Locknut. a. Replace adapter (11, figure 14-1), support (12), locknut (13), fitting (14), and post (15) that are corroded, cracked or damaged.

b. No repairs permitted to adapter (11), support (12), locknut (13), fitting (14), and post (15).

c. Replace loose, missing or damaged hardware.

14-69. Installation — Post and Locknut. a. When adapter (11, figure 14-1) requires replacement refer to paragraph 14-54.

b. Thread locknut (13, figure 14-1) onto support (12) to upper end of slot.

c. Place fitting (14) on post (15) and insert support (12). Align fitting, post and support bolt holes and install bolt with thin aluminum washer under nut.

d. When new post (15) is to be installed refer to applicable paragraphs for installation of parts.

e. Connect clevises of turnbuckle (8) to boom (7) and fitting (14) with pins, two thin aluminum washers and cotter pins.

f. Install rescue hoist (paragraph 14-13).

14-70. CONTROL BOX.

14-71. Description — Control Box. The control box (19, figure 14-1) serves as the control center for entire rescue hoist system. It accepts signals from either the hoist operator or pilot to extend or retract rescue boom, and reel out or reel in cable. The pilot has priority in hoist operation and can override hoist operators actions at any time. In addition, special circuitry provides a continuously variable output voltage which is applied to hoist motor to permit operator to adjust cable speed to suit the mission. Since the variable output voltage limits cable speed to approximately 80 feet-per-minute maximum, provision is made to apply full line voltage to the motor to obtain the rated cable speed of 100 fpm. It should be noted that the pilot does not have the variable speed feature at his disposal, but is limited to 100 fpm operation only. Other circuits within the control box assembly supply operating power to the boom actuator and the traction sheave assembly. There is also a cable cutter actuating switch and a channel for operation of an intercom relay.

14-72. Removal — Control Box. a. Disconnect electrical power to rescue hoist.

b. Disconnect the five attaching power cable plugs from mating receptacles on control box (19, figure 14-1), (paragraph 14-48).

c. Install protective covers over power cable plugs and receptacles on control box (19, figure 14-1).

d. Remove four mounting screws and washers attaching control box (19) to mounting angle (33) on post (15). Remove control box from post.

14-73. Inspection — Control Box. a. Inspect control box (19, figure 14-1) and mounting angles (33) for corrosion, dents, scratches, cracks, loose or missing hardware, and security.

b. Inspect switches and receptacles on control box (19) for security, damage and general condition.

c. Inspect attaching power cables (paragraph 14-49).

14-74. Repair or Replacement — Control Box (AVIM). a. If control box (19, figure 14-1) shows evidence of damage, replace.

b. Replace mounting angles (33) that are corroded or cracked. Replace loose, missing or damaged hardware.

14-75. Installation — Control Box. a. Position mounting angles (33, figure 14-1) to post (15). align bolt holes and secure with two bolts, thin aluminum washers and nuts.

b. Position control box (19) to mounting angles (33), align screw holes and secure with four screws and thin aluminum washers.

c. Remove protective covers from receptacles on control box (19) and plugs on power cables. Connect

218-260 0 - 88 - 18

power cable plugs to mating receptacles on control box. Safety plugs with lockwire (C155).

d. Perform operational check. (Refer to paragraph 14-4).

14-76. Testing — Control Box (AVIM). For other than functional check (troubleshooting) send control box (19, figure 14-1) to depot maintenance.

14-77. RUBBER PRESSURE ROLLER.

14-78. Description — Rubber Pressure Roller. The rubber pressure roller (7, figure 14-7) is located below the primary pulley (13) of the hoist drive unit and maintains hoist cable position on the pulley.

14-79. Removal — Rubber Pressure Roller. a. Remove screws (11, figure 14-7), lock washers (10) and cover (12) from hoist drive unit cover.

b. Install one screw (11) in threaded end of tension roll shaft (9) and utilize the screw to withdraw shaft from hoist drive unit.

c. Remove rubber pressure roller (7) as soon as it is free of the tension roll shaft (9) to prevent contaminating the roller with oil.

WARNING

Cleaning materials are flammable and toxic. Avoid skin contact and breathing of solvent vapors.

14-80. Cleaning — Rubber Pressure Roller. Clean tension roller shaft (9, figure 14-7) and rubber pressure roller (7) with a cloth dampened with solvent (C261).

14-81. Inspection — Rubber Pressure Roller. a. Inspect tension roller shaft (9, figure 14-7) for nicks, cracks, dents and pits. Dimensional check outside diameter of shaft, if less than **0.308** inch, replace.

b. Inspect rubber pressure roller (7) for cuts, tears and deterioration. When installed roller must apply friction pressure to hoist-cable (1).

c. Inspect cover (12) for distortion and damage.

14-82. Repair or Replacement — Rubber Pressure Roller. a. Replace rubber pressure roller (7, figure 14-7) if torn, deteriorated or does not apply friction pressure to hoist cable (1).

b. Replace tension roller shaft (9) when inspection limits are exceeded.

c. Replace cover (12) if distorted and replace lockwashers (10) and screws (11) if damaged.

14-83. Installation — Rubber Pressure Roller. a. Pack grooves in tension roller shaft (9, figure 14-7) with grease (C129).

b. Place clean rubber pressure roller (7) in position below primary pulley (13), align shaft holes. Press tension roller shaft (9) through hoist drive cover and into bore retaining roller.

c. Install cover (12) and secure with new lockwashers (10) and screws (11).

14-84. ADAPTER AND PLATE.

14-85. Description — Adapter and Plate. The actuator plate (8, figure 14-2) and adapter fittings (6) are convertible to allow installation of the rescue hoist in the four alternate positions.

14-86. Removal — Adapter and Plate. a. Remove knurled knob (7, figure 14-2) from actuator plate (8) and lift out end of actuator (10). Reinstall knob in plate.

b. Remove actuator plate (1) and then remove stud adapters (4) from floor. If plate was removed from forward position, reinstall an AN525-10R14 screw in floor. If actuator plate (1) is installed in the forward floor positions, remove the MS27039-1-22 screw (5) and install an AN525-10R14 screw.

c. Remove nuts and washers securing adapter fittings (3, figure 14-3) to floor studs and remove fittings.

14-87. Inspection — Adapter and Plate. Inspect adapter fittings (3, figure 14-3), actuator plate (1) and stud adapters (4) for cracks, corrosion, wear, and security.

14-88. Repair or Replacement — Adapter and Plate. Repair of parts is not recommended. Replace parts worn or damaged with new serviceable parts. Replace nuts having nylon or fiber inserts.

14-89. Installation — Adapter and Plate. a. When rescue hoist is to be installed in either of the forward positions remove the AN525-10R14 screw from cabin floor (STA. 77.80, BL21), (figures 14-2 and 14-3).

b. Install two stud adapters (4, figure 14-3) on cabin floor studs, according to selected rescue hoist position.

c. Install actuator plate (1) over the two stud adapters (4). Place adapter fittings (3) on shank of adapters and secure with washers and nuts.

d. If a forward position is being used, install an MS27039-1-22 screw (5) with AN960PD10L washer through outboard end of actuator plate (1) and into cabin floor.

e. Position end of actuator (10, figure 14-2) (either side may be up) to fitting on actuator plate (8) and secure with knurled knob (7). Secure outboard end of actuator to actuator lever (2) with pin (1).

14-90. ACTUATOR LEVER.

14-91. Description — Actuator Lever. The actuator lever (24, figure 14-1) is fabricated from 2024 aluminum alloy and acts as the pivot lever between the actuator (25) and rescue hoist, when moving hoist in or out.

14-92. Removal — Actuator Lever. a. Remove rescue hoist (paragraph 14-6).

b. Remove actuator lever bolt (29, figure 14-1), washer and nut from lower post support (28). Using a plastic mallet tap actuator lever (24) from support. Ensure that steel spring pin in lower support is flush to surface and will not contact lever.

14-93. Inspection — Actuator Lever. Inspect actuator lever (24, figure 14-1), lower post support (28) and actuator lever bolt (24) for corrosion, cracks, deformation and security.

14-94. Repair or Replacement — Actuator Lever. a. Replace actuator lever (24, figure 14-1) and actuator lever bolt (29) that are corroded, cracked or deformed.

b. No repairs permitted to actuator lever (24).

14-95. Installation — Actuator Lever. a. Position actuator lever (24, figure 14-1) on lower post support (28) with flat portion of arm down. Align bolt holes and install actuator lever bolt (29) with aluminum washer and nut.

b. Reinstall rescue hoist (paragraph 14-13).

14-96. HOIST DRIVE UNIT.

14-97. Description — Hoist Drive Unit. The hoist drive unit (30, figure 14-1) is powered by an electrical motor that drives a primary pulley through a reduction gear and load brake assembly. The primary pulley, in turn drives a secondary pulley. An integral cable storage drum is also driven by the primary pulley. Hoist cable, routing from the storage drum, passes through a level wind device, around a guide pulley, wraps around the primary and secondary pulleys in figure eight type style. A mechanically actuated down limit switch located in the hoist storage drum, halts the hoist when the cable is fully played-out. The hoist primary and secondary pulleys act as capstans. The drive unit assembly incorporates a self contained lubrication system.

Pre-maintenance requirements for hoist drive unit

Conditions	Requirements
Model	All
Part No. or Serial No.	All
Special Tools	(T5)
Test Equipment	None
Support Equipment	BL6423 supplement kit (furnished with BL8439 Hoist Cable:)
Minimum Personnel Required MOS	Two
Consumable Materials	(C1), (C62), (C206), (C155), (C261)
Special Environmental Conditions	Temperature/ Dust Free

14-98. Removal — Hoist Drive Unit. a. Operate rescue hoist until hoist cable is fully extended. Allow cable to coil in a protected container while operating hoist to protect cable (paragraph 14-4.)

WARNING

Use spline wrench (T5) to loosen set screw. Allen type wrench will strip head of set screw if used. Bristol wrench is provided with replacement hoist cable in the BL6423 supplemental kit (instructions, wrench and new set screw).

b. Using spline wrench (T5) loosen set screw in lock flange (3, figure 14-7) of storage drum (2) and remove hoist cable (1).

c. Remove rubber pressure roller (7) from below primary pulley (13). Remove screws (11), lockwashers (10) and cover (12), then thread one screw into end of the tension roll shaft (9). Using the screw as a puller, and maintaining hand pressure on the roller to keep it centered, withdraw the shaft to free the roller.

d. Remove remainder of hoist cable (1) from hoist drive unit by manually unwrapping from storage (2) and primary and secondary pulleys (13 and 14).

e. Secure loose end of hoist cable (1). If cable is to be removed from rescue hoist refer to paragraph 14-28.

f. Disconnect hoist drive power cable (34, figure 14-1) from hoist drive unit (33). Install protective covers over plug and receptacle.

g. Remove hoist drive unit (33) from post (15) by removing two screws, washers and nuts at upper bracket (20), then two bolts, washers, nuts, and shims at lower bracket (22).

WARNING

Cleaning materials are flammable and toxic. Avoid skin contact and breathing of solvent vapors.

14-99. Cleaning — Hoist Drive Unit. Clean hoist drive unit with cloth and brush dampened with (C261). Dry with filtered compressed air. Do not allow solvent to enter drive motor, clutch or electrical components.

14-100. Inspection — Hoist Drive Unit. a. Inspect hoist drive unit (33, figure 14-1) for corrosion, dents, scratches, cracks, loose and missing hardware, and security of parts.

b. Inspect hoist cable (3) for condition (paragraph 14-30.)

c. Inspect storage drum (2, figure 14-7) for runout. Runout not to exceed **0.015** inch during reel-in and **0.050** inch during reel-out. (Refer to paragraph 14-106.)

d. Inspect storage drum (2, figure 14-7), level wind guide rollers (6), rubber pressure roller (7), idler pulley (8), and primary and secondary pulleys (13 and 14) for damage and excessive wear from hoist cable (1). Shallow cable marks in pulleys and rollers (except rubber pressure roller), are not cause for replacement.

e. Inspect electrical wiring on hoist drive unit (30, figure 14-1) for chafing, wear, and abrasion.

f. Inspect level wind shaft (5, figure 14-7) for nicks, scratches, burrs, and lack of lubricant. Inspect arm of level wind guide and rollers (6) to ensure it is not distorted or damaged.

g. Inspect guards (2, 5, 7, and 8, figure 14-8) to ensure they provide one-sixteenth inch clearance between guards and hoist cable (12) and that guards are 90 degrees to the cable on the primary and secondary pulleys (13 and 14, figure 14-8).

14-101. Repair or Replacement — Hoist Drive Unit (AVIM). a. Polish out minor nicks, scratches and corrosion not greater than **0.0015** inch in depth on hoist drive unit (30, figure 14-1) with No. 400 grit abrasive cloth or paper (C1). Touchup repaired areas using chemical film (C62) and primer coating (C206).

b. Replace hoist cable (3), no repairs permitted (paragraph 14-28.)

c. Send hoist drive unit (30, figure 14-1) to Depot Maintenance when cracks are evident, storage drum runout exceed limits, excessive wear on primary and secondary pulleys, arm of level wind guide and rollers is distorted, or level wind shaft is damaged.

14-102. Installation — Hoist Drive Unit. a. Position hoist drive unit (30, figure 14-1) to lower bracket (22) on post (15). Mounting flange of drive unit to be on outboard side of bracket on one side and inboard on the opposite side. Loosely install two bolts (boltheads inboard) with thin aluminum washers and nuts.

b. Position hoist drive unit (30) to upper bracket (20) and loosely install two screws (screw heads inboard) with thin aluminum washers and nuts.

c. Shim between clevis of lower bracket (22) and hoist drive unit (30) to eliminate preload in excess of **0.005** inch, as required. Tighten mounting bolts and screws to standard torque.

d. Remove dust covers from plug and receptacle of hoist drive power cable (31) and control box (19). Connect cable to control box and safety with lockwire (C155).

NOTE

If hoist cable was removed from the rescue hoist reinstall cable in accordance with paragraph 14-32.

If hoist cable was retained in rescue hoist, complete cable installation in accordance with paragraph 14-32 step c warning statements and subsequent steps.

e. Perform operational check (paragraph 14-4.)

14-103. HOIST CABLE STORAGE DRUM.

14-104. Description — Hoist Cable Storage Drum. The hoist cable storage drum (2, figure 14-7) secures the end of hoist cable (1) and incorporates the down limit switch.

14-105. Removal — Hoist Cable Storage Drum. Send hoist drive unit (30, figure 14-1) to Depot Maintenance.

14-106. inspection — Hoist Cable Storage Drum. a. Inspect hoist cable storage drum (2, figure 14-6) for corrosion, binding, nicks, cracks, loose or missing hardware, and security of parts.

b. Inspect clutch of the hoist drive unit for proper setting as shown in figure 14-10. If the storage drum does not rotate with **35** inch-pounds applied to the torque wrench, the clutch is good. Fabricate test adapter in accordance with figure 14-10.

c. Inspect storage drum for runout as shown in figure 14-11. Mount dial indicator to hoist drive unit with pointer in contact with surfaces indicated. Runout not to exceed **0.015** inch during reel-in and **0.050** inch during reel-out with hoist operating electrically.

14-107. Repair or Replacement — Hoist Cable Storage Drum. a. Polish out minor nicks, scratches and corrosion not greater than **0.0015** inch on stowage drum (2, figure 14-6) using No. 400 grit abrasive cloth or paper (C1). Touch up repaired areas with chemical film (C62) and primer coating (C206).

b. Replace loose or missing hardware.

c. Send hoist drive unit (30, figure 14-1) to Depot Maintenance when inspection limits are exceeded.

14-108. Installation — Hoist Cable Storage Drum. Install hoist drive unit (30, figure 14-1) in accordance with paragraph 14-105.

14-109. CONTROL PENDANT.

14-110. Description — Control Pendant. The control pendant (32, figure 14-1) is a hand-held, remote-control device that incorporates a double-throw, center-off, toggle switch for boom-in and boom-out operation, a control switch that governs the hoist direction and speed, and a control button for the intercommunication system. The pendant assembly housing is nonconductive and impact resistant. When properly assembled, the pendant housing is dust and moisture resistant.

14-111. Removal — Control Pendant. a. Disconnect plug for control pendant (32, figure 14-1) at mating receptacle on control box (19).

b. Remove control pendant (32) and protect plug and receptacle with dust covers.

14-112. Inspection — Control Pendant. a. Inspect control pendant (32, figure 14-1) for condition and wiring for security of plug.

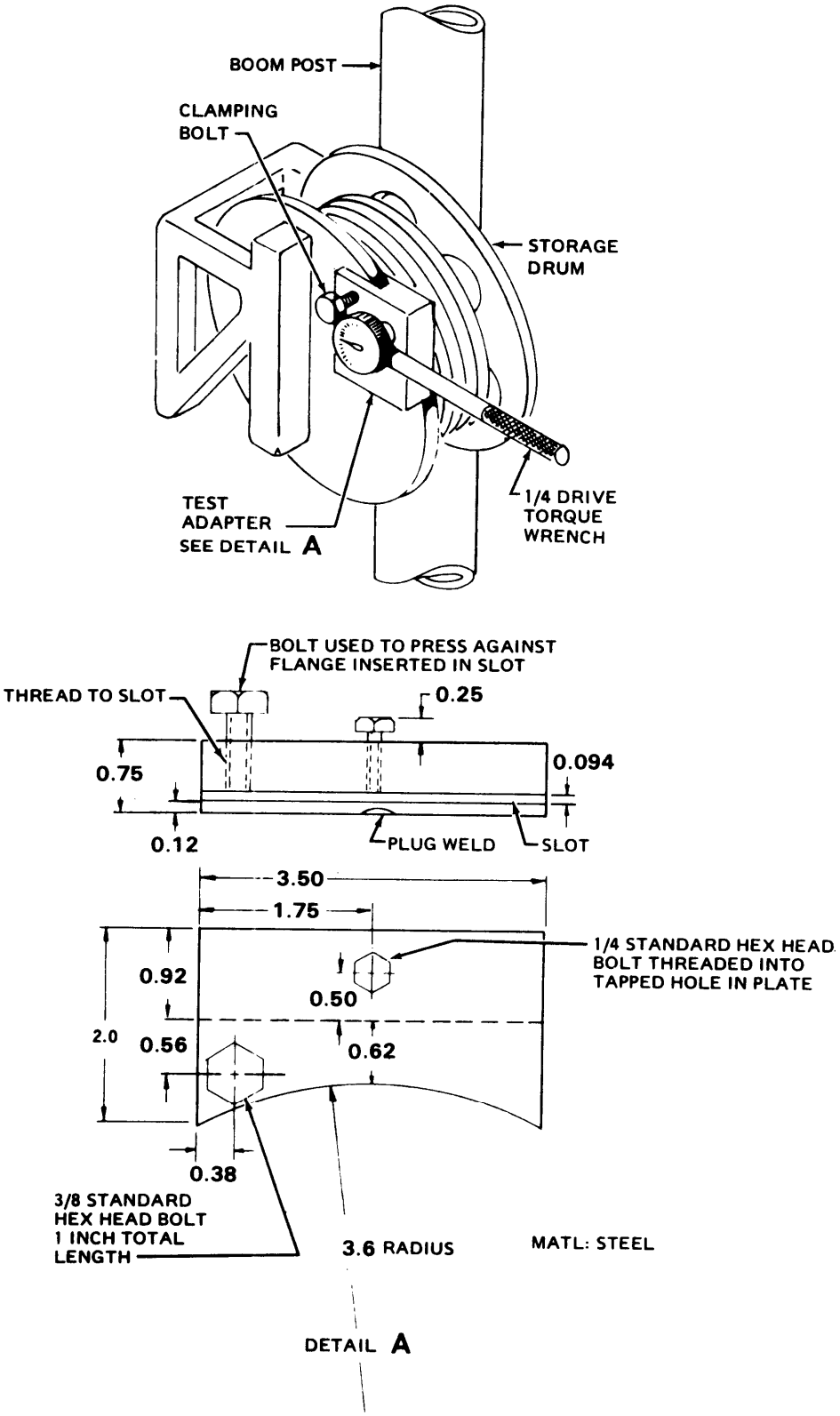

Figure 14-10. Installation - Storage Drum Clutch Tester

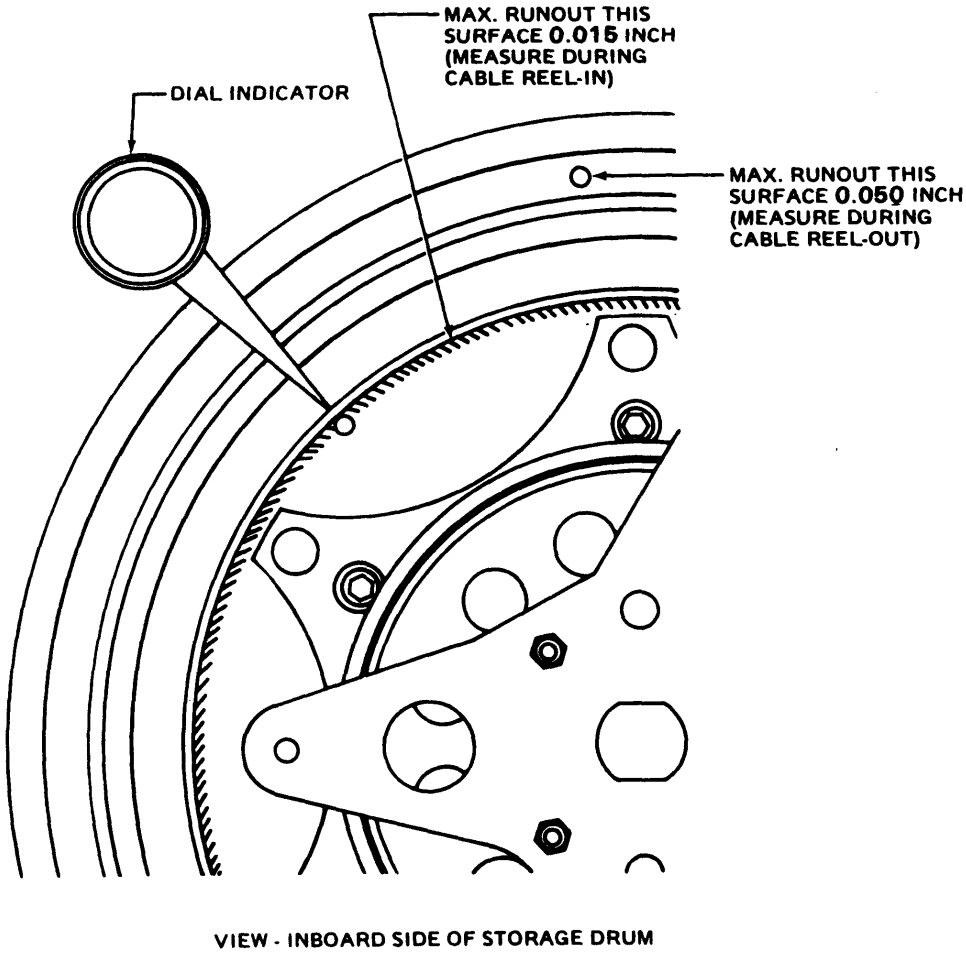

Figure 14-11. Measuring Storage Drum Runout

b. Inspect switches for security and rubber boot for condition tears and flexibility.

NOTE

If pendant switch will not return to center and motor continues to run; rubber boot is not secure.

14-113. Repair or Replacement — Control Pendant. a. Repair rubber boot on control pendant (32, figure 14-1) as follows:

(1) Remove retaining ring that secures boot and remove boot.

(2) Secure boot to pendant control with adhesive (C24), insuring that boot is centered.

(3) Replace retaining ring.

b. If control pendant (32) shows evidence of damage send to Depot Maintenance.

14-114. Installation — Control Pendant. a. Remove dust covers from plug of control pendant (32, figure 14-1) and receptacle on control box (19).

b. Connect control pendant (32) to control box (19) and tighten plug.

14-115. HOOK AND BUMPER ASSEMBLY.

14-116. Description — Hook and Bumper Assembly. The hook and bumper assembly (37, figure 14-1) is attached to the hoist cable (3) to

provide a positive means of rapidly connecting a sling to the hoist. The swivel hook, handwheel and bumper assembly are composed of two major subassemblies: swivel hook and handwheel and the bumper assembly. The hook is machined from a forging and incorporates a spring actuated safety hook to prevent accidental release of a load from the hook. The handwheel is machined from a corrosion resistant steel casting. The bumper assembly consists of a molded rubber bumper and a corrosion resistant steel shield and washer assembly. The bumper assembly encloses a tapered compression spring which adds body and resiliency to the rubber bumper. The hook assembly is attached to the hoist cable by means of a split insert that encloses the shank end of the hook and the ball terminal of the hoist cable. The insert is pinned to the handwheel.

14-117. Removal — Hook and Bumper Assembly.

NOTE

It maybe necessary to reel out hoist cable 12 to 24 inches to aid in hook and bumper removal.

a. Pull cotter pin and remove retaining pin (5, figure 14-12) from center of handwheel (12).

b. Hold hook (8) stationary and firmly work (pull) handwheel (12) from collar (9) and hook. Separate collar and remove hook and ball terminal (10) of hoist cable (1).

c. Withdraw hoist cable (1) from shield (2). Compress bumper (3) and retaining ring (4) and remove handwheel (12). Separate bumper, ring and spring (11).

d. Remove safety hook and spring (7) from hook (8) by removing screw, washers and nut (6).

WARNING

Cleaning materials are flammable and toxic. Avoid skin contact and breathing of solvent vapors.

14-118. Cleaning — Hook and Bumper Assembly. Clean hook and bumper assembly with cloths dampened with solvent (C261).

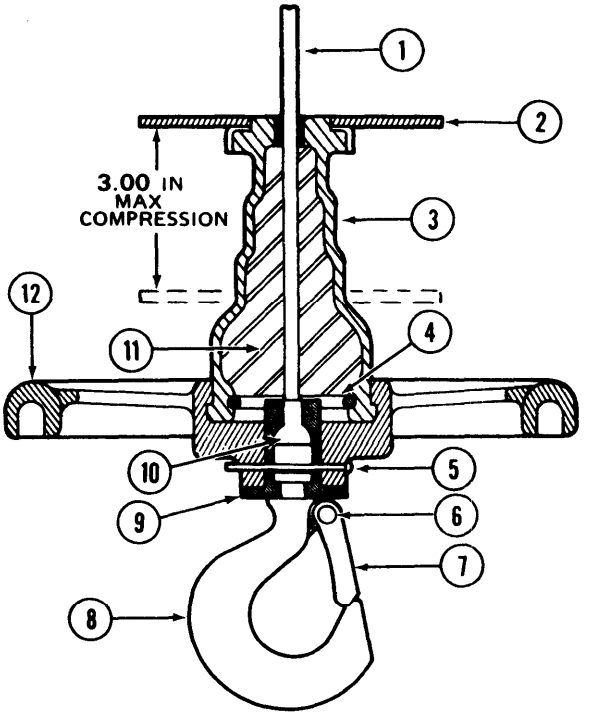

1. Hoist cable
2. Shield
3. Bumper
4. Retaining ring
5. Retaining pin
6. Screw washers and nut
7. Safety hook and spring
8. Hook
9. Collar
10. Ball terminal
11. Spring
12. Handwheel

Figure 14-12. Hook and Bumper Assembly

14-119. Inspection — Hook and Bumper Assembly. a. Inspect hook (8, figure 14-12) for visible damage and freedom of movement in handwheel (12).

b. Compress bumper (3) and inspect hoist cable (1) for cleanliness and damage (paragraph 14-30).

c. Check operation and security of safety hook and spring (7).

d. Check bumper (3) and shield (2) for wear and tears or other damage that may limit function. Check for a maximum compression of **3.00** inches.

e. Check security of retaining pin (5).

14-120. Inspection — Hook and Bumper Assembly (Removed) (AVIM). a. Complete inspection requirements of paragraph 14-119.

b. Inspect the following parts by fluorescent penetrant code (F) or magnetic particle code (M) as applicable:

Index No.	Nomenclature	Code
8	Hook	M
9	Collar	M
12	Handwheel	F

(1) Fluorescent penetrant inspect handwheel (12) in accordance with MIL-I-6866 and TM55-1500-204-25/1.

(2) Magnetic particle inspect hook (8) and collar (9) in accordance with MIL-I-6868 and TM55-1500-204-25/1 as follows:

(a) Inspect hook using 1200 amps by circular and directional method. Defects — None.

(b) Inspect collar using 1000 amps by longitudinal method. Defects — None.

c. Inspect hook and bumper assembly in accordance with figure 14-13. Parts exceeding wear limits shall be replaced.

d. Inspect hoist cable at ball terminal (6) for broken strands or other damage. (Paragraph 14-30).

14-121. Repair — Hook and Bumper Assembly. Replace hook and bumper assembly and attaching parts if damaged.

14-122. Installation — Hook and Bumper Assembly. a. Assemble safety hook and spring (7, figure 14-12) together so that long end of spring will be under tongue of hook.

b. Position safety hook and spring (7) to hook (8) and install screw, two washers and nut (6). Tighten screw, then depress safety hook several times to ensure freedom of movement.

c. Apply several drops of lubricating oil (C169) to contacting surfaces at hook and at pivot point on screw.

d. If shield (2) is separated from bumper (3), coat the inside surfaces of shield and outside surfaces of bumper flange with adhesive (C34). Force bumper flange into shield, assembly may be handled immediately after cementing; however, allow to air cure 24 hours before hoist operations.

e. Install retaining ring (4) into inner groove of bumper (3). Fit spring (11) into bumper.

f. Fit wide end of bumper (3) into recess in handwheel (12) until bead on bumper seats in groove.

g. Apply a liberal coating of grease (C126) to load bearing surfaces of collar (9).

h. Insert hoist cable (1) down through shield (2), bumper (3) and handwheel (12).

i. Fit collar (9) over ball terminal (10) and hook (8). Press collar into recess in handwheel (12) until seated and holes for retaining pin (5) are aligned.

j. Insert retaining pin (5) through handwheel (12) and collar (9). Secure pin with washer and cotter pin.

14-123. LIMIT SWITCHES.

14-124. Description — Limit Switches. Two limit switches are installed in the hoist assembly. The up limit switch (35, figure 14-1) is located on the lower side of the boom (7) and stops the hoist when the switch is closed by the hook and bumper assembly (37) contacting the trigger assembly (36). The down limit switch is located in the hoist storage drum and stops the hoist when the cable is fully reeled-out.

14-125. Removal — Limit Switches. a. Remove up limit switch (35, figure 14-1) as follows:

(1) Operate hoist and extend hook and bumper assembly (37) 12 to 24 inches. Disconnect electrical power to rescue hoist.

(2) Remove boom covers (2) by removing attaching screws and washers

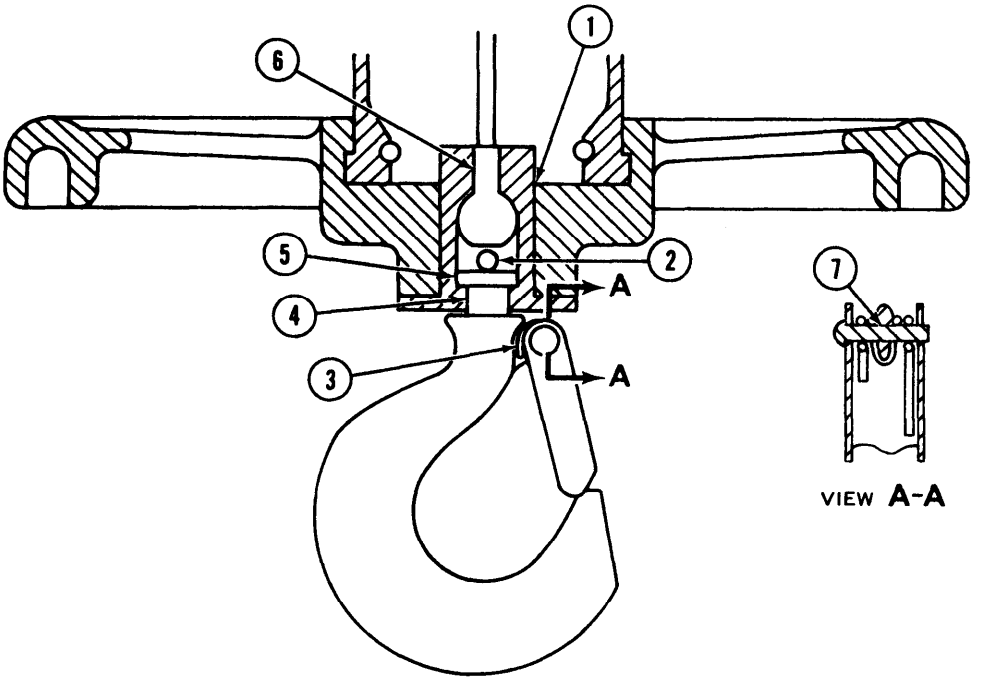

ITEM NO.	NOMENCLATURE	NEW PART DIMENSIONS MIN.	MAX.	WEAR LIMITS
1	Collar to Handwheel Fit	0.000	0.004L	0.010
2	Retaining Pin Bore — ID	0.160	0.163	0.172
3	Safety Hook Bore — ID	0.152	0.156	0.176
4	Collar to Hook Fit	0.000	0.010L	0.020
5	Hook Collar Retaining Land — THK	0.167	0.177	0.150
6	Ball Terminal Shank to Collar Fit	0.008	0.023	0.036
7	Safety Hook Screw Bore — ID	0.142	0.147	0.156

Figure 14-13. Hook and Bumper Assembly - Wear Limits

(3) Remove guillotine assembly (4) as an assembly and relocate to slow access to up limit switch (35) (paragraph 14-35).

(4) Disconnect two electrical wires attached to up limit switch (35, figure 14-1).

(5) Loosen check nuts securing up limit switch (35) to boom (7). Lift switch from boom.

b. Down limit switch is located inside the storage drum (4, figure 14-7) of the hoist drive unit (30, figure 14-1). Send hoist drive unit to Depot Maintenance for replacement of switch.

14-126. Inspection — Limit Switches. a. Inspect up limit switch (35, figure 14-1) for cracks, corrosion, security and missing hardware.

b. Check up limit switch (38) for proper adjustment (paragraph 14-129.)

c. Check free operation of down limit switch actuator pin (figure 14-7). Do not depress actuator pin below surface of storage drum (4).

d. Check down limit switch for proper adjustment (paragraph 14-129).

14-127. Repair or Replacement — Limit Switches (AVIM). a. Replace up limit switch (35, figure 14-1) when cracked, damaged or not operable. No repair permitted.

b. Replace down limit switch when not operable. In the event the actuator pin remains below the surface of the storage drum (4, figure 14-7) send hoist drive unit (30, figure 14-1) to Depot Maintenance.

14-128: Installation — Limit Switches. a. Install up limit switch (35, figure 14-1) as follows:

(1) Connect the two electrical wires in boom (7) to up limit switch (35).

(2) Insert up limit switch (35) into opening in boom (7) and adjust and tighten furnished nuts securely to secure switch. Adjust switch in accordance with paragraph 14-129.

b. For installation or replacement of down limit switch send hoist driven unit (30, figure 14-1) to Depot Maintenance.

14-129. Adjustment — Limit Switches. a. Adjust up limit switch (35, figure 14-1) as follows:

(1) Operate hoist and extend hook and bumper assembly (37) to just above ground level, or approximately 6 feet.

(2) Check trigger (36) to ensure that no binding or deformation exists. With the trigger in its normal (down) position, adjust bolt (38) until **0.010** inch clearance exist between bolt head and actuator on up limit switch as shown in view c. Tighten nut (39) until lockwasher is fully compressed maintaining bolt position. Verify required clearance exists.

(3) Operate hoist and slowly retract hook and bumper assembly (37), actuate trigger (36) three or four times to ensure that up limit switch stops hoist. Extend and retract hook and bumper assembly several times checking to ensure that when the bumper contacts the trigger the hoist stops before stressing hoist cable (3).

b. Adjustments to down limit switch are as follows:

(1) For internal adjustment send hoist drive unit (30) to Depot Maintenance.

(2) Operate hoist until hoist cable (1, figure 14-7) is fully reeled out and three wraps remain on storage drum (2). Check third groove of storage drum for actuator pin (4). If pin is missing or cannot be depressed by 5 pounds cable tension, the switch must be replaced before hoist operations can be resumed. Send hoist drive unit to Depot Maintenance.

14-130. OVERLOAD SENSING RELAY.

14-131. Description — Overload Sensing Relay. The overload sensing control is mounted near the hoist power relay in the aft radio compartment and serves to sense hoist overload current surges, and opens circuit to hoist power relay holding coil, thus removing electrical power from hoist motor. Sensing control will reset automatically but hoist PWR circuit breaker will remain open. (Refer to paragraph F-11 in Appendix F for wiring diagrams.)

14-132. Removal — Overload Sensing Control. a. Disconnect battery and external power.

b. Remove electrical wires from overload sensing control terminal.

c. Tape ends of disconnected wires.

d. Remove mounting screws and washers from overload sensing relay.

e. Remove relay.

14-133. Installation — Overload Sensing Control. a. Remove protective tape from overload sensing control wire terminals.

b. Electrically ground sensing control mounting hole and contact surface.

c. Position sensing control on mounting bracket, install mounting screws and washers.

d. Place wire terminals on sensing control terminal post and secure with existing washers and nuts.

e. Connect battery.

14-134. TRIGGER ASSEMBLY.

14-135. Description — Trigger Assembly. The trigger assembly (23, figure 14-14) is mechanically actuated by the hook and bumper assembly (21) closing the up limit switch and halting the hoist in the full-up position.

14-136. Removal — Trigger Assembly. a. Operate the hoist assembly and extend the hook and bumper assembly (21, figure 14-14) 12 to 24 inches. Disconnect electrical power to rescue hoist.

b. Remove hook and bumper assembly (21) from hoist cable (1) (paragraph 14-117.)

c. Remove nut (25, figure 14-14), washer (24) and bolt (22) from trigger (23), then remove from boom (13).

14-137. Inspection — Trigger Assembly. a. Inspect trigger (23, figure 14-14) for damage, distortion, corrosion and cracks.

b. Inspect trigger (23) for worn bushings, damaged nut and loss of rubber bumper.

14-138. Repair or Replacement — Trigger Assembly. a. Replace trigger (23, figure 14-14) when damaged to the extent it is no longer functional, distorted, cracked, or bushings are elongated.

b. When rubber bumper is missing or loose, bond new bumper in place using adhesive (C22).

14-139. installation — Trigger Assembly. a. Loosely install bolt (26, figure 14-14), Iockwasher (19) and nut (20) in trigger (23).

b. Position trigger (23) to boom (13) and install bolt (22), washer (24) and nut (25). Tighten nut sufficiently to provide security for trigger, but allow freedom of movement, secure with cotter pin.

c. Adjust bolt (26) and up limit switch (paragraph 14-129.)

d. Reinstall hook and bumper assembly (21, figure 14-14) (paragraph 14-122.)

14-140. SIDE PLATES AND ROLLERS.

14-141. Description — Side Plates and Rollers. The side plates (7, figure 14-14) and roller (4, 12 and 17) are located on the outboard end of the boom (13) and limit oscillation of hook and bumper assembly (21).

14-142. Removal — Side Plates and Rollers. a. Operate the hoist assembly and extend the hook and bumper assembly (21, figure 14-14) 12 to 24 inches. Disconnect electrical power to rescue hoist.

b. Remove hook and bumper assembly (21) from hoist cable (1) (paragraph 14-117.)

c. Remove lower pair of rollers (12, figure 14-14) by removing bolts (10), washers (11), and nuts (14) from side plates (7).

d. Remove middle pair of rollers (17) by removing bolts (5), washers (6), spacers (18), and felt washers (16) from boom (13).

e. Remove upper pair of rollers (4) by removing bolts (9), washers (8), felt washers (2), spacers (3), and nuts (15) from side plates (7) and boom (13). Remove side plates from boom.

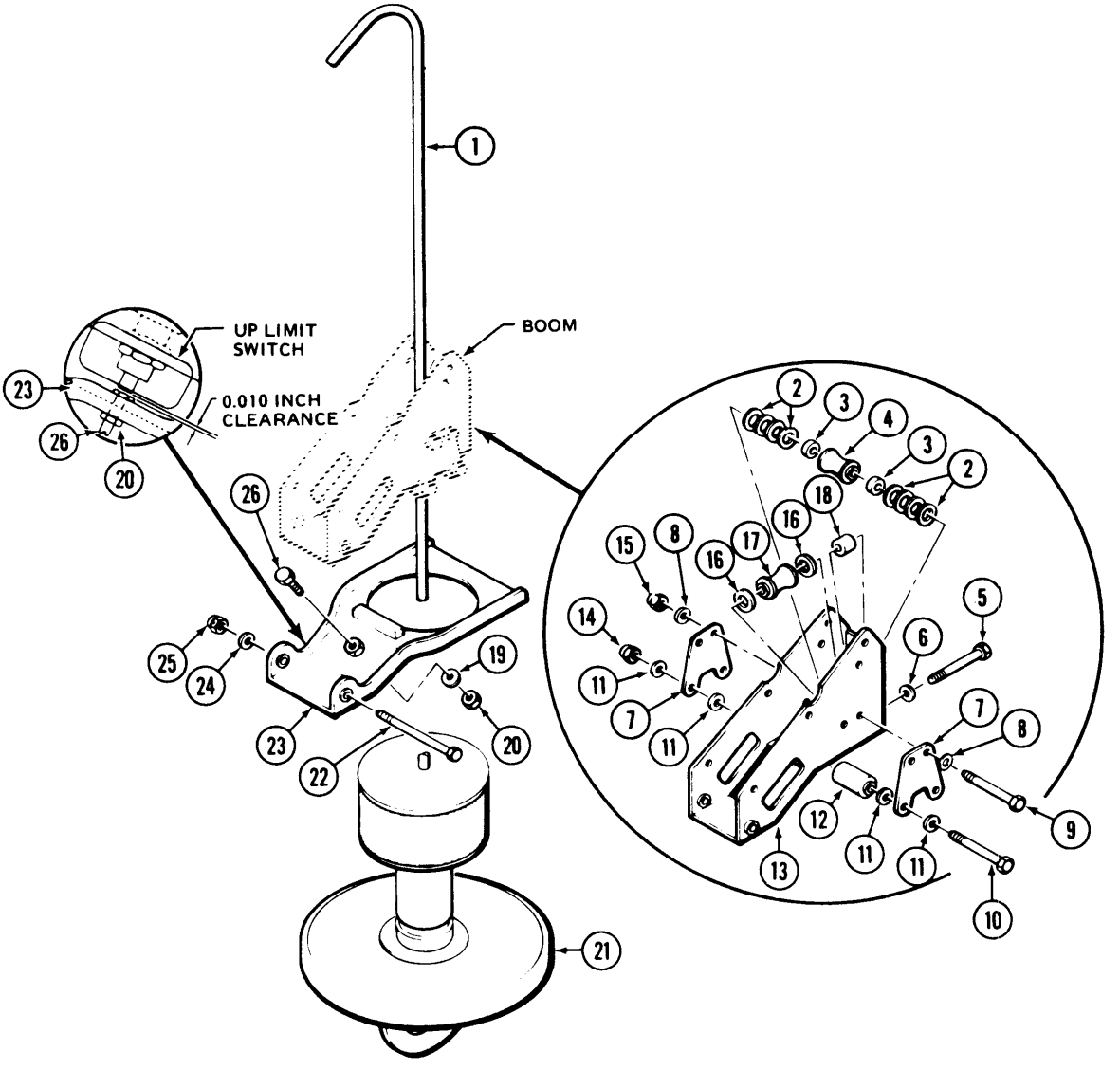

1. Hoist cable
2. Felt washers
3. Spacer
4. Roller
5. Bolt
6. Washer
7. Side plate
8. Washer
9. Bolt
10. Bolt
11. Washer
12. Roller
13. Boom
14. Nut
15. Nut
16. Felt washer
17. Roller
18. Spacer
19. Lockwasher
20. Nut
21. Hook and bumper assembly
22. Bolt
23. Trigger
24. Washer
25. Nut
26. Bolt

Figure 14-14. Trigger, Side Plates and Rollers

14-143. Inspection — Side Plates and Rollers. a. Inspect side plates (7, figure 14-14) and rollers (4, 12 and 17) for security, cracks, (corrosion, and missing hardware.

b. Inspect bushings in ends of rollers (4, 12 and 17) for cracks and elongation.

c. Inspect felt washers (2 and 16) for condition.

14-144. Repair or Replacement — Side Plates and Rollers (AVIM). a. Replace side plates (7, figure 14-14) and rollers (4, 12 and 17) when cracked, elongated holes, or excessive wear is evident. Shallow cable marks on rollers are not cause for replacement.

b. Replace felt washers (2 and 16) if torn, dirty or oil soaked.

WARNING

Cleaning materials are flammable and toxic. Avoid skin contact and breathing of solvent vapors.

14-145. Installation — Side Plates and Rollers. a. Clean oilite bushings in rollers (4, 12 and 17, figure 14-14) with a cloth dampened with solvent (C261). Do not lubricate oilite bushings.

b. Install middle pair of rollers (17) in boom (13). Place new felt washers (16) over bushings on each end of rollers and position in boom with spacers (18). Align bolt holes and install bolts (5) with thin steel washers (6). Tighten bolts to standard torque and safety bolt heads together with lockwire (C155).

c. Install upper pair of rollers (4) in boom (13). Place new felt washers (2) over bushings on each end of rollers and on spacers (3), four felt washers each side of rollers. Position rollers, spacers and felt washers in boom, align bolt holes and install side plates (7), steel washers (8), bolts (9), and nuts (15).

d. Install lower pair of rollers (12) between side plates (7). Place a steel washer (11) next to bushings on each end of rollers and position between side plates. Align bolt holes and install bolts (10), additional steel washers (11) and nuts (14).

e. Torque four nuts (14 and 15) **20 TO 25** inch-pounds. After assembly, all rollers (4, 12 and 17) must turn freely.

f. Route hoist cable (1) through rollers (4, 12, and 17) if not previously accomplished.

g. Install hook and bumper assembly (21) (paragraph 14-122).

14-146. HIGH PERFORMANCE RESCUE HOIST.

CAUTION

A locally manufactured placard shall be affixed to the hoist control box on an area visible from inside the aircraft when the hoist boom is extended. The placard will state: "Only certified personnel will operate the hoist during LIVE PICKUP."

14-147. Description - High Performance Rescue Hoist. The internal rescue hoist assembly consists of a vertical post extending from the floor structure to the cabin roof, a boom and an electrically operated winch. The hoist winch can be positioned at any one of four locations in the cabin (figure 14-21). Cable speed is limited by a mode switch on the hoist control panel to 250 feet-per-minute with a 300 pound load and to 125 feet-per-minute with the maximum load of 600 pounds. The cable is 258 feet long. The base plate and reaction arm allow installation of the hoist in the four alternate positions. A rotary actuator is provided for swinging the boom in and out of the cabin door. The hoist is operated by means of a control pendant or by controls on the right-hand cyclic stick. The pilot's hoist control switch provides for boom positioning and reeling up or down of the winch cable. The pilot's control has priority over the hoist operator's controls; however, the pilot has only a fixed full speed capability. The hoist operator's controls are located in the hoist control pendant and provide the following switches: a speed control knob that is self centering provides variable speed control for reeling the cable up or down; a boom in and out switch and an intercom trigger switch provide communication with the flight crew through the hoist operator's headset; a cable limit light and an over-temperature light. The boom assembly includes a traction sheave, dual up-limit switches and a cable guide. The installed boom head is designed to swivel 60 degrees about the boom cable axis and 30 degrees either side of center. In the event that the up-limit switch malfunctions the cable is protected from being overstressed by two cable deceleration switches (one operates when hook is 8 to 10 feet from full-up, the other operates when hook is 12 to 18 inches from full-up) and by the force absorbing capability built into the cable snubber and inertia dump of the winch assembly. A powered traction sheave assembly, mounted on the end of the hoist boom, aids in lowering the hoist cable and prevents snarling of cable while being reeled out. A cable cutting assembly employing a ballistic charge, provides a means of cutting the cable free of the helicopter in an emergency. The cutter is electrically actuated by switches, protected by guards, located on the hoist control panel and on the pilots pedestal. The switches are sealed with breakaway wire. Electrical power to the hoist and its controls is 28 Vdc. Circuit protection is provided by the HOIST CABLE CUT, HOIST CONT, and HOIST PWR circuit breakers located in the overhead console. The electrical connection for hoist power is located in the cabin roof above the sound proofing. The control panel contains an elapsed time indicator, a power on (blue) light and an aircraft position switch.

CAUTION

Rescue hoist is life support equipment and shall be kept clean and in good operating condition. Hook and carrier assembly must be checked for bent safety latches and latch pins, at regular intervals, refer to TM 55-1520-210-PMD.

CAUTION

CABLE CUT circuit breaker does not control crew operators CABLE CUT switch. Cable cut connector (30, figure 14-16) is not connected until hoist is installed in aircraft. Cable cut cartridge (5, figure 14-25) must have shorting connector P/N PC06A8-4S installed when connector (30, figure 14-16) is not installed.

N O T E

Refer to paragraph 14-157 for installation.

14-148. Inspection - High Performance Hoist (Installed). a. Inspect hoist assembly for cleanliness, corrosion, cracks or breaks, and security of parts.

b. Inspect cable, refer to paragraph 14-169.

c. inspect winch for proper oil level at sight glass. During operation check to see if cable is winding on drum properly (view cable thru opening in winch).

d. Inspect electrical components, connectors and switches for damage and security. Check lights, press-to-test, bright-dim and switches for proper operation.

e. Inspect boom head for proper oil level at sight glasses.

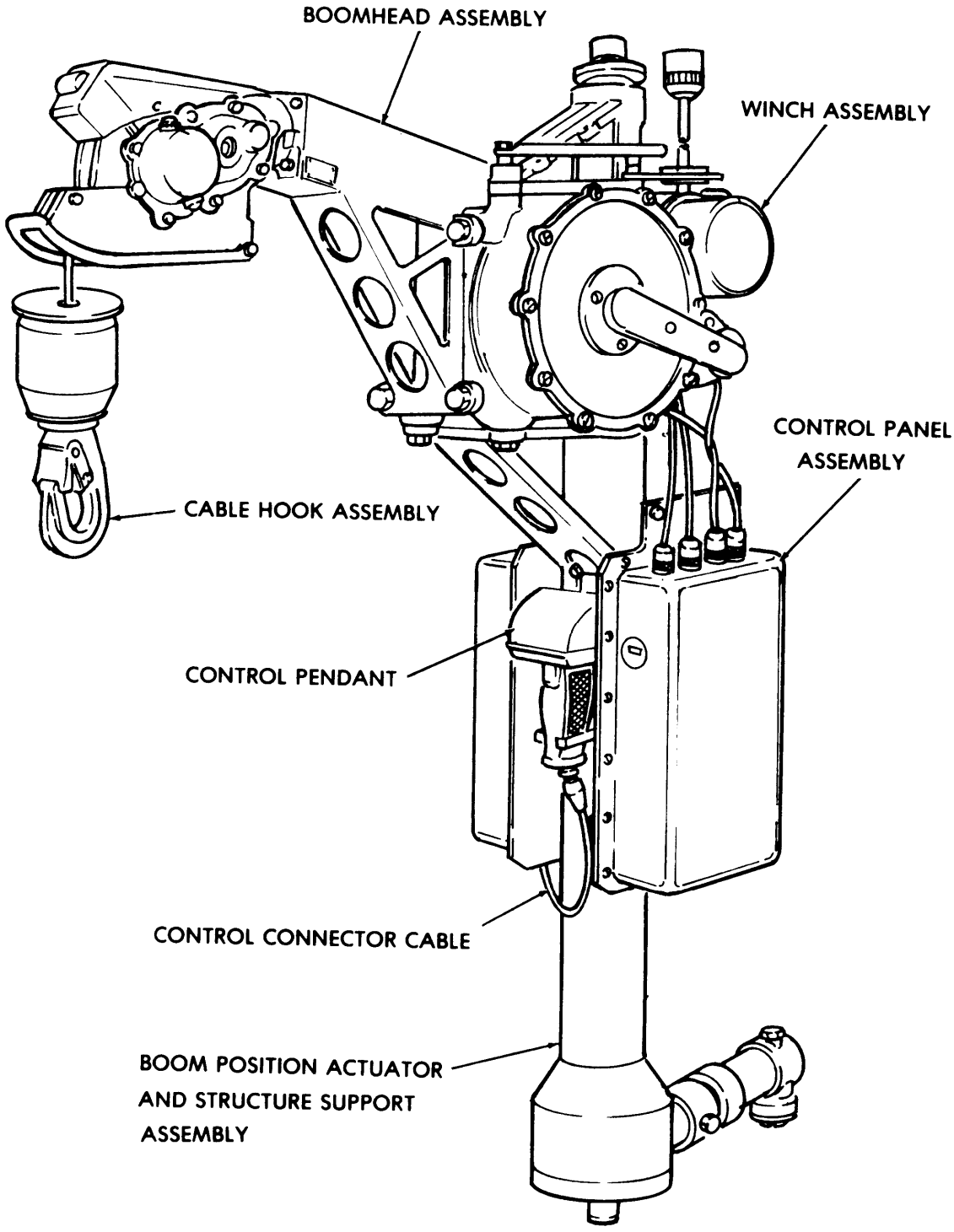

Figure 14-15. Rescue Hoist Assembly, General View.

14-149. Removal From Aircraft - High Performance Rescue Hoist.

CAUTION

Prior to removing the hoist from the aircraft, first power the hoist so as to rotate the boom approximately midway between the full in-board and full out-board positions.

CAUTION

Recommend two or more persons handle hoist during removal and installation.

a. Disconnect battery.

CAUTION

Install shorting connector to cable cutter connector.

b. Disconnect electrical connector from cable cutter and install shorting connector.

c. Open cabin ceiling soundproofing and disconnect input power cable.

d. Remove hoist power cable, close cabin ceiling soundproofing.

e. Disconnect quick disconnect adapters (43.1 and 45.1, figure 14-16) from retaining anchors located on aircraft floor.

f. Remove pin (30, figure 14-27) and rotate reaction arm (9) 180 degrees, install pin (30) and attach reaction arm (9) to stud (8).

g. Disconnect quick disconnect adapter (23, figure 14-27) and pull plunger (4) and rotate 90 degrees. Rotate vertical adjustment shaft to clear ceiling anchor.

NOTE

Hoist must be laid on winch drive side opposite of chain cover to prevent damage of the limit switch and drive assembly.

h. Remove hoist assembly from aircraft.

Paragraphs 14-150 through 14-152 have been deleted.

Page 14-46, including Figure 14-16, has been deleted.

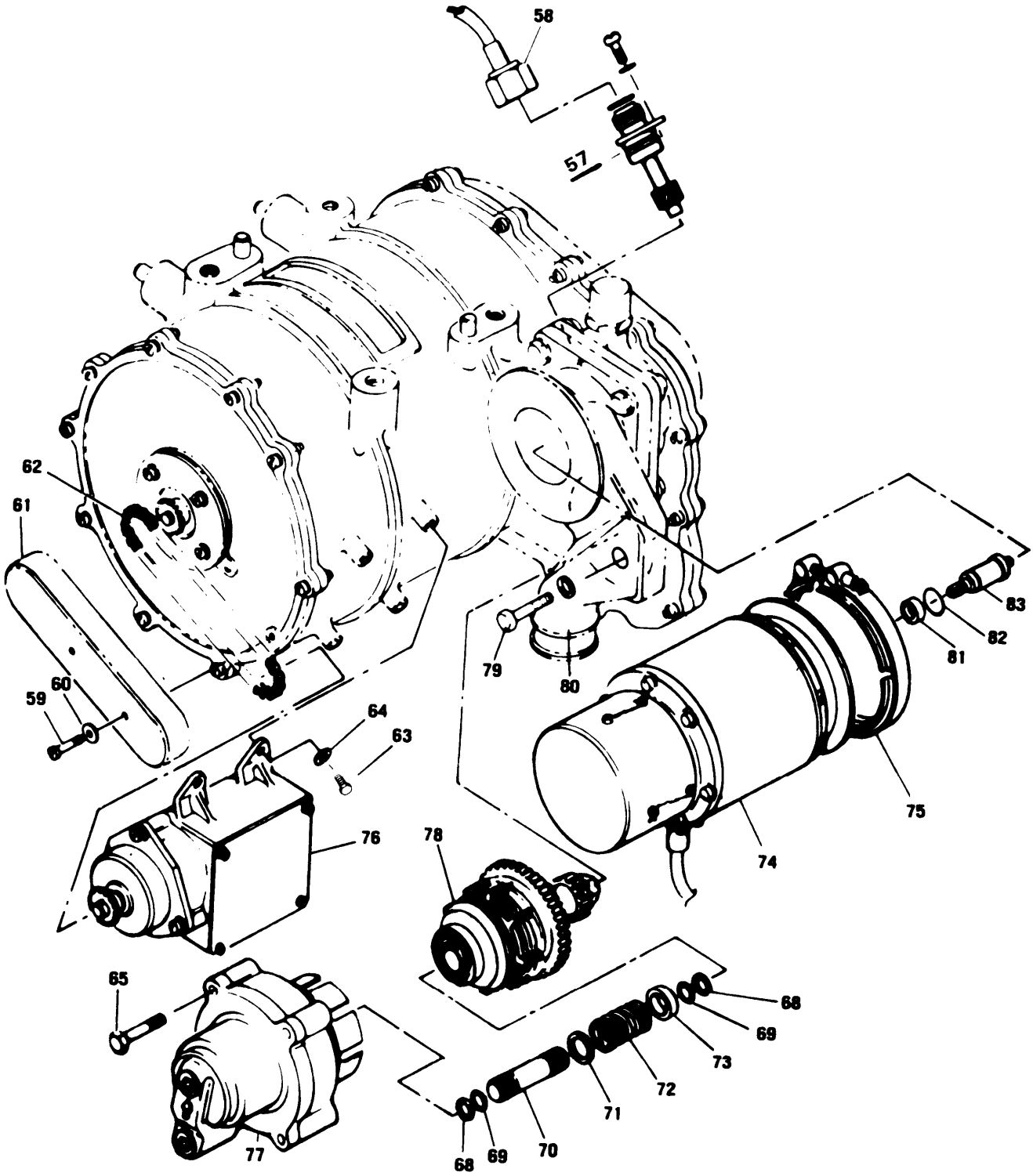

Figure 14-16 Hoist AssembLy, Parts Location (Sheet 2 of 3)

1. Control Connector Cable
2. Control Pendant Assembly
3. Clam
4, Hook
5. Control Panel Assembly
6. Screw
7. Clamp
8. Cable Hook Assembly
9. Deleted
10 Limit Switch Cable (J4)
11 Bolt
12 Washer
13 Nut
14. Clamp
15. Bolt
16. Washer
17. Nut
18. Clamp
19. Bolt
20. Washer
21. Upper Support Assembly
22. Bolt
23. Thermal Switch Connector
24. Washer-
24.1. Handle
25. Assembly Bracket
26. Spacer
27. Winch Assembly
28. Vertical Adjustment Detent
28.1 Quick Disconnect Adapter
29. Input Power Cable Connector
30. Cable Cutter Harness
31. Winch Motor Cable (J3)
32. Bolt
33. Washer
34. Boom Position Actuator and Structure Support
35. Boom Head Cable (J6)
36. Pendant Control Cable (J2)
37. Boom Motor Cable (J5)
38. Input Power Cable (J1)
39. Bolt
40. Washer
41. Bolt
42. Washer
43. Reaction Arm Assembly
43.1. Quick Disconnect Adapter
44. Release Pin Assembly
45. Release Pin Assembly
45.1. Quick Disconnect Adapter
46. Retainer Anchor Stud
47. Boom Head Assembly
48. Cable Cutter
49. Bolt
50. Deleted
51. Screw
52. Deleted
53. Deleted
54. Deleted
55. Deleted
56. Deleted
57. Preformed Packing
58. Flexible Drive Cable (Lockwire C155)
59. Screw
60. Washer
61. Chain Guard
62. Roller Chain
63. Screw
64. Washer
65. Bolt
66. Clamp
67. Air Duct Boot
68. Backing Ring
69. Preformed Packing
70. Shaft
71. Spacer
72. Spring
73. Spacer
74. Motor
75. V-Ring Clamp (Lockwire C155)
76. Drive Assy, Limit Switch
77. Housing Assy, Pump
78. Brake Assy, Automatic
79. Bolt
80. Air Duct Adapter
81. Seal
82. Packing
83. Interia Dump
84. Cable Assembly

Figure 14-16 Hoist Assembly, Parts Location (Sheet 3 of 3)

b. Inspect all pulleys and rollers for damage and freedom of movement.

c. Inspect winch (27, figure 14-16) for condition and security.

d. Inspect cable cutter (48) for condition and security.

e. Inspect rescue hoist power cables (38, 31, 35, 36, 37, and 10) for condition and security.

f. Inspect control panel (5) and control pendant (2) for the following:

(1) Check security of mounting to hoist stanchion.

(2) Check security of switches.

(3) Check security of cable connectors.

(4) Inspect cables for fraying and wear.

(5) Inspect air duct boot (67) for security and condition.

(6) Check indicator lights on pendant for operation (press to test and dim capability).

g. Check oil level in boom head and winch with hoist in normal operating position. See figure 14-17.

h. Inspect stanchion (34, figure 14-16) for damage. Check electrical cable connector at control panel for condition and security.

i. Inspect rescue hoist for correct installation and security of all components, hardware, cotter pins, lockwire.

14-153. Lubrication — High Performance Rescue Hoist. The lubrication instructions are contained on a lubrication plate located on the side of housing assembly. The lubrication plate requirements and oil servicing of the winch, and boom head is mounted on the winch case. (See figure 14-17.) Service with Dexron II automatic transmission fluid (C133).

14-154. Assembly - High Performance Rescue Hoist Refer to applicable component installation paragraph for assembly instructions.

14-155. Operational Check - High Performance Rescue Hoist. See figures 14-17 through 14-19.

WARNING

Prior to actual Live hoisting of personnel after a rescue hoist has had a new or used hoist cable installed and/or hook assembly maintenance, the hoist shall be installed on the UH-1H/V aircraft and one or more lifts with full cable length shall be made using a dummy load of 250 to 300 lbs.

a. Check oil level in hoist and boom head.

CAUTION

Insure pilots cable cut switch on the pedestal and hoist operator cable cut switch on the hoist control box are in the OFF postion.

b. Connect GPU to helicopter.

c. Position AIRCRAFT POSITION switch on control panel to the desired position.

d. Close RESCUE HOIST CONT and RESCUE HOIST POWER circuit breakers on Pilots overhead console. Blue POWER ON light should be ON, and fan should be operating.

e. Using pendant BOOM switch, rotate boom out and in, and then out to test boom operation.

NOTE

When hoist is installed on left side of aircraft, pilots boom switch operates in reverse.

f. Using Pilot's BOOM control switch, rotate boom in, and then out.

WARNING

Reel cable out from the boom head in line with the boom axis during the following test procedures. Care must be taken not to pull the cable taut around the cable guide/roller since kinking of the cable might result. Avoid damaging cable on rough surfaces including the ground. It is recommended that the cable from the hoist be fed onto an improvised drum of at least 9" diameter.

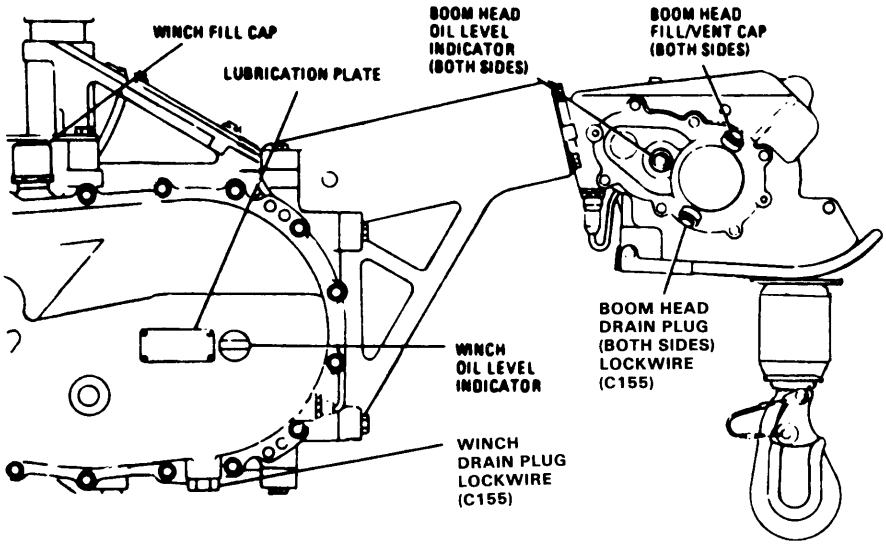

Figure 14-17. Oil Level Indicators and Drain Plugs

g. Position SPEED MODE SWITCH on control panel to HIGH.

h. Using pilots HOIST CONTROL switch lower cable hook until all the cable is out. Note caution light out when 10 feet of cable is unreeled and ensure cable speed decelerates to approximately 75 feet per minute when cable is within 10 feet of all out (250 feet).

i. Using pilots HOIST CONTROL switch, reel in cable and observe that cable speed slows when caution light comes ON.

CAUTION

GPU must be used or deceleration may not occur.

j. Push up on boom up-limit switch actuator arm during reeling in to check that hoist stops running when up-limit switches are actuated.

k. Using pilots HOIST CONTROL switch, continue to reel in and observe that cable speed decelerates as hook approaches the boom head. Deceleration should take place at 12 inches minimum from boom head when cable is reeled in with no load and 48 inches maximum when entire 250 foot length is reeled in with 600 pounds maximum load. Readjust limit switch cam number 4 if required to meet the minimum/maximum length dimensions (paragraph 14-242).

l. Repeat steps f thru i using the pendant hoist control. Check that cable speed can be regulated by pendant hoist control from 0 to 250 fpm when cable is reeled out beyond 10 foot caution limit (amber light) is out.

m. Place SPEED MODE switch to LOW SPEED and repeat steps g thru j (maximum speed is 125 fpm).

n. Reel cable all the way up and rotate boom in to stowed position.

o. Open RESCUE HOIST CONT and RESCUE HOIST POWER circuit breakers.

14-156. Troubleshooting - High Performance Rescue Hoist. Troubleshoot the high performance rescue hoist in accordance with Table 14-2.

NOTE

Before you use this table, be sure you have performed all normal operational checks.

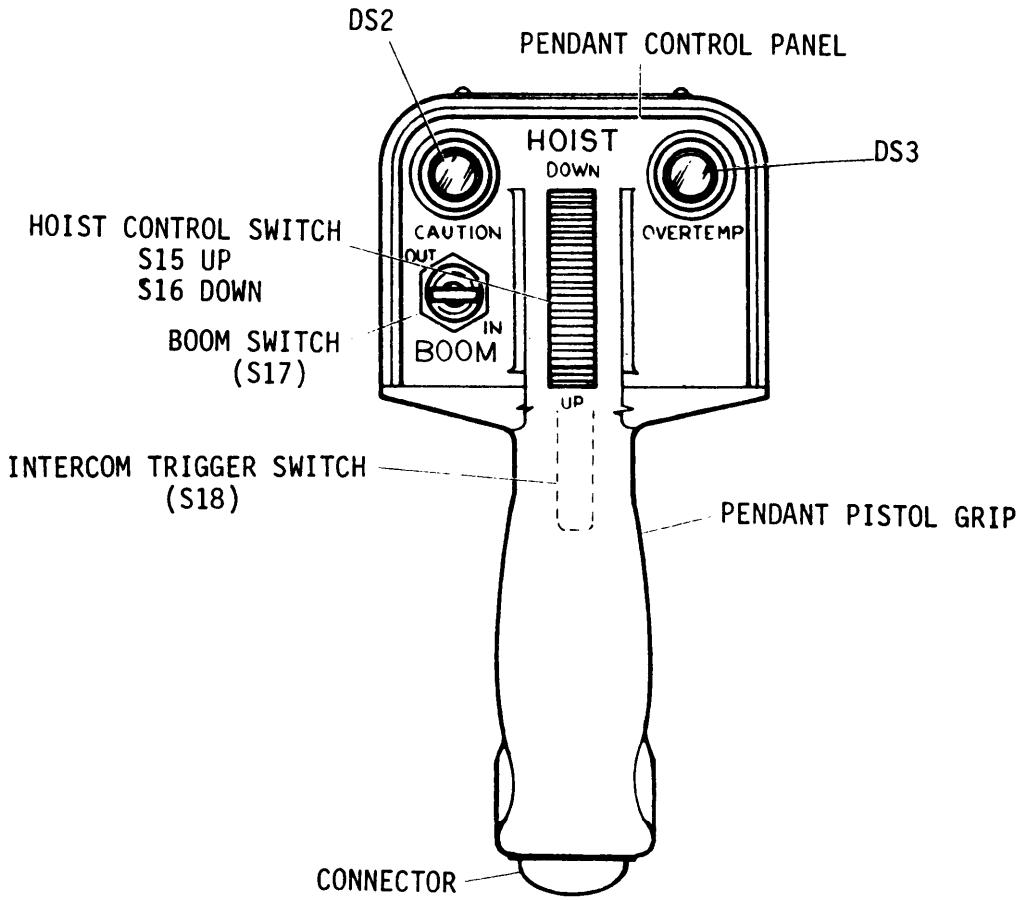

Figure 14-18. Control Pendant Assembly Controls and Indicators

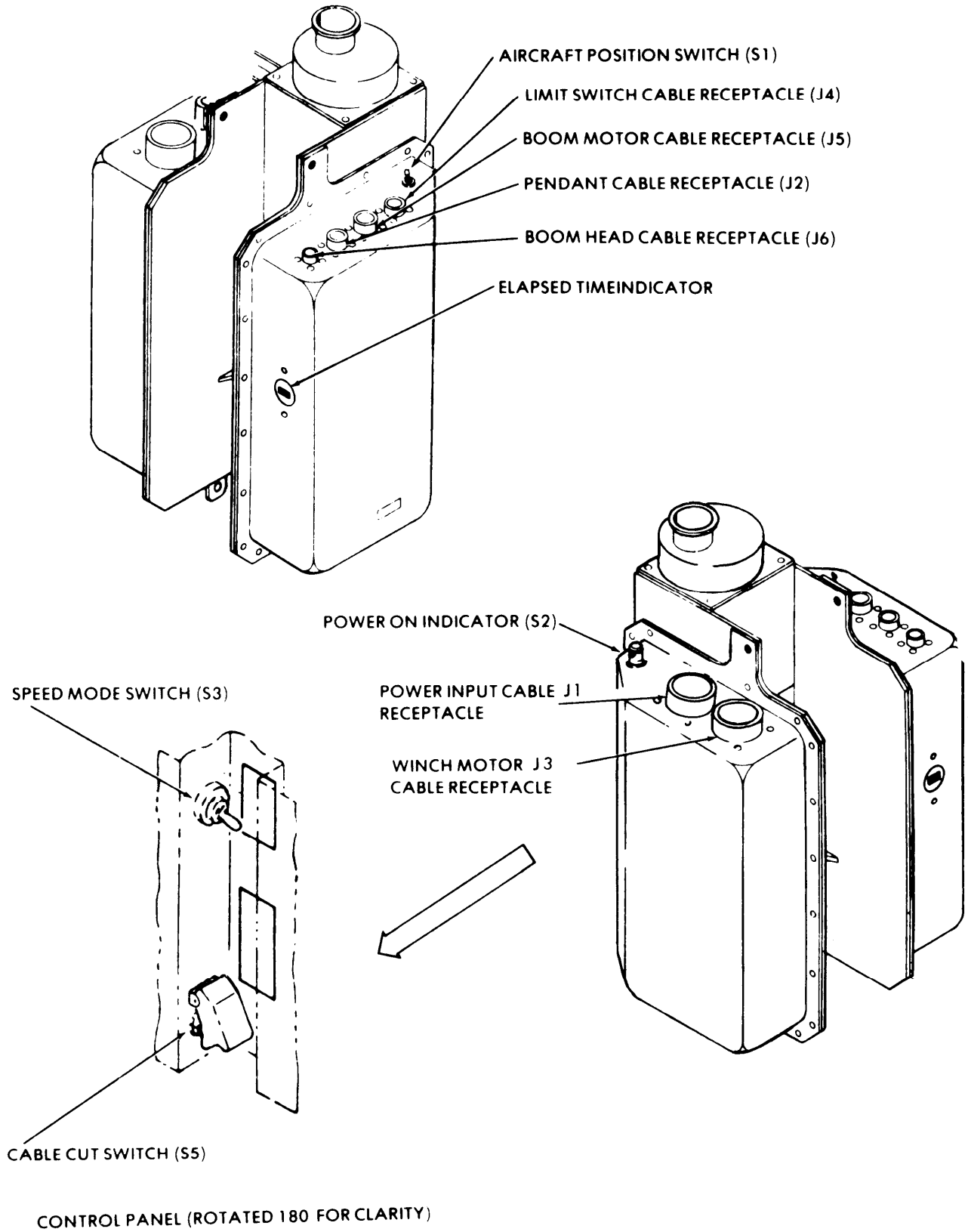

Figure 14-19. Control Panel Assembly, Controls and Indicators (Sheet 1 of 5)

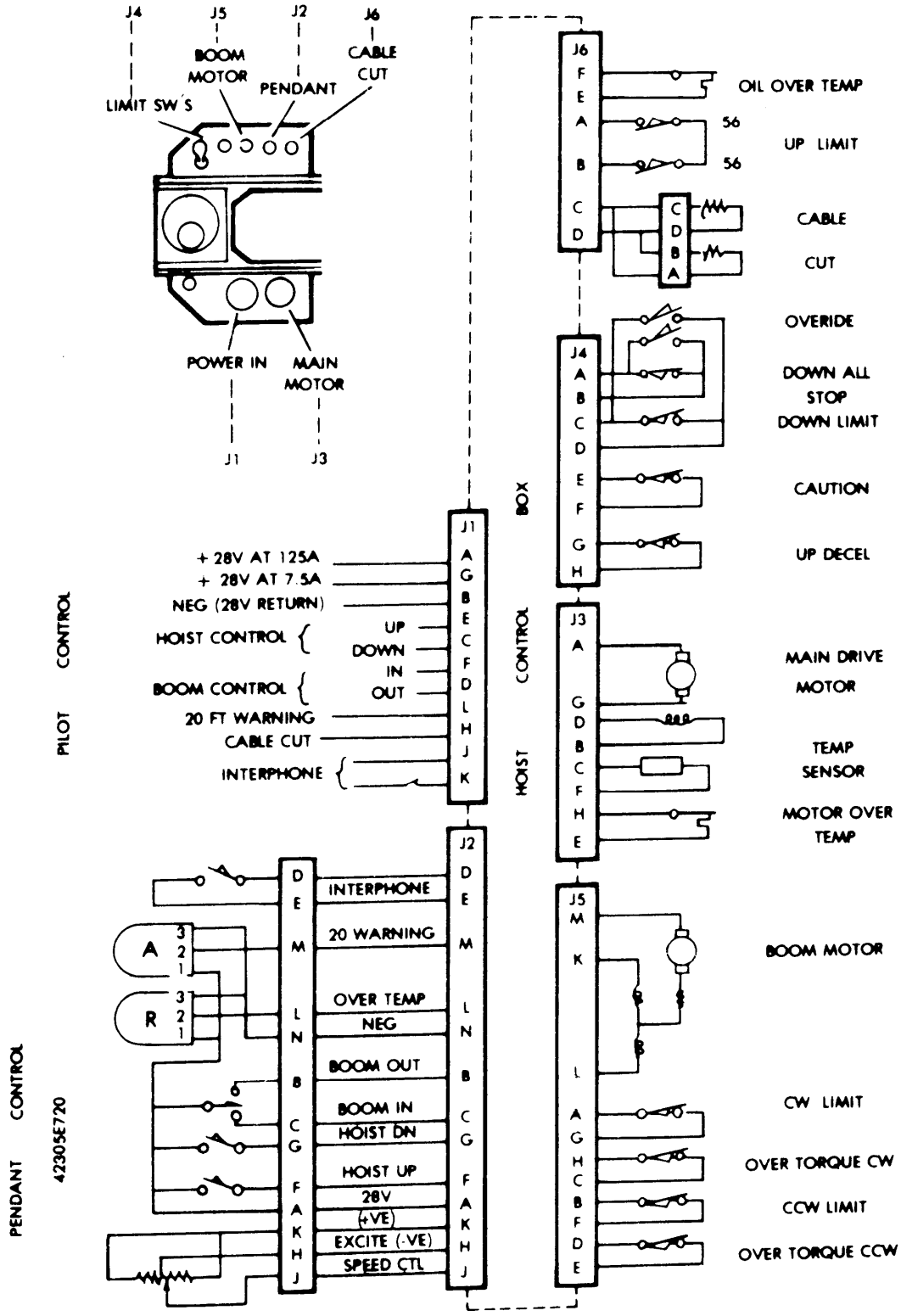

Figure 14-19. Control Panel Assembly, Controls and Indicators (Sheet 2 of 5)

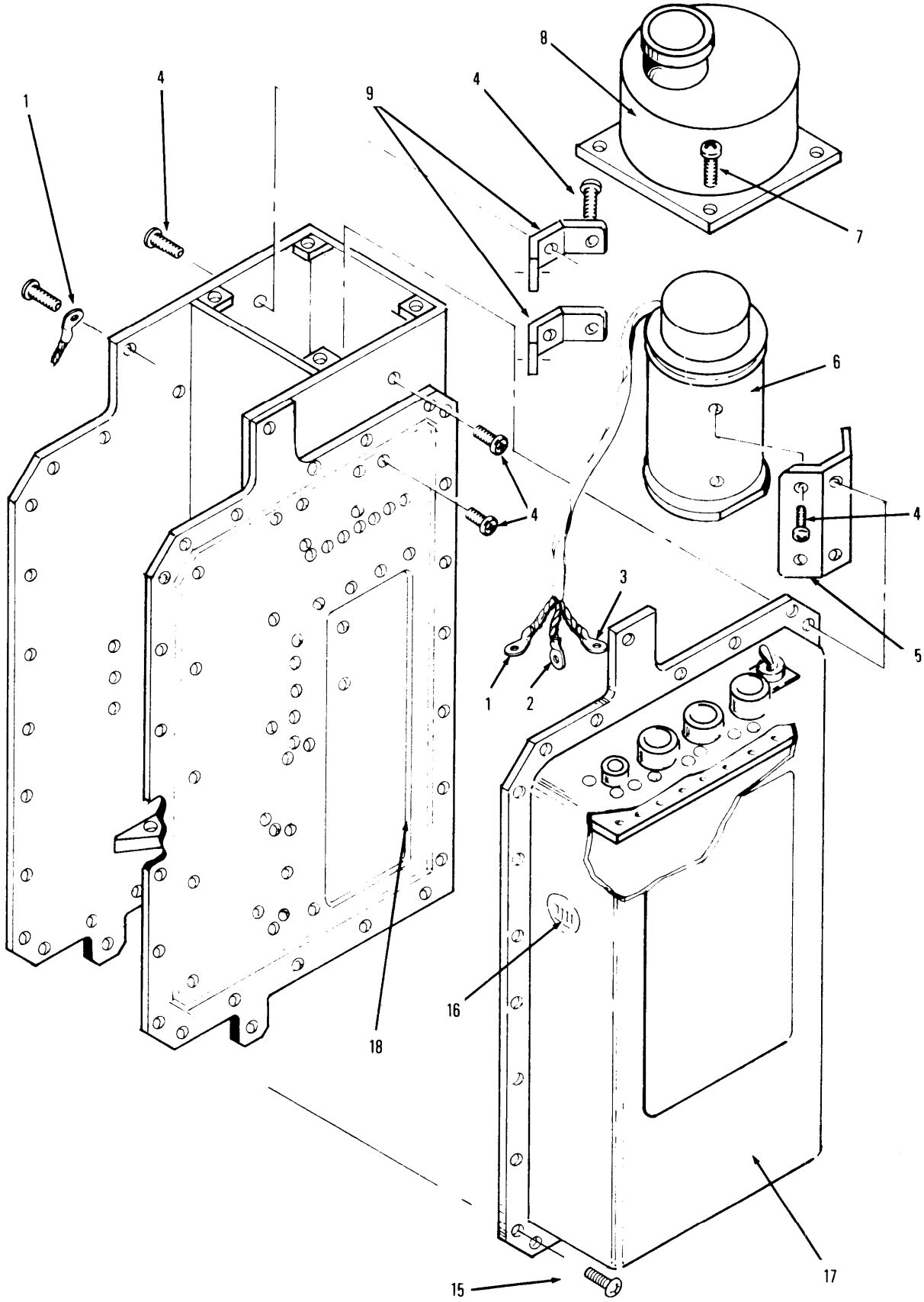

Figure 14-19. Control Panel Assembly, Controls, and Indicators (Sheet 3 of 5)

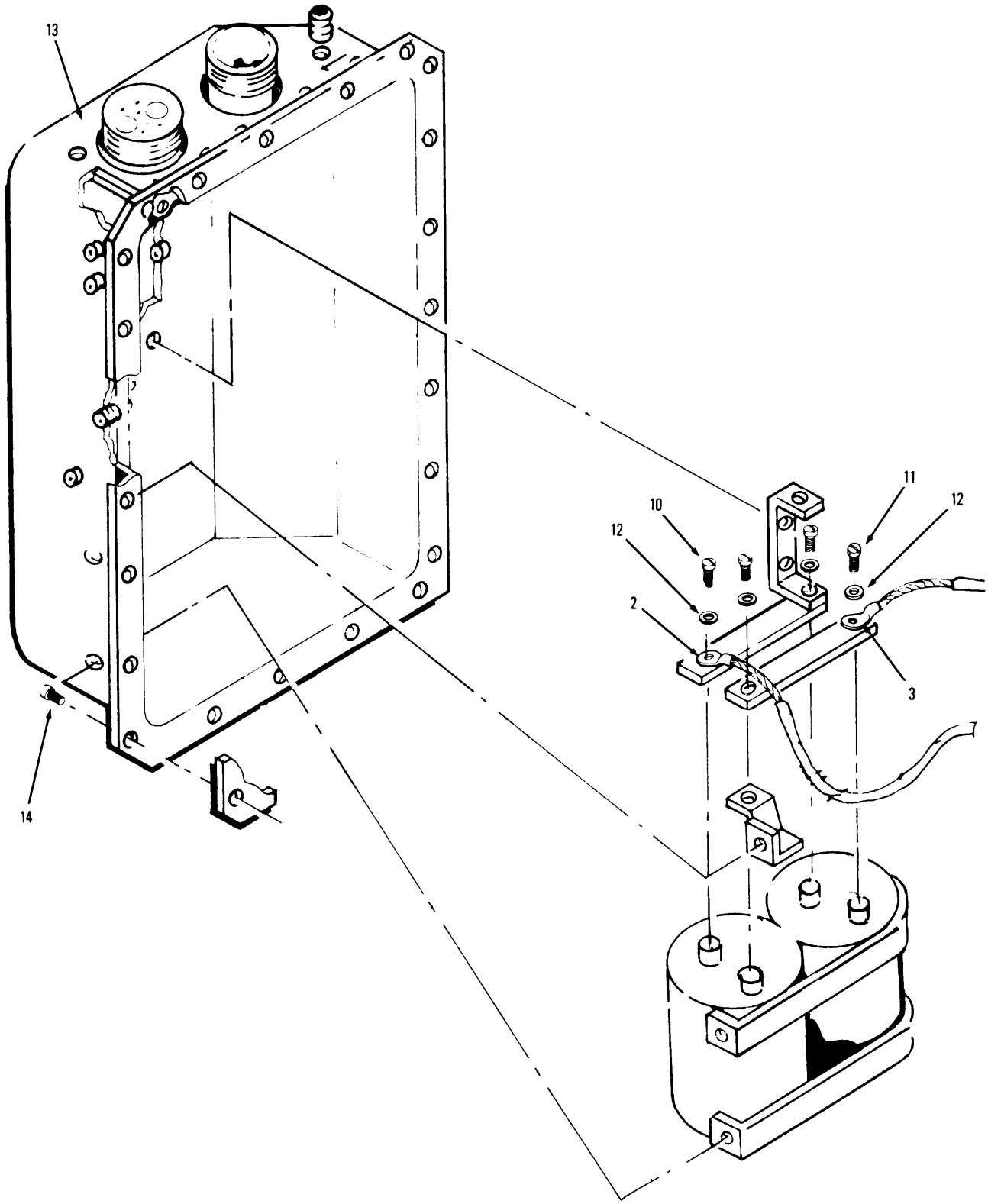

Figure 14-19. Control Panel Assembly, Controls, and Indicators (Sheet 4 of 5)

1. Terminal
2. Terminal
3. Terminal
4. Screw
5. Bracket
6. Motor
7. Screw
8. Plenum
9. Bracket
10. Screw
11. Screw
12. Washer
13. Cover
14. Screw
15. Screw
16. Time Meter
17. Cover
18. Chassis

FIGURE 14-19 Control Panel Assembly, Controls, and Indicator (Sheet 5 of 5)

Table 14-2 Troubleshooting-High Performance Rescue Hoist

CONDITION

TEST OR INSPECTION

CORRECTIVE ACTION

1. Boom assembly electric motor inoperative.

Ensure reaction plate (52, figure 14-27) and aircraft position switch S1 (figure 14-19) are positioned properly. Remove all electric power. Disconnect boom motor cable connector J5 (37, figure 14-16) from control panel.

Step 1. Ensure continuity is present between pins K and M of J5 connector.

Step 2. Ensure continuity is present between pins L and M of J5 connector.

If continuity is present, check boom limit and/or boom over torque limit switches.

If continuity is not present, replace boom motor, refer to paragraph 14-197.

2. Hoist boom does not swing full 205 degrees.

Remove all electric power. Disconnect boom motor cable connector J5 from control panel.

Step 1. Ensure continuity is present between pins B and F of J5 connector for counterclockwise limit switch with boom in clockwise position. If boom is in counterclockwise position no continuity should be present.

Step 2. Ensure continuity is present between pins A and G of J5 connector when boom is in counterclockwise position. If boom is in clockwise position no continuity should be present.

If continuity is present, adjust boom actuator limit switches, refer to paragraph 14-248. Replace boom position actuator and structure support, refer to paragraph 14-197.

3. Boom overtorque cw limit switch inoperative.

Disconnect connector J5 from control panel.

Continuity should be present between pins C and H of connector J5.

If continuity is present, adjust boom overtorque cw limit switch, refer to paragraph 14-251.

4. Boom overtorque ccw limit switch inoperative.

Disconnect connector J5 from control panel.

Continuity should be present between pins D and E of connector J5.

If continuity is present, adjust boom overtorque ccw limit switch (paragraph 14-251).

Table 14-2 Troubleshooting-High Performance Rescue Hoist

CONDITION

TEST OR INSPECTION

CORRECTIVE ACTION

5. Pendant BOOM OUT-IN switch inoperative.

WARNING

Remove all electrical power from the hoist before disconnecting pendant cable from pendant assembly.

Disconnect connector from pendant.

Step 1. With ohmmeter connected to pins A and B of pendant connector, place pendant BOOM OUT-IN switch to OUT, continuity should be present.

If continuity is not present, replace pendant.

Step 2. With ohmmeter connected to pins A and C of pendant connector, place pendant BOOM OUT-IN switch to IN, continuity should be present.

If continuity is not present, replace pendant.

6. Winch electric motor inoperative.

Disconnect winch motor cable connector J3 from control panel.

Step 1. Ensure continuity is present between pins A and G of connector J3.

Step 2. Ensure continuity is present between pins D and B of connector J3.

If continuity is present, replace the Control Panel assembly, refer to paragraph 14-191.

If continuity is not present, replace winch motor, refer to paragraph 14-254.

7. Winch motor temperature sensor inoperative.

Disconnect plug J3 from control panel.

Step 1. Ensure continuity is present between pins C and F of connector J3.

Step 2. Ensure continuity is present between pins H and E of connector J3

If continuity is present, replace winch motor, refer to paragraph 14-254.

8. Winch oil temperature sensor inoperative.

Disconnect boom head cable connector J6 from control panel.

Ensure continuity is present between pins E and F of connector J6.

If continuity is not present, replace over temperature sensor.

Table 14-2 Troubleshooting - High Performance Rescue Hoist

CONDITION

TEST OR INSPECTION

CORRECTIVE ACTION

9. Hoist up limit switch inoperative,

Disconnect Plug J6 from control panel. Ensure hook is not against boom head actuator.

Ensure continuity is present between pins A and B of connector J6.

If continuity is not present, adjust up limit switch, refer to paragraph 14-245.

10. Hoist inoperative - POWER ON light not on.

Step 1. Ensure 28 vdc power is available through circuit breaker.

If multimeter does not indicate 28 vdc, replace faulty circuit breaker.

Step *2.* Hoist input power check.

Disconnect connector J1 from control panel.

Ensure 28 vdc is present between pins A (+) and B (–) of connector J1.

Ensure 28 vdc is present between pins G (+) and B (–) of connector J1.

Replace input power cable

Replace bulb and press-to-test light.

Replace defective control panel, refer to paragraph 14-191.

11. Hoist control switch inoperative.

Remove all power. Disconnect connector J2 from control panel assembly.

Ensure ohmmeter indicates 0 ohms in OFF position to 500 ohms in FAST DOWN position between pins J and H of connector J2. Ensure ohmmeter indicates 0 to 500 ohms in FAST UP position.

Replace control pendant.

12. 10 foot caution light inoperative.

Step 1. Apply power and push press to test light to check bulb.

Step 2. Reel cable out until hook is 10 feet from boom head (caution light OUT).

Step 3. Ensure continuity is present between pins E and F in connector J4 at control panel end of cable.

Step 4. Reel cable IN until continuity is not present between pins E and F of connector J4 (8 to 10 feet of cable OUT). Adjust 10 foot caution light switch (paragraph 14-239). Replace caution light switch, refer to paragraph 14-213.

Table 14-2 Troubleshooting - High Performance Rescue Hoist

CONDITION

TEST OR INSPECTION

CORRECTIVE ACTION

13. One foot up deceleration limit switch inoperative.

Apply power and reel out cable until hook is more than 18 inches from boom head. Disconnect power. Remove limit switch drive assembly cover.

Step 1. Disconnect J4 connector from control panel and assure continuity is present between pins G and H of connector J4.

Step 2. Reel in cable using pendant switch.

No continuity should be present when hook approaches 12 to 18 inches of boom head actuator.

Remove limit switch drive assembly cover, locate one foot up deceleration limit switch cam. Reel out cable until hook is 12 to 18 inches from boom head Using ohmmeter between pins G and H of connector J4 adjust one foot up-deceleration limit switch cam until ohmmeter indicates open circuit. Install limit switch drive cover. Connect limit switch drive connector.

Adjust one foot limit switch, refer to paragraph 14-242.

Replace one foot up-limit switch, refer to paragraph 14-213.

14. Down limit switch inoperative.

Ensure cable is not reeled out beyond 250 feet.

Disconnect limit switch drive cable connector J4 from control panel.

Assure continuity is present between pins C and D of connector J4.

Connect J4 connector to control panel.

Reel out 247 feet of cable and ohmmeter should indicate open circuit.

Adjust limit switch drive assembly down limit switch (paragraph 14-235).

Replace limit switch (paragraph 14-213).

15. Down all-stop limit switch inoperative.

Reel out cable until three wraps of cable remain on drum.

Disconnect connector J4 from control panel. Ensure no continuity is present between pins A and B of connector J4.

Adjust down-all stop limit switch cam, refer to paragraph 14-231. Replace limit switch, refer to paragraph 14-213.

Table 14-2 Troubleshooting - High Performance Rescue Hoist

Deleted

14-157. Installation — High Performance Hoist. a. Release reaction arm from shipping stud. Remove pin (30, figure 14-27) and rotate reaction arm (9) 180 degrees and reinstall pin (30).

N O T E

The rescue hoist assembly should be placed in position 1 or 3 in the cabin (figure 14-2). Helicopters equipped with personnel rescue hoist provisions and subject to frequent installations of the rescue hoist kit should be rigged to provide maximum cyclic control capability for the side opposite the hoist (desirable, but not mandatory). Refer to Chapter 5, Section II for swashplate setting. If only one auxiliary fuel cell is used, it should be opposite the hoist.

b. Select desired location and remove two release pins (31) from bottom of base plate (33).

CAUTION

If reaction arm is moved and hits mechanical stops before holes align, move reaction arm in other direction until holes align.

c. Move reaction plate (52) until lower base plate numbered holes align with release pin holes. Plate (52) must not be rotated more than 180 degrees.

d. Lock reaction plate (52) in selected position by replacing release pins (31) through holes in bottom of base plate.

e. Assure reaction plate and base plate (33) are positioned for desired installation location, refer to figures 14-20 and 14-21.

CAUTION

Recommend two or more persons handle hoist during installation.

f. Lift hoist into aircraft.

g. Release quick disconnector adapters (23, 32, figure 14-27) at both ends of hoist.

CAUTION

Boom will not clear door frame when hoist is installed in the number 2 or 3 position, unless quick disconnect adapter (23, figure 14-27) mates with the rear stud on the aircraft ceiling.

h. Position hoist so quick disconnect adapters on bottom and top of hoist mate with anchor studs located on helicopter ceiling and floor.

CAUTION

Assure reaction arm and hoist base connect to anchor studs on floor, do not overtighten vertical adjustment to prevent hoist binding and damage to helicopter structure.

i. Adjust vertical adjustment shaft (17) until quick disconnect adapter (23) is firmly connected to anchor stud on ceiling.

N O T E

If an aft facing troop seat is desired to be located in the number one position, the following modification to troop seat is required.

(1) Remove quick disconnect (1, figure 14-20.1) from left rear leg of troop seat.

(2) Shorten left rear leg so that the seat will sit level in the aircraft with the hoist installed. This will require approximately 3.375 inches to be removed from the leg. However, this length may vary from aircraft to aircraft.

(3) Locate and drill a **0.249 to 0.255** inch hole completely through the shortened leg with center of the hole **0.373 to 0.383** from bottom of leg.

(4) Install previously removed quick disconnect (1) using bolt (3), washer (4), and nut (5) on shortened leg.

(5) Install troop seat with shortened leg attached to stud located on top of reaction arm assembly (43, figure 14-16).

NOTES

1. High performance hoist is adaptable to other models of aircraft.
2. Reaction plate should be rotated counter-clockwise to number 4 position.
3. Reaction plate should be rotated clockwise to number 1 position.

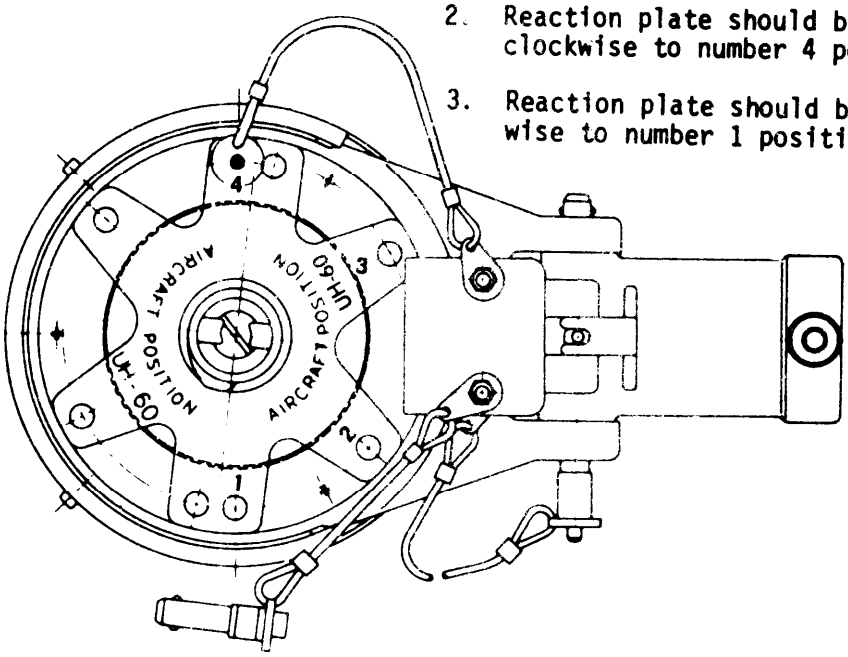

Figure 14-20, Hoist Baseplate Settings

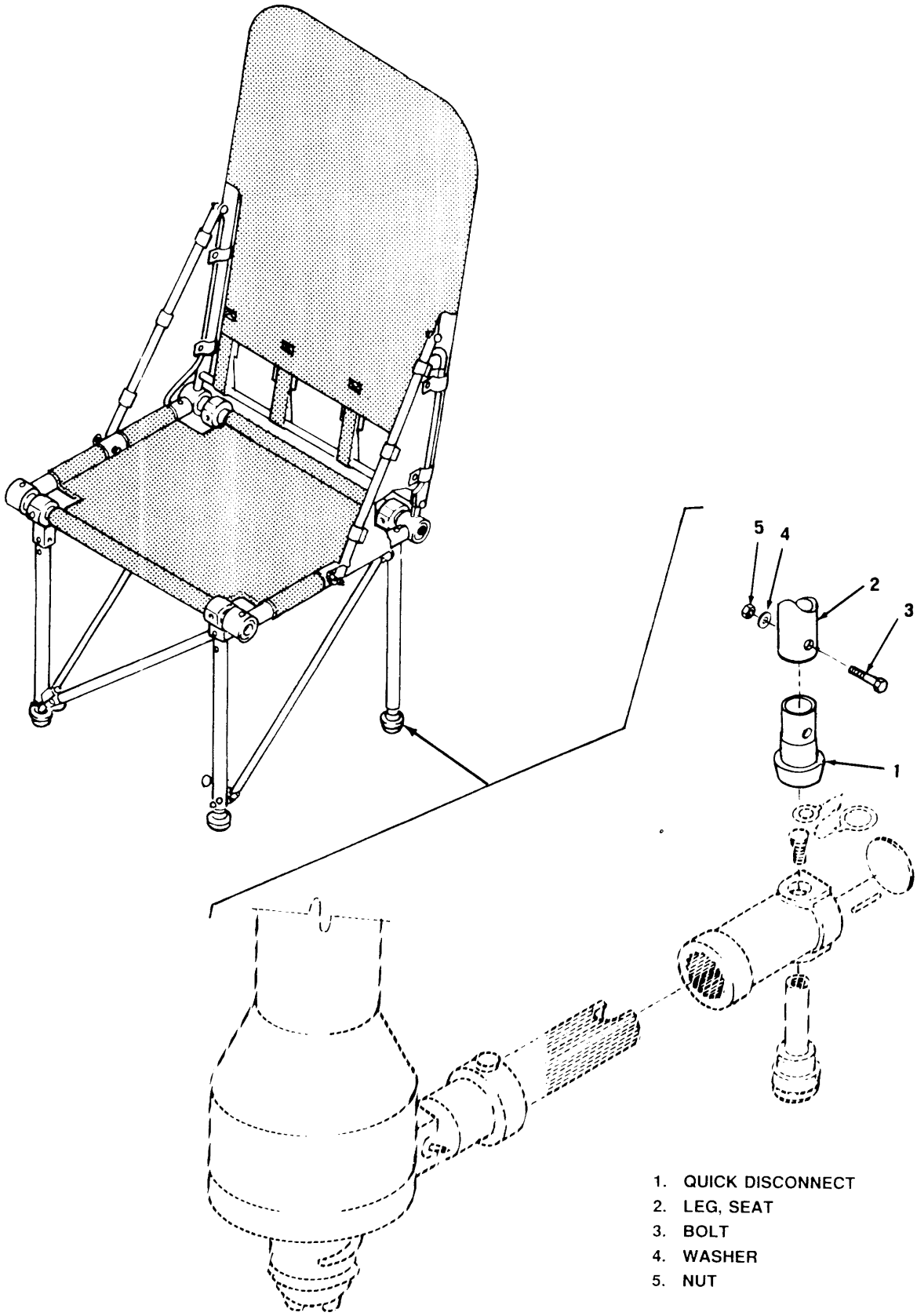

Figure 14-20.1 Hoist/Troop Seat Modification

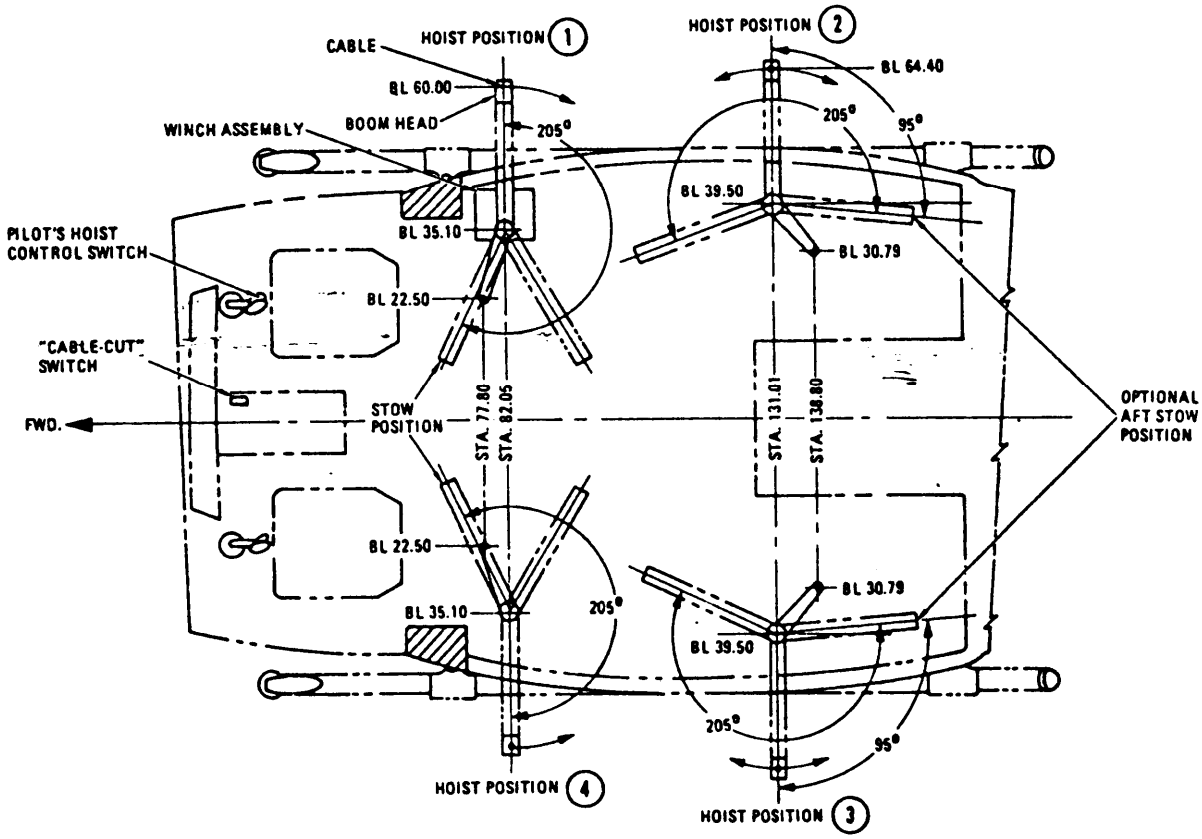

Figure 14-21. Hoist installation Positions

j. Remove shorting connector from cable cutter cartridge (48) (figure 14-16).

k. Install cable cutter harness (30) connector by threading into cable cutter receptacle.

l. Set aircraft position switch located on hoist control panel assembly to position corresponding with hoist installation in helicopter.

m. Open cabin ceiling soundproofing and connect input power cable (38).

n. Reinstall cabin ceiling soundproofing.

o. Deleted.

p. Perform operational checks, refer to TM 55-1680-320-23 & P.

o. While supporting traction sheave assembly (25), remove shaft (39) from bearing (36) in housing assembly (53). Slide traction sheave out through top of housing. Remove packing (38) and if required, key (40) from shaft (39).

p. Remove sleeve spacer (34) and press out bearing (36), seal (37) and shim (35) from housing assembly (53).

q. Remove nut (49), washer (50), and bearings (8) from spur gearshaft (7) (only when required to replace a damaged part).

r. Remove spur gear (51), worm gear (52), key (6) and spur gearshaft (7) from bore in housing assembly (53) (only when required to replace a damaged part).

s. Remove screw (60) and flex drive shaft assembly (61) from housing assembly (53).

14-162. Inspection — Boom. a. Inspect boom head assembly (47, figure 14-16) for nicks, scratches or other damage.

b. Inspect attaching parts on boom for security, corrosion and proper installation. Check threaded holes for thread damage.

c. Inspect traction sheave, cable guide and rollers for condition and security.

14-163. Repair or Replacement — Boom.

a. Replace damaged hardware.

b. Replace or repair damaged or malfunctioning components.

c. Repair nicks, scratches and corrosion, refer to TM 55-1500-204-25/1.

14-164. Assembly — Boom (AVIM). Refer to figure 14-22.

a. Install machine key (6, figure 14-22), worm gear (52) and spur gear (51) on spur gearshaft (7).

b. Determine shim requirements for spur gearshaft endplay per steps below (refer to figure 14-22):

(1) Press fit one bearing (8) onto each end of spur gearshaft (7) measure distance from outside of bearing to outside edge of bearing (measurement a).

(2) Measure width of housing assembly (53) from side to side where covers (10) mate with housing (measurement b). Measure depth in covers (10) from mating surfaces to bottom of bearing bores (measurement c).

(3) Add measurements obtained in steps (1) and subtract measurement obtained in step (2).

(4) When housing (53) and covers (10) are assembled, spur gearshaft (7) must fit in housing with **0.002 to 0.005** inch end play between gearshaft and each cover. If necessary, prepare two equal shims (9) using measurement obtained in step (3).

c. After determining end play and shim thickness required, remove one bearing (8), spur gear (51) and worm gear (52).

d. Install spur gearshaft (7) into housing assembly (53). Install worm gear (52) with gearhub facing away from housing on open end of spur gearshaft (7). Install spur gear (8), with gearhub facing towards housing, on open end of spur gearshaft.

e. Press bearings (8) on gearshaft (7). Install shims (9), washer (50) and nut (49).

f. install flex drive shaft assembly (61) in housing assembly (53) and secure with screw (60).

g. Press bearing (43) into retainer assembly (44), and install seal (42). Install shim (35), bearing (36) and seal (37) on sleeve shaft (39). Install packing (41) on retainer assembly (44).

h. Insert traction sheave assembly (25) through top of housing assembly (53) until traction sheave bore aligns with bearing (43). Install packing (38) on shaft (39) and slide shaft into housing assembly (53) and through traction sheave. Ensure packing (38) and key (40) are correctly positioned in traction sheave.

i. Install retainer assembly (44), bearing (43) and seal (42) into housing (53) and install 3 screws (45).

NOTE

Boom head brake assembly (21) and friction clutch (46) must be installed on sleeve shaft (39) with roller end positioned away from housing assembly. See detail.

j. Install friction clutch on retainer assembly (44) on end of sleeve shaft (39). Install gear assembly (48) and thrust washers (22) on pin (23).

k. Install packing (18) in cover (10) and install cover (10) on housing (53).

l. Install brake assembly (21) on end of shaft (39) and gear assembly (19) on pins (23) and thrush washer (20).

m. Install packing (18) in cover (10) and install cover (10) on housing (53).

n. Install sleeve spacer (31) and cable guide roller (30), bolt (23), washer (32) and nut (33) if removed.

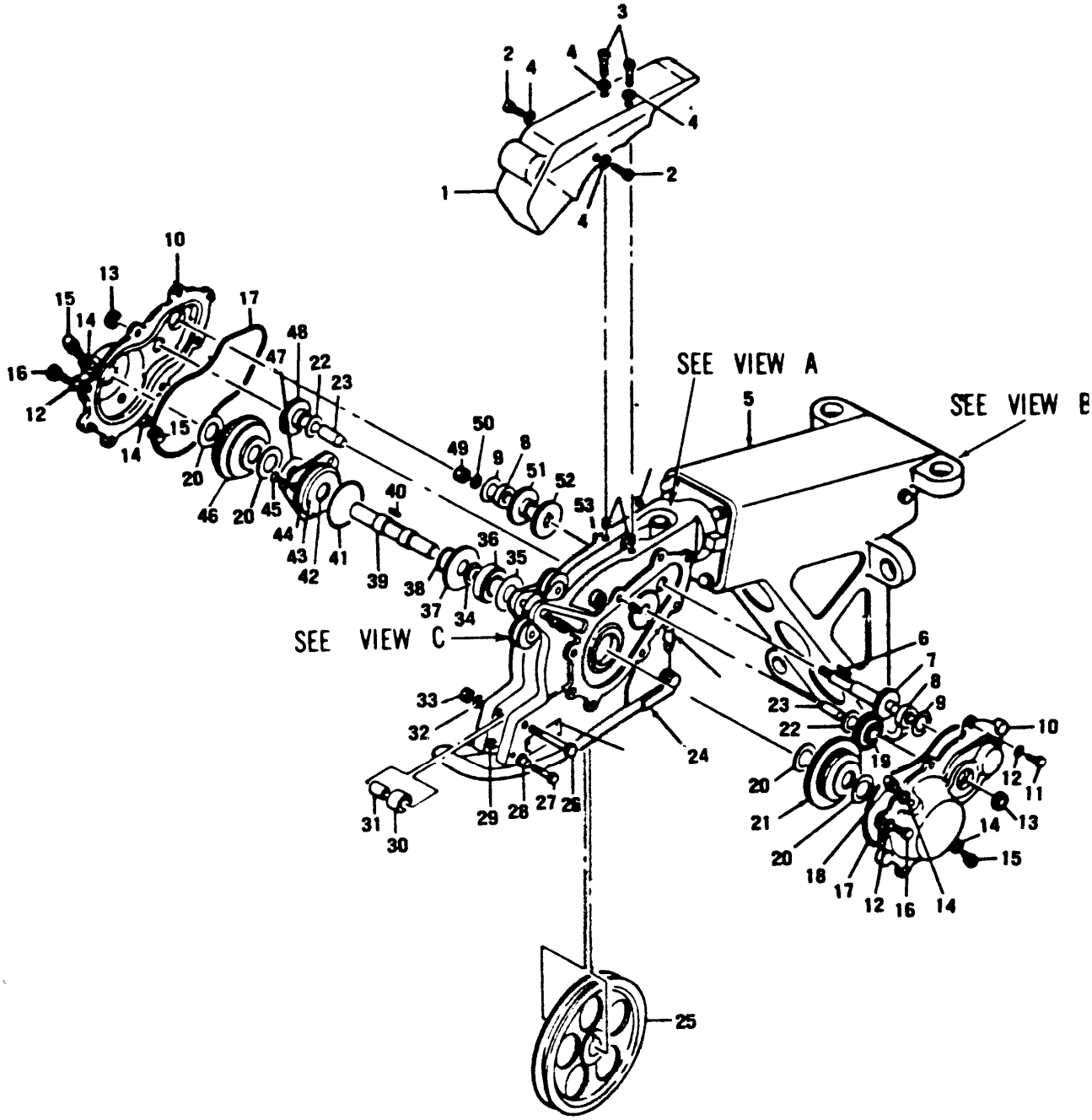

Figure 14-22. Boomhead Assembly (Sheet 1 of 4)

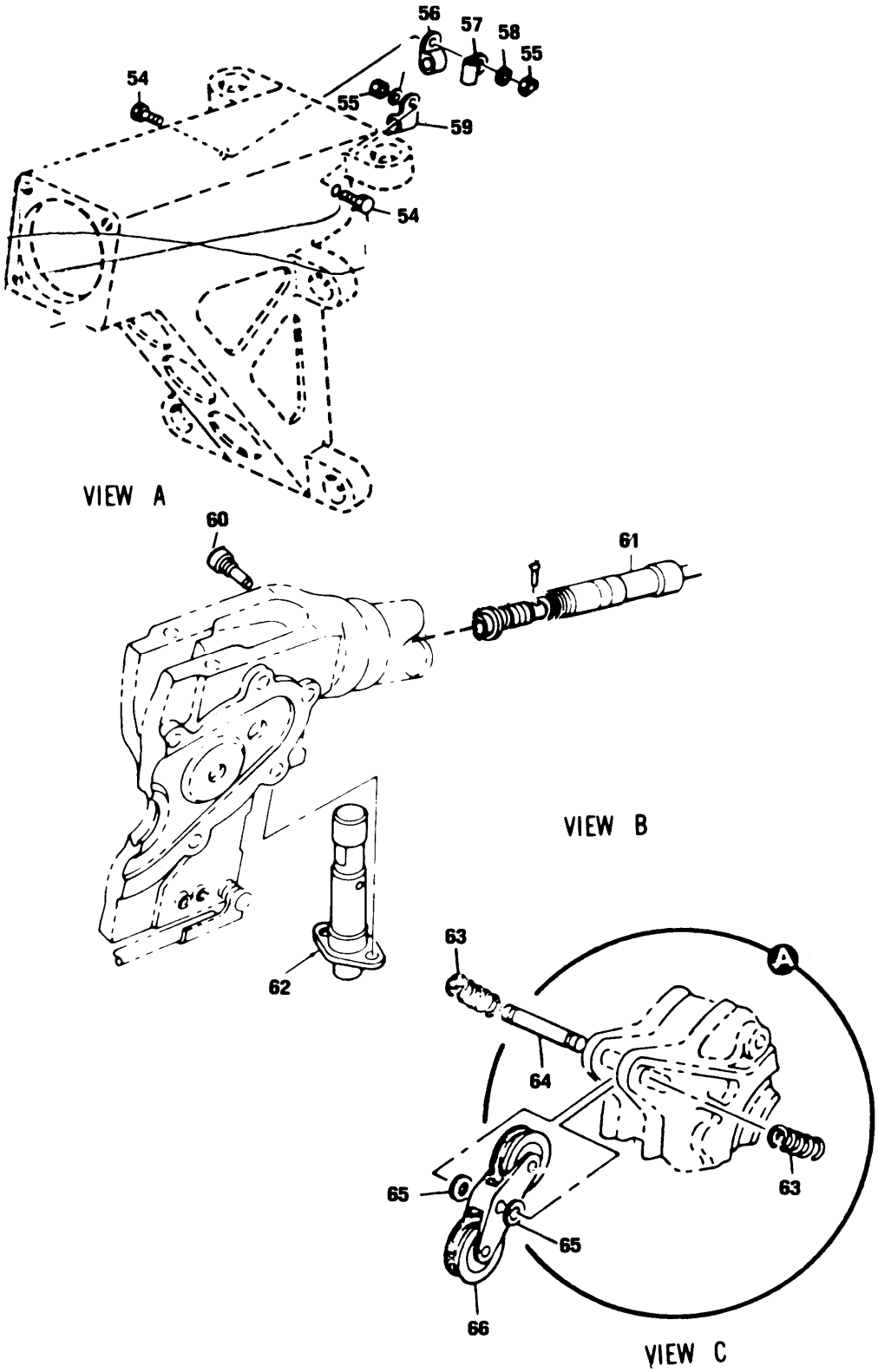

Figure 14-22. Boomhead Assembly (Sheet 2 of 4)

1. Pressure Cover Assembly
2. Screw
3. Screw
4. Washer
5. Boom Assembly
6. Machine Key
7. Spur Gearshaft
8. Bearing
9. Shim
10. Cover Assembly
11. Bolt
12. Washer
13. Sight Indicator
14. Packing
15. Machine Plug
16. Bolt
17. Packing
18. Vent Breather
19. Gear Assembly
20. Thrust Washer
21. Boom Head Brake Assembly
22. Washer Bearing
23. Pin
24. Actuator Assembly
25. Traction Sheave Assembly
26. Bolt
27. Socket Cap Screw
28. Switch, Stop
29. Nut
30. Cable Guide Roller
31. Sleeve Spacer
32. Washer
33. Nut
34. Sleeve Spacer
35. Shim
36. Bearing
37. Seal
38. Packing
39. Sleeve Shaft
40. Machine Key
41. Packing
42. Seal
43. Bearing
44. Retainer Assembly
45. Screw
46. Friction Clutch
47. Shim
48. Gear Assembly
49. Nut
50. Washer
51. Spur Gear
52. Worm Gear
53. Housing Assembly
54. Bolt
55. Nut
56. Loop Clamp
57. Loop Clamp
58. Washer
59. Loop
60. Screw (Lockwire—C155)
61. Flex Drive Shaft Assembly
62. Cutter Cartridge
63. Helical Spring
64. Grooved Pin
65. Washer
66. Pressure Roller Assembly

Figure 14-22. Boomhead Assembly (Sheet 3 of 4)

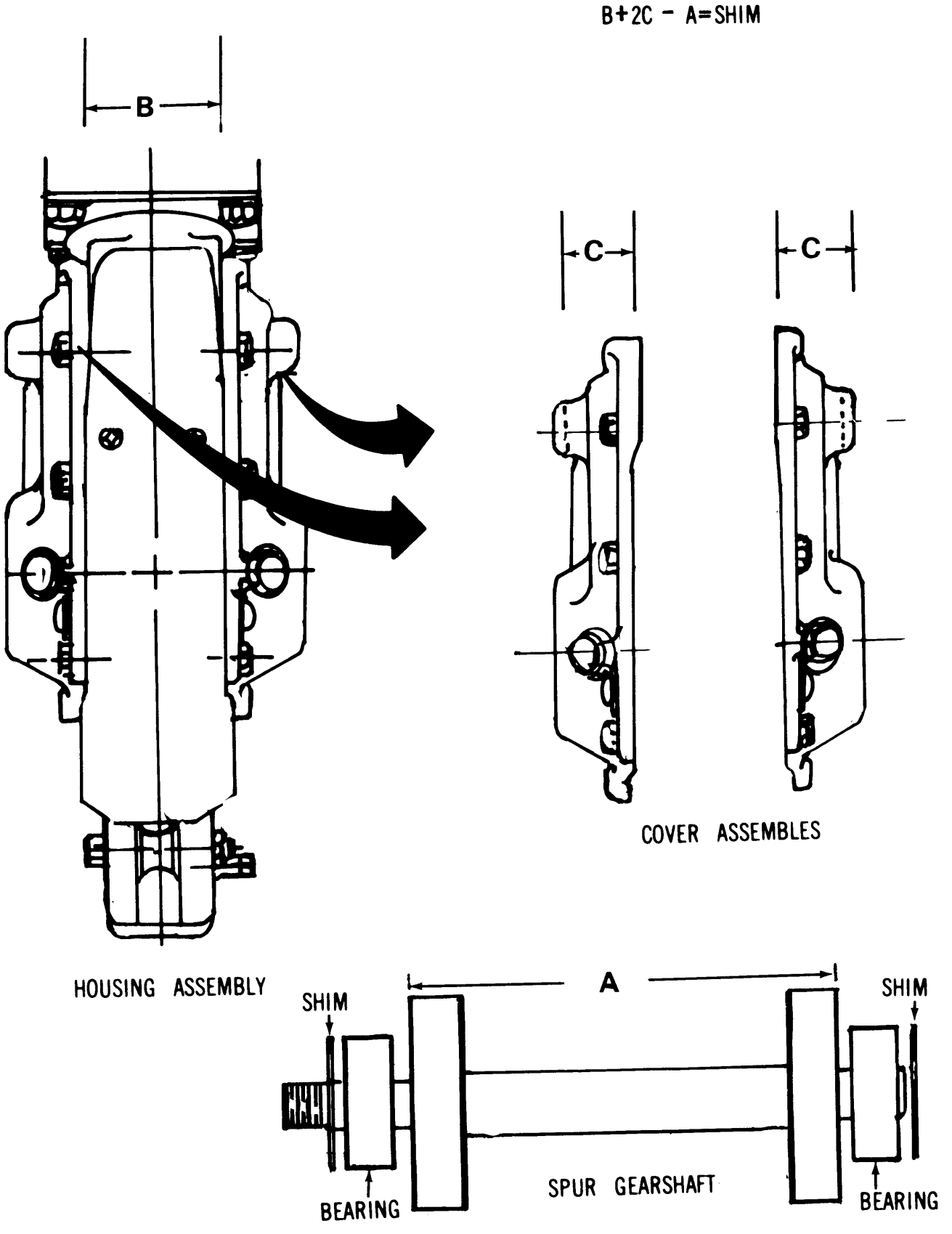

Figure 14-22. Boomhead Assembly (Sheet 4 of 4)

o. Install switch stop (28) on socket cap screw (27) and nut (29) if removed.

p. Install actuator assembly (14, figure 14-24) and spring (12) on housing assembly (9) with bolt (13) and nut (15) if removed.

q. Install cable cutter assembly (paragraph 14-171).

r. Install roller assembly (66), two washers (65), grooved pin (64) and two helical springs (63).

s. Install clamps (56, 57, 59), bolts (54), washers (58) and nuts (55).

t. Install cover assembly (1), washers (4) and screws (2 and 3).

14-165. Installation — Boom. a. Attach boom head assembly (47, figure 14-16), to winch (27) with four bolts (19) and washers (20). Do not tighten bolts at this time.

b. Position electrical cable (35) and flexible shaft (58) across top of winch.

c. Attach bracket (25), handles (24.1), spacer (26) to upper support assembly (21) and winch (27) with four bolts (22) and washers (24).

d. Torque eight bolts (19 and 22) **160 to 190** inch-pounds.

e. Connect thermal switch cable connector (35).

f. Connect flexible shaft (58) to winch (27).

g. Connect boom head cable (35) to control panel (5).

h. Install hoist cable, refer to paragraph 14-166.

14-166. CABLE, HIGH PERFORMANCE HOIST.

14-167. Description — Hoist Cable. The hoist cable is a stranded steel cable 258 feet long with 250 feet of usable cable.

14-168. Removal — Cable. a. Remove upper support cover, refer to figure 14-23.

WARNING

Replacement cables should be examined to assure that the shank of swedgeball end of cable is marked as follows: Letter "B" or "C" followed by dash and an odd number of not less than 11 and a dash followed by a number (even or odd).

WARNING

If cable is to be reinstalled, take proper precautions to protect cable from damage. Roll on to improvised drum. Care must be taken not to pull cable taut around cable guide/roller since kinking of the cable could result.

WARNING

Cable cutter connection pins must be shorted with a shorting connector to prevent inadvertent firing of cable cutter cartridge.

NOTE

Cable can be replaced with hoist installed in helicopter.

b. Remove pressure roller cover, refer to figure 14-23.

c. Disconnect cable cutter connector (30) figure 14-16 and install shorting connector.

d. Remove hook assembly, refer to para 14-184.

e. Reel out cable with pendant HOIST DOWN switch until limit switch stops the winch motor.

f. Remove override switch cap nut.

g. Press and hold OVERRIDE switch.

CAUTION

Do not unreel cable beyond one wrap remaining on drum to prevent cable from kinking.

h. Slowly reel out remaining cable with pendant HOIST DOWN switch until cable retainer is accessible.

i. Remove power from hoist.

j. Insert holding screw and remove cable retainer.

k. Remove cable cutter cap and anvil, refer to paragraph 14-172.

CAUTION

Do not turn winch drum on hoist when cable is removed to prevent misalignment of drum and limit switch timing.

l. Feed cable out of boom through keyhole slot in cable guide and pressure rollers.

14-169. Inspection — Cable. a. Clean the complete length of hoist cable using a clean, heavy, lint free cloth held firmly around cable. The cloth will aid in the removal of foreign particles and in detection of broken wires by snagging wire ends.

b. Inspect cable for kinks, abrasion, bird caging and interference as follows:

(1) Abrasion caused by an improperly adjusted or defective winch drum is evidenced by localized worn sections of the outer hoist cable wires. Proper adjustment of the winch drum during cable installation will prevent this type of wear.

(2) Overloading of hoist cable will normally result in broken wires. Necking-down of a section of cable is an indication of broken core wires. A cable that has been knowingly overloaded should be replaced immediately even if no obvious physical damage is detected.

(3) Kinks are usually man-made defects in a hoist cable, caused by a loop in the cable being pulled up tight, resulting in a sharp, permanent bend in the cable. Kinks are identified as two types, open and closed. An open kink is caused by pulling a loop tight, creating a sharp permanent bend which tends to open the lay of the cable. A closed kink is caused in the same manner, but creates a sharp permanent bend which tends to close the lay of the cable. Continued use of a kinked cable creates additional abrasion and subsequent early failure of the cable, .A kinked cable is cause for replacement.

(4) A bird caged cable has stretched or untwisted the outer wraps of wire strands. Severe bird caging will result in a small cocoon being formed by the outer cable strands.

c . Do not attempt any repair to hoist cable. No broken wires, strands kinking, corrosion, or bird- caging of the cable is allowed. Flat spots on the outer cable strands is evidence of cable misrouting or misalignment. Cables with flat spots worn into the outer strands should be replaced and routing and cable alignment (under tension) should be checked. Cable should not touch the cable cutter, or other items. Rollers must turn freely and not be frozen or jammed.

WARNING

Do not substitute any other hoist cable for the correct cable part number.

d. Visually Inspect storage drum for damage and corrosion.

e . Check for free operation of up limit switch actuator.

NOTE

Cable can be replaced with hoist installed in helicopter.

14-170. installation - Cable. a. Lay cable out flat from side of helicopter in line with boom axis. Install cable through keyhole slot, raise rollers and insert cable over sheave. Guide cable through cable cutter. Make one wrap around drum and trap ball in drum pocket with retainer. Refer to figure 14-23.

WARNING

Recommend applying tension to cable during installation in order to assure tight fit on drum. If tension is applied, cable must not be bent over small radii.

b . Tighten retainer and check cable lay to ensure cable falls in proper groove on drum.

c . Actuate pendant HOIST UP switch to slowly reel in cable until approximately 9 wraps are on the drum. Refer to paragraph 14-231 for adjustment of downall stop.

WARNING

It is critical that both the anvil and the cable cutter cap (figure 14-23) are installed. If either one is not installed, the cable cutter will be rendered inoperative.

d. Install anvil and cable cutter cap, refer to figure 14-23.

WARNING

Before reeling in cable, wrap a soft cotton cloth around the cable. Hold the cloth with gloved hand about two feet below the boom head. The cloth will clean the cable and will snag on any broken wire. Operate the control pendant to reel up the cable at low speed. Keep downward pull with gloved hand around cloth to keep cable taut as it is reeled back on to hoist drum. Care must be taken not to pull cable taut around cable guide/roller in order to avoid kinking of the cable.

e. Check to see that cable is running smoothly over sleeve and is running through slot in cable cutter without rubbing.

f. Reel in remaining cable leaving 15 feet extended and check each cable wrap on drum for proper lay.

g. Check that CAUTION light is ON when end of cable is within 8 to 10 feet of boom head.

h. Adjust caution light (10 foot limit) cam, refer to paragraph 14-240.

i. Install heat shrink tubing.

j . Replace hook assembly, refer to para 14-184.

k. Perform operational check, refer to paragraph 14-155.

l. Install upper support cover.

m. Replace pressure roller cover assembly.

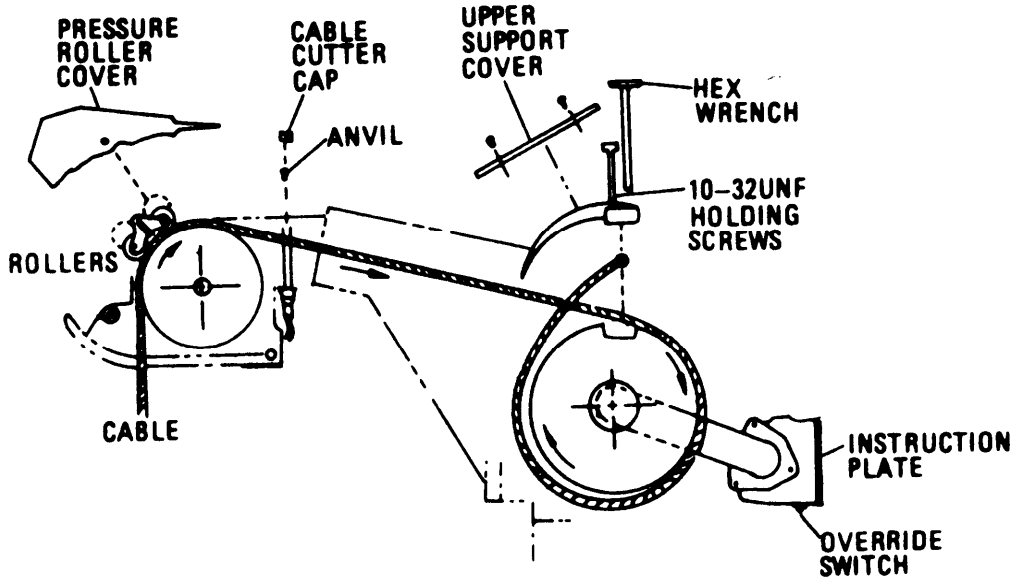

Figure 14-23. Cable Replacement

14-171. CABLE CUTTER ASSEMBLY.

14-172. Descrlptlon - Cable Cutter. A ballistic operated cable cutter allows the hoist cable to be sheared during an emergency. The CABLE CUT switch on the pilots pedestal or on the hoist control panel permits either pilot or hoist operator to shear the cable.

14-173. Removal - Cable Cutter Assembly After firing. a. Turn battery switch - OFF.

b. Disconnect cable connector (30, figure 14-16).

c. Remove pressure roller cover.

d. Remove two bolts (1, figure 14-25) from boom head and remove cable cutter.

e. Remove cap (2).

f. Remove and discard anvil (3).

g. Remove and discard shear screw (4).

h. Remove and discard expended cartridge (5).

i. Remove and discard cutter (6) with packings.

14-174. Cleaning — Cable Cutter Assembly. Clean powder deposits with cloth dampened with solvent (C261). Remove corrosion deposits with crocus cloth (C68).

14-175. Inspection - Cable Cutter Assembly. a. Inspect barrel and boom for corrosion, evidence of damage and serviceable condition.

b. Inspect power cable for continuity, frayed wires, wear or abrasion.

c. Inspect cartridge and replace if deteriorated because of corrosion or other damage.

d. Record date of manufacture and corresponding date of installation of new cartridge on a strip of white adhesive tape. Locate tape on the control box in vicinity of the cable cut switch.

NOTE

The cartridge has a combined "shelf life" and installed life of not more than 5 years from the date of manufacture. The maximum installed life is 3 years. Cartridge replacement is mandatory when the maximum combined shelf and installed life of 5 years or max. installed life has expired.

14-176. Repair Cable Cutter Assembly. a. Replace all parts that are corroded and cannot be cleaned.

b. Repair or replace defective electrical wiring and connectors as required.

14-177. Installation - Cable Cutter Assembly. Refer to figure 14-25.

a. Install packing (8) on cutter (6).

b. Align shear screw holes (10 and 11) and Install shear screw (4).

c. Install packing (7) on cartridge (5).

d. Install cartridge in barrel (9).

e. Install anvil (3) in barrel (9).

f. Install cap (2) on barrel.

g. Install assembled cable cutter in boom with two bolts (1).

14-178. CABLE CUTTER CARTRIDGE.

WARNING

The CABLE CUTTER CARTRIDGE is an explosive device and must not be exposed to heat, stray voltage or static electricity.

14-179. Description - Cable Cutter Cartridge. The ballistic cartridge is an electrically detonated explosive device that actuates the cable cutter to shear the cable during an emergency.

14-180. Removal - Cable Cutter Cartridge. a. Turn OFF battery switch.

WARNING

Cable cutter connector pins should be shorted with a shorting connector to prevent inadvertent firing of explosive cartridge.

b. Disconnect cable connector (30, figure 14-16) from cartridge.

c. Unscrew cartridge (5, figure 14-25) from barrel (9) in boom.

1. Cable - Cable Cutters
2. Cable - Thermal Switch
3. Cable - Limit Switch
4. Clamp
5. Switch - Up-Limit
6. Actuator
7. Gasket
8. Bolt
9. Housing - Boom Head
10. Washer-Aluminum
11. Screw
12. Spring Torsion
13. Bolt
14. Actuator
15. Nut
16. Screw
17. Guide - Cable
18. Bolt
19. Roller - Cable
20. Spacer
21. Washer -Thin Aluminum
22. Nut
23. Nutplate
24. Splice
25. Nut
26. Washer -Thin Aluminum

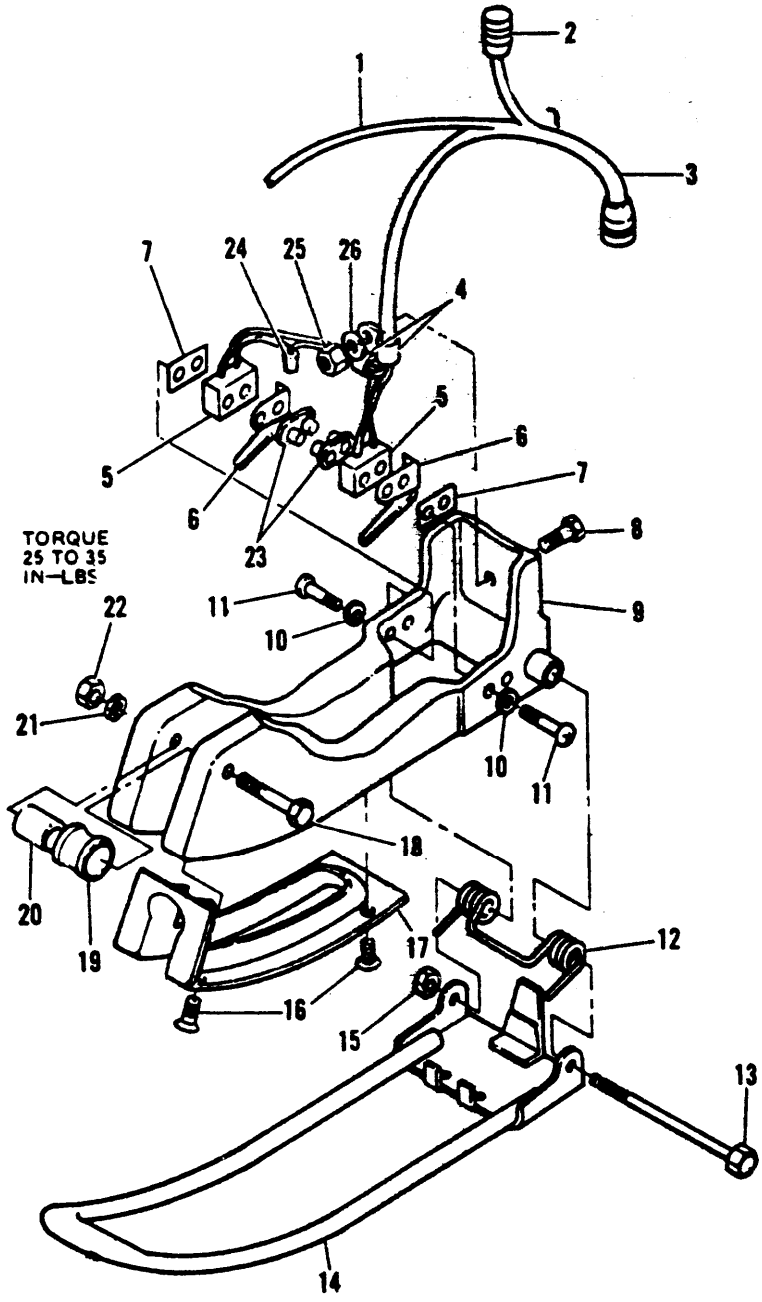

Figure 14-24. Cable Roller, Guide, and Up-Limit Switches

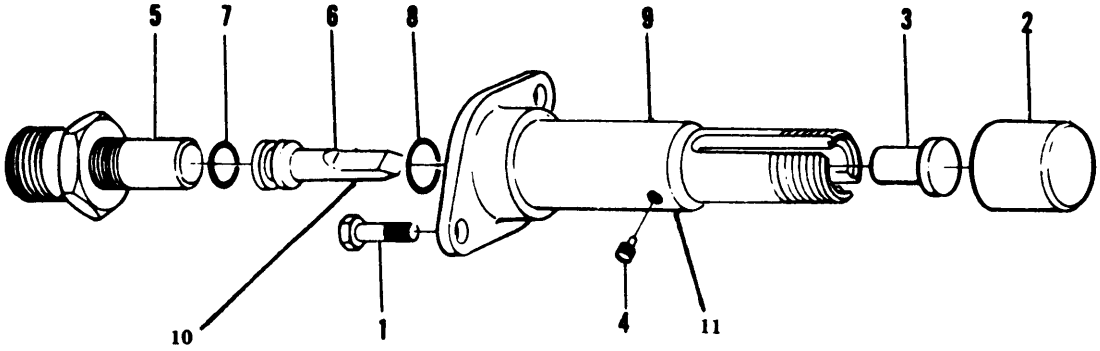

1. Bolt (Lockwire C155)
2. Cap
3. Anvil
4. Shear screw
5. Cartridge (Lockwire C155)
6. Cutter
7. Preformed packing
8. Preformed packing
9. Barrel
10 Shear screw hole
11 Shear screw hole

Figure 14-25. Cable Cutter Assembly

14-181. Inspection — Cable Cutter cartridge. a. Inspect barrel and boom for corrosion and evidence of damage.

b. Inspect cartridge for condition and date. Date of manufacture should indicate that more than three years remain on cartridge.

14-183. Installation — Cable Cutter Cartridge. Thread cartridge (5, figure 14-25) into barrel (9) in boom.

CAUTION

Connector (30, figure 14-16) is not connected until hoist is installed in aircraft.

14-184. CABLE HOOK.

14-185. Description — Cable Hook. The hook assembly is connected to the hoist cable by the carrier assembly. The hook assembly swivels 360 degrees rotation and incorporates a spring actuated safety latch and a quick release pin (19, figure 14-26) to prevent accidental release of cargo.

14-186. Removal — Cable Hook. a. Extend hoist cable a minimum of two feet from boom head.

b. Remove carrier lock spring (6, figure 14-26) from carrier (5 and 13). Unscrew carrier retainer (13).

c. Pull cable hook (15).

d. Remove cap seal (9).

NOTE

It may be necessary to insert a rod along cable from top of bumper and push retainer (7) free.

e. Push cable through carrier assembly (5).

f. Remove retainers (7). Pull cable (1) through bumper assembly.

14-187. Cleaning — Cable Hook. Clean hook with cloth dampened with solvent (C205).

14-188. Inspection — Cable Hook. a. Inspect hook for visible damage and freedom of movement about swivel.

b. Check operation of hook safety latch and condition of safety latch spring.

c. Check condition of retainers, cap seal, and carrier assembly.

d. Inspect ball end of cable assembly and cable connection for condition and security.

e. Inspect cable for broken strands or other damage.

f. Inspect for corrosion and damage of striker disc, bumper and carrier assembly.

14-189. Repair — Cable Hook. Replace damaged components as required.

14-190. Installation — Cable Hook.

WARNING

Before installing the cable hook, refer to paragraph 14-145.43, examine the cable end for presence or absence of a heat shrink plastic tubing. If the tubing sleeve is missing or loose on cable a new heat shrink plastic sleeve should be installed on cable. Install new sleeve of 3/8" inside diameter, NSN 5970-00-954-1624, cut to 3 1/2 to 3 3/4 inch length; by sliding the sleeve over the swedge ball to where the lower end aligns with end of the shank of the ball. Heat shrink the sleeve tightly in place on the cable.

a. Feed winch cable through bumper (4).

b. Position retainers (7) on cable over ball.

c. Install preformed packing (8) on retainers (7).

d. Pull cable with retainers into bumper until retainers and ball are seated in carrier (5).

NOTE

Ensure that flat side of cap seal is up.

e. Install cap seal (9) in carrier (5).

f. Thread carrier retainer (13) into carrier (5).

g. Align carrier locking holes and install carrier lock spring (6).

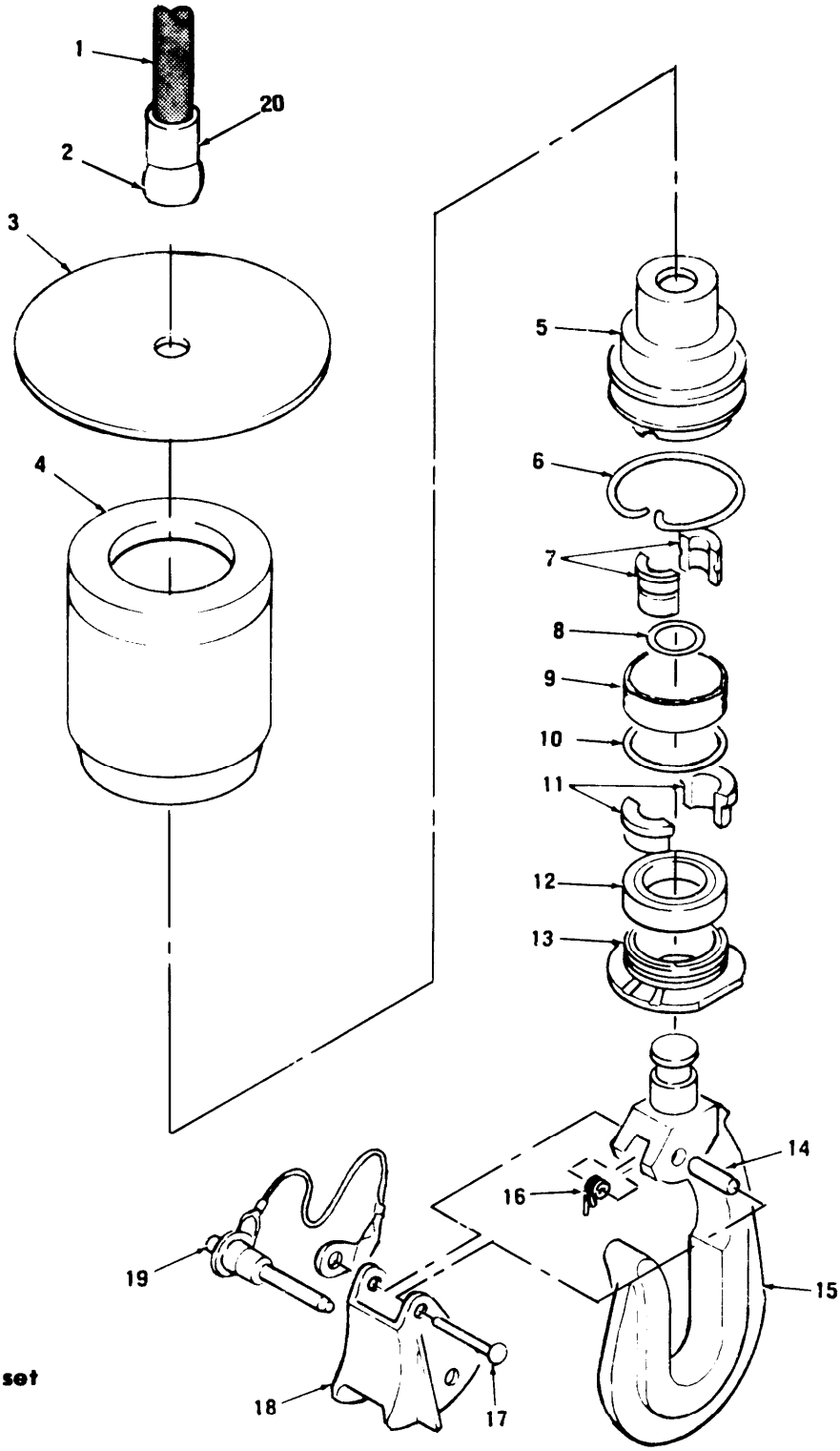

1. Cable
2. Swedge Ball
3. Striker Disk
4. Bumper
5. Carrier
6. Carrier Lock Spring
7. Retainers
8. Performed Packing
9. Cap Seal
10. Performed Packing
11. Hook Retainers
12. Bearing
13. Carrier Retainer
14. Spacer
15. Cable Hook
16. Spring
17. Rivet
18. Keeper
19. Quick Release Pin
20. **Sleeving Shrink Fit Tubing**

CAUTION

5 and 13 are matched set

Figure 14-26. Hook and Bumper.

14-191. CONTROL PANEL ASSEMBLY.

14-192. Description — Control panel. The control panel (figure 14-19) serves as the control center for the entire high-performance hoist system. It accepts signals from either the hoist operator or pilot to extend or retract rescue boom, and reel out or reel in cable. The pilot has priority in hoist operation and can override hoist operators actions at any time. In addition, special circuitry provides a continuously variable output voltage which is applied to hoist motor to permit operator to adjust cable speed to suit the mission. Since the variable output voltage limits cable speed to approximately 250 feet-per-minute maximum, provision is made to apply full line voltage to the motor to obtain rated cable speed at 250 fpm. The pilot does not have variable speed control capabilities. Other switches on the control panel are the hoist speed mode, operators cable cut switch, and aircraft position switch. Also the elapsed time indicator is contained in the control panel to register winch motor hours only.

14-193. Removal — Control Panel. a. Disconnect boom head cable connector (35, figure 14-16).

b. Disconnect pendant control cable connector (36).

c. Disconnect boom motor cable connector (37).

d. Disconnect limit switch cable connector (10).

e. Disconnect winch motor cable connector (31).

f. Remove input cable (38).

g. Remove clamps (66) and duct (67).

h. Remove two bolts (41) and washers (42).

i. Loosen four screws (51) until flush with inserts.

j. Remove two bolts (39) and washers (40).

k. Remove control panel assembly (5).

14-194. Inspection — Control Panel. a. Inspect control panel and mounting angles for corrosion, dents, scratches, cracks, loose or missing hardware and security.

b. Inspect switches and receptacles on control panel for security, damage and condition.

14-195. Repair Control Panel. Repair of control panel consists of replacing light bulb, boots, and blower assembly fan. (Figure 14-19, sheet 3 of 4).

a. Disassemble control panel as directed in order to remove and replace blower assembly fan (figure 14-19, sheet 3 of 4).

NOTE

Remove all wiring and/or electrical connectors by unsoldering wire (1) and cutting wire (2) and (3) one inch from the terminal leaving enough wire to show the color of the wire for identifying the proper lead from the new motor. Remove old terminals (2) and (3) after crimping a terminal on the two new wires.

NOTE

It is recommended that the attaching parts (nuts, screws, washers) be kept with each component for reuse at assembly.

b. Remove cover assembly (13) by removing screws (14) from cover assembly.

c. Remove logic side cover assembly (17) by removing screws (15) from cover assembly.

d. Carefully pull apart the two side covers so that the three electrical connections (1), (2) (red wire), and (3) (black wire) can be disconnected.

e. Remove plenum (8) by removing screws (7).

f. Remove fan motor mounting screws (4). Remove fan motor from chasis (18). Remove brackets (5) and (9) by removing screws (4).

g. Reassemble in reverse order.

14-196. Installation — Control Panel. a. Install control panel with two bolts (39) and washers (40).

b. Install two bolts (41) and washers (42).

c. Tighten screws (51).

d. Install air duct (67) and clamps (66).

e. Install input cable (38).

f. Connect winch motor cable connector (31).

g. Connect limit switch cable connector (10).

h. Connect limit boom motor connector (37).

i. Connect pendant control cable connector (36).

j. Connect boom head cable connector (35).

k. Perform operational check of hoist system, refer to paragraph 14-155.

14-197. BOOM POSITION ACTUATOR AND STRUCTURE SUPPORT.

14-198. Description — Boom Position Actuator and Structure Support (figure 14-27). The boom position actuator is a rotary actuator with a maximum operating load of 8500 inch-pounds. Circuitry protection prevents operation when the maximum operating load is exceeded. The structural support assembly consists of an upper and lower stanchion assembly, and post assembly.

14-199. Removal — Boom Position Actuator and Structure Support.

a. Remove high performance hoist assembly from aircraft. Refer to paragraph 14-149.

b. Remove control panel assembly, refer to paragraph 14-191.

c. During removal of the upper support assembly (21) lay winch assembly and boom head on workbench. Remove bolts (22, figure 14-16), washers (24), carrying handles (24.1), sleeve spacers (26), bracket assembly (25), and upper support assembly (21).

d. Remove boom head assembly, refer to paragraph 14-158.

e. During removal of the lower support assembly (34), lay winch assembly and boom head on workbench. Remove four bolts (32) and washers (33).

NOTE

Make sure electrical cables are disconnected and tied off to prevent interference during removal of winch assembly.

f. Remove winch assembly (27).

14-200. Disassembly — Boom Position Actuator and Structure Support Assembly (AVIM). Refer to figure 14-27.

a. Remove reaction arm assembly (9) from reaction plate (52), by removing quick release pin (30).

b. Remove height adjuster assembly (1) from upper support assembly (3). Remove plunger (4) by loosening set screw (26).

c. Disassembly of height adjuster assembly (1). Remove retaining ring (20), remove ceiling adapter (23), remove retaining rings (19 and 22), and press out bearings (18 and 21) if required.

d. Remove four screws (16) and cover (15) from upper support assembly (3).

WARNING

Do not disassemble the reaction arm any further than step e. Otherwise, damage and personal injury could result.

e. Disassembly of reaction arm assembly (9). Remove roll pin (27) and slide extension arm (28) off pivot arm (55). Remove extension cap (29), remove stud (56), remove roll pin (57), remove quick disconnect adapter (32), and remove extension lanyard.

f. Remove stanchion plate (6) from stanchion tube assembly (43). Remove grommet (5) from cover plate (6).

g. If required, remove bolt (13) and pendant hook (14).

h. If required, remove socket cap screws (10), retainer hook (11), and retaining clip (12) from stanchion tube assembly (43).

i. If required, loosen nut (7) and remove stud (8) from stanchion tube assembly (43).

j. Remove two screws (40) from switch cover assembly (41). Remove anti scuff ring (39) and slide switch cover (41) up to gain access to microswitches.

k. Remove nuts (60), quick release pins (31) and heel plate (61). Remove quick release pin (30). Remove screws (58), washers (59), and overload bracket (48).

NOTE

Before removing lower base plate (33), ensure that the timing marks are on both the base plate (33) and rotary actuator (45). Ensure that a timing mark is on the upper base plate (51) after removing base plate (33) and reaction plate (52). If timing marks are not on either of the parts, mark them as required.

l. Remove cotter pin (53), quick disconnect (32), and thrust washer (54).

m. Remove lower base plate (33), reaction plate (52) and switch lever assembly (29). Remove screws (64), upper base plate (51), screws (63), and remove mounting flange (65) from support assembly (66).

n. Remove six bolts (42) from stanchion tube assembly (43).

NOTE

While pulling assemblies out of stanchion tube (43), rotate slightly to aid in disassembly.

o. Remove rotary actuator (45), mechanical stop (44), and inertia dump assembly (36) and motor (37) from stanchion tube assembly (43).

p. Before completely removing these assemblies, back each assembly out one inch from stanchion tube (43), insert bolt (42) into one of the six holes and screw approximately halfway with rotary actuator assembly (53). This stop screw will prevent the rotary actuator assembly from coming apart.

q. Remove nuts (35), screws (38), and motor (37) from inertia dump assembly (36).

14-201. Inspection, Disassembled — Boom Position Actuator and Structure Support (AVIM).

a. Inspect for corrosion, dents, scratches, cracks, loose and missing hardware and security.

b. Inspect switches and receptacles for security, damage and general condition.

14-202. Repair and Replacement — Boom Position Actuator. a. Repair of the boom position actuator consists of replacing the boom position actuator and structure support assembly.

b. Replace all parts with excessive corrosion, dents, scratches and cracks.

14-203. Assembly — Boom Position Actuator and Structure Support (AVIM). Refer to figure 14-27.

a. Install motor (37) on inertia dump assembly (36), screws (38), and nuts (35).

b. Install rotary actuator (45), mechanical stop (44), inertia dump assembly (36), and motor (37) into stanchion tube assembly (43) and rotate assemblies 30 degrees to right or left to complete installation in stanchion tube assembly.

c. Install six bolts (42) in stanchion tube assembly (43) and lock wire bolts with .020 safety wire.

d. Install mounting flange (65) on upper base plate (51) using screws (63). Install upper base plate (51) and mounting flange (65) on rotary actuator (45) and screws (64). Install reaction plate (52) with switch lever assembly (29) and lower base plate (33).

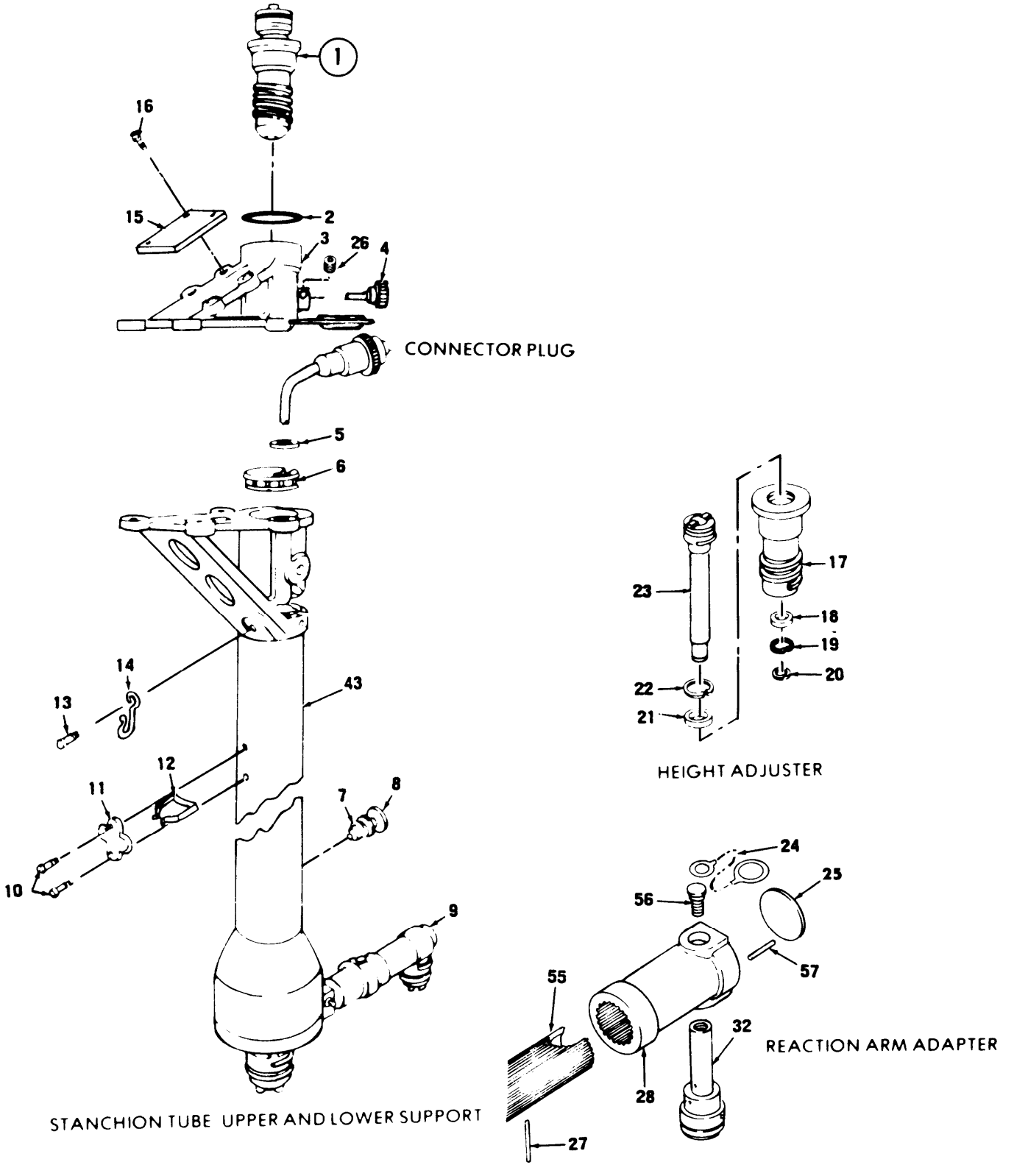

Figure 14-27. Boom Position Actuator and Structure Support (Sheet 1 of 3)

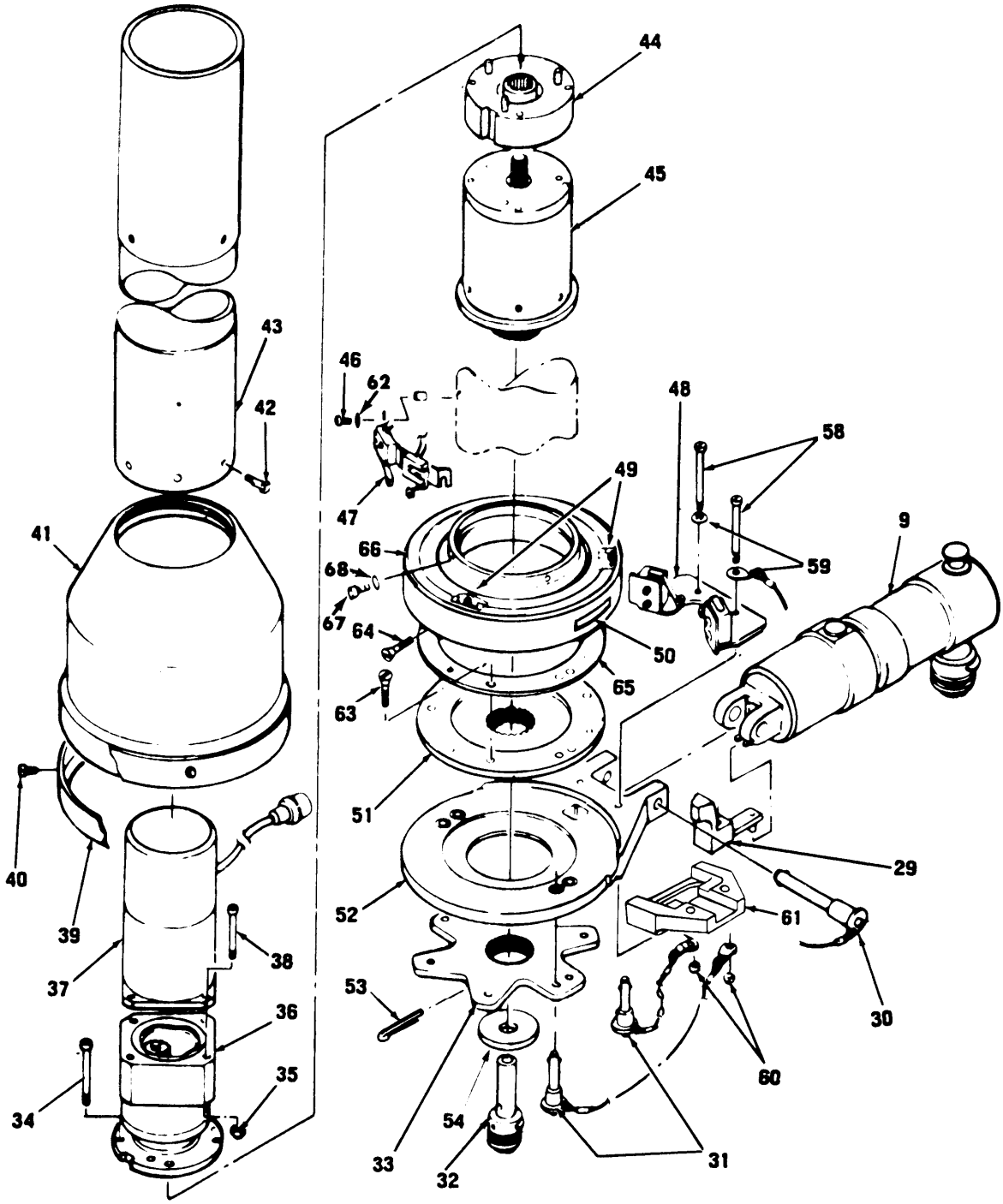

Figure 14-27. Boom Position Actuator and Structure Support (Sheet 2 of 3)

1. Height Adjuster
2 Packing
3. Upper Support Assembly
4. Quick Plunger
5. Nonmetallic Grommet
6. Stanchion Plate
7. Nut
8. Stud
9. Reaction Arm Assembly
10. Socket Cap Screw
11. Retainer Hook
12. Retaining Clip
13. Bolt
14. Pendant Hook
15. Cover Plate
16. Screw
17. Shaft
18. Bearing
19. Retaining Ring
20. Retaining Ring
21. Bearing
22. Retaining Ring
23. Ceiling Adapter
24. Extension Lanyard
25. Extension Cap
26. Setscrew
27. Roll Pin
28. Extension Arm
29. Switch Lever Assembly
30. Quick Release Pin
31. Quick Release Pin
32. Adapter
33. Base Plate (Lower)
34. Screw
35. Nut
36. Inertia Dump Assembly
37. Motor
38. Screw
39. Anti Scuff Ring
40. Socket Cap Screw
41. Switch Cover
42. Bolt
43. Stanchion Tube Assembly
44. Mechanical Stop
45. Rotary Actuator
46. Socket Cap Screws
47. Switches and Adapters
48. Overload Bracket and Switches
49. Control Cams
50. Terminal Strip Cover
51. Base Plate (Upper)
52. Reaction Plate
53. Cotter Pin
54. Washer Thrust
55. Pivot Arm
56. Stud
57 Roll Pin
58. Screw
59. Washer
60. Nut
61. Heel plate
62. Washer
63. Screw
44. Screw
65. Mount Flange
66. Support Assembly
67. Socket Cap Screw
68. Washer

Figure 14-27. Boom Position Actuator and Structure Support (Sheet 3 of 3)

NOTE

During installation of the upper and lower base plates, make sure the timing marks are aligned with shaft of rotary actuator.

e. Install thrust washer (54) with beveled edge down on quick disconnect (32). Install quick disconnect in rotary actuator (45). Align holes and install cotter pin (53).

f. Install overload bracket (48), quick release pin (30), screws (58) and washers (59) on top side of reaction plate assembly (52). Install heel plate (61), quick release pins (31) and nuts (60).

g. Slide switch cover (41) down Install anti scuff ring (39) and screws (40).

NOTE

Refer to paragraph 14-248 for adjustment of Limit Switches.

h. Install grommet (5) on stanchion plate (6) and install stanchion plate (6) into stanchion tube (43).

i. Assemble height adjuster per steps below:

(1) Press bearing (21) into top of shaft (17) housing and secure with retaining ring (22).

(2) Press bearing (18) into lower end of shaft (17) housing and secure with retaining ring (19).

(3) Install ceiling adapter (23) in shaft (17) housing and secure with retaining ring (20).

(4) Install packing (2) and assembled height adjuster (1) in upper support assembly (3).

j. Install plunger (4) and set screw (26) in upper support assembly (3). Install cover plate (15) with four screws (16).

k. Adjustment of plunger (4):

(1) Loosen set screw (26) in upper support assembly (3).

(2) With plunger (4) in the locked position turn plunger clockwise or counterclockwise to obtain locking if the height adjuster groves.

(3) Pull Plunger (4) and and turn 90° clockwise or counterclockwise to obtain releasing of plunger from height adjuster. If plunger does not release, repeat steps 1 and 2.

(4) Tighten set screw (26) in upper support assembly (3).

l. If removed, install pendant hook (14) and bolt (13).

m. If removed, install retaining clip (12), retainer hook (11), and socket cap screws (10) on stanchion tube assembly (43).

n. If removed, install stud (8) and screw in until approximately 1/2" from stanchion tube assembly (43) and tighten nut (7).

14-204. Installation - Boom Position Actuator and Structure Support a. Install winch assembly (27) on support assembly with four bolts (32, figure 14-16) and washers (33). Torque bolts (32) **160 to 190** inch-pounds.

b. Install upper support assembly (21)

c. Install boom head assembly, refer to paragraph 14-158.

d. Install sleeve spacers (26), handles (24.1), bracket assembly (25) and bolts (22)

e. Install control panel, refer to paragraph 14-191

14-205. WINCH ASSEMBLY.

14-206. Description — Winch Assembly. The winch assembly consists of a cable, cable drum gear driven by an electric motor, an automatic brake, oil pump, limit switch drive assembly and a level wind mechanism. The winch also has three temperature sensing switches that actuate when the item most critical to heat exceeds its operational limits.

NOTE

High performance hoist must be removed from helicopter to remove winch assembly.

14-207. Removal - Winch Assembly. a. Remove high performance hoist from helicopter, refer to paragraph 14-149.

b. Remove boom head assembly, refer to paragraph 14-158

c. Remove boom position actuator and structure support assembly. Refer to paragraph 14-197

14-208. Disassembly - Winch Assembly (AVIM). Refer to figure 14-28

a. Remove chain guard (13) by removing two screws (11) and washers (12). Remove roller chain (14) master link and remove chain. If required, remove retaining ring (15), sprocket (17) and machine key (16).

b. Remove limit drive assembly (10) by removing three bolts (35) and washers (34).

NOTE

Keep inertia dump assembly (1) and winch motor (4) together as a unit.

c. Remove clamp coupling (3) and winch motor (4) away from motor adapter assembly.

d. Remove bolt (6) and air duct (5).

NOTE

Oil transfer tube (45) will remain with pump housing (43). When pump housing is separated. Packings must be replaced before reinstallation.

e. Remove pump housing (43) by removing four bolts (9) and washers (8). Slide pump away from housing assembly. Remove tube (45) and discard packing (44)

f. Remove brake assembly (7) from winch housing if required, Refer to paragraph 14-221,

g. Remove bearings (37 and 42), ring spacers (38 and 41) and sprag clutch assembly (40) from brake disc cup (39). Remove shaft assembly (48), brake pump assembly (47) and bearing (46). Remove brake housing (50) if necessary to replace packings (49 and 51).

h. Remove eight nuts (32), 10 screws (28 and 26) and 18 washers (27 and 33). Remove cable drum assembly (31) and cover assembly (30) as a unit by carefully sliding unit from housing assembly (36).

NOTE

Do the following step only to remove a damaged cable.

i. Remove three screws (20), washers (21), and remove retaining plate (22). Remove round plain nut (18) and washer (19).

j. If required, remove thermal switch (54) from gearbox cover assembly (6).

14-209. Inspection - Winch Assembly. a. Inspect winch assembly for corrosion, dents, scratches, cracks, loose and missing hardware, and security of parts.

b. Inspect hoist cable for condition, refer to paragraph 14-166.

c. Inspect electrical wiring on winch for chafing, wear, and abrasion.

d. Inspect switches for damage, security, loose or missing hardware.

14-210. Repair - Winch Assembly. a. Replace damaged hardware.

b. Replace or repair damaged or malfunctioning components, refer to appropriate paragraph.

14-211. Assembly - Winch Assembly (AVIM). Refer to figure 14-28.

a. Install cover assembly (30) and cable drum assembly (31) as a unit by carefully sliding the assemblies into the housing assembly (36), while aligning splines of shaft of drum assembly (31) and gear inside housing (36). Install washers (27 and 33), screws (28 and 26) and nuts (32).

b. If removed, install bearing (46) onto brake pump assembly (47) and install pump assembly into bore of pump housing (43). Determine operation of brake pump reversing action, by rotating brake pump in each direction and observing brake pump rotation. Reverse action should occur within two revolutions.

c. If removed, install one bearing (42) onto shaft assembly (48) and Install shaft assembly onto dowel pins on face of brake housing (50).

d. If removed, install one ring spacer (41) against bearing (42) Installed on shaft assembly (48) and install sprag clutch assembly (40) onto shaft (48) with sprag cage flange against installed spacer (41). Align each sprag with mating slots on sprag shaft assembly.

e. Rotate brake disc cup (39) counterclockwise and align sprags to allow cup to slide into place, taking care not to force the sprags. Tap cup (39) into place in brake housing (50). Check that cup (39) rotates freely counterclockwise, and does not rotate in clockwise direction (viewed from shaft end). Install spacer (38) and bearing (37) into tang side of cup.

f. Install packings (44), oil transfer tube (45) into pump housing assembly (43).

g. Install packings (51 and 49) onto brake housing (50). Install brake housing (50) and shaft assembly (48).

NOTE

Make sure dowel pins inside pump housing (43) line up with cutout portion of the flange on brake pump (47) between stops.

h. Install brake assembly (7), refer to paragraph 14-221. Install brake housing (50), brake pump (47) and pump housing (43) into housing assembly (36). Make sure splined end of brake assembly meshes with gear shaft assembly. Secure with bolts (9) and washers (8).

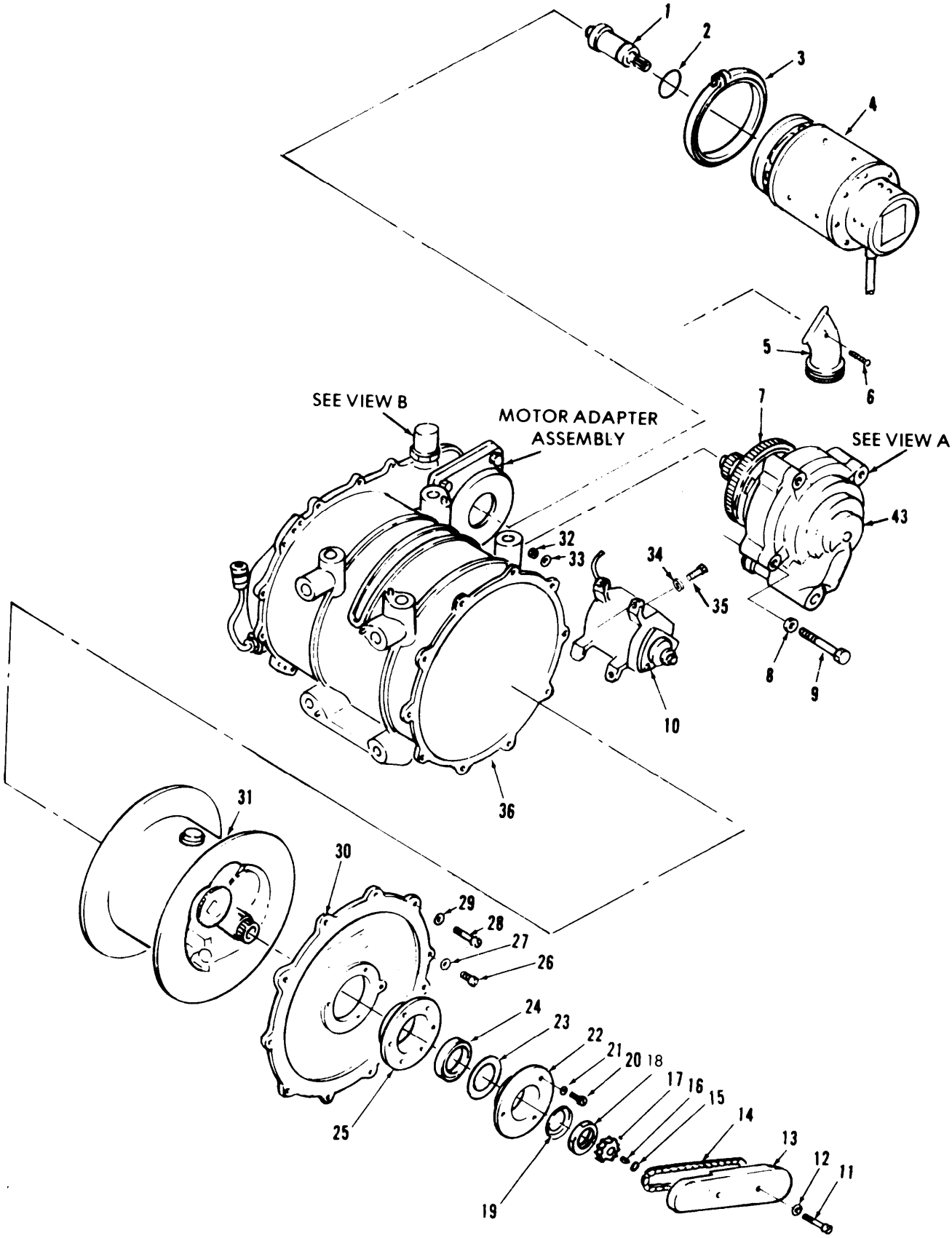

Figure 14-28. Winch Assembly (Sheet 1 of 2)

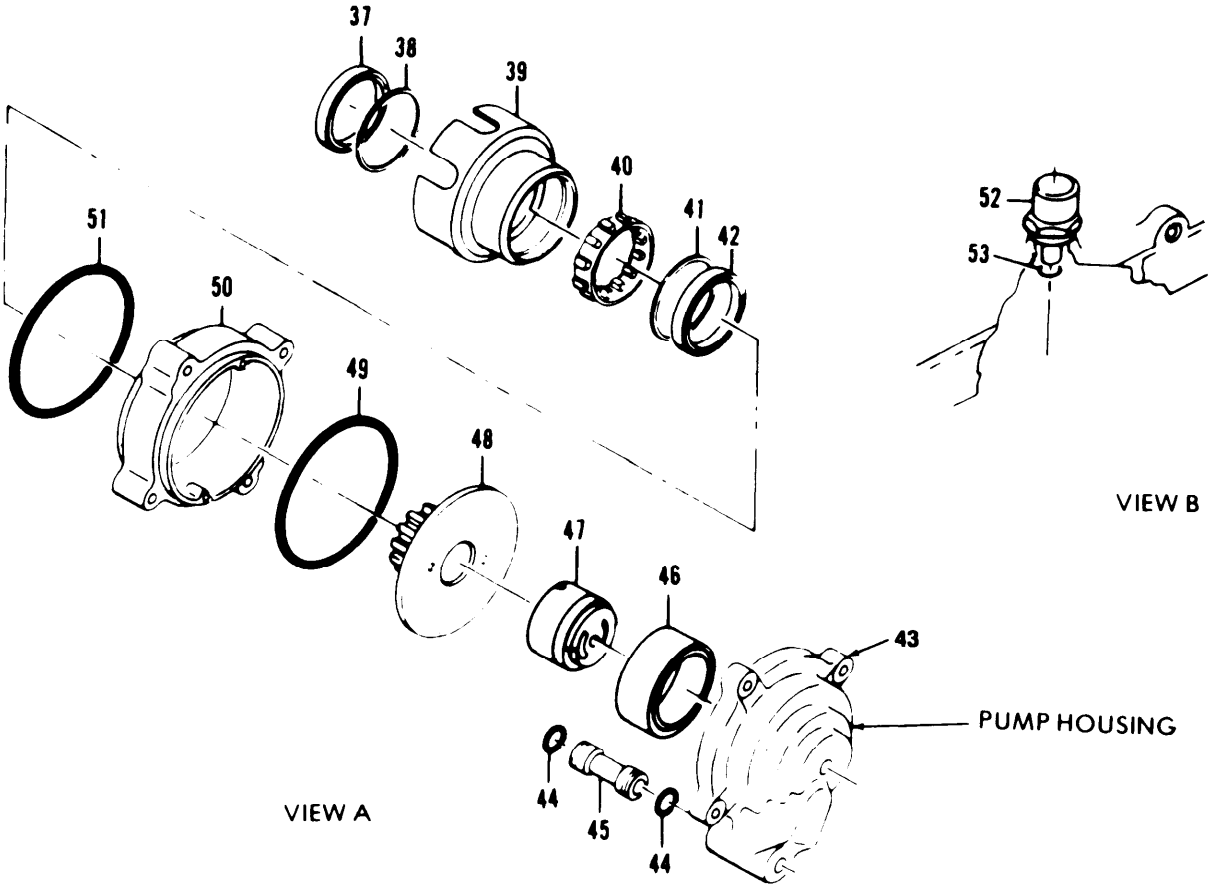

1. Inertia Dump Assembly
2. Packing
3. Clamp Coupling
4. Winch Motor
5. Air Duct Adapter
6. Bolt
7. Brake Assembly
8. Flat Washer
9. Shear Bolt
10. Limit Drive Assembly
11. Screw
12. Washer
13. Chain Guard
14. Roller Chain
15. Retaining Ring
16. Machine Key
17. Wheel Sprocket
18. Nut Spanner
19. Key Washer
20. Screws (Lockwire—C155)
21. Flat washer
22. Retaining Plate
23. Shim
24. Bearing
25. Spur Gear
26. Screw
27. Washer
28. Screw
29. Washer
30. Cover Assembly
31. Cable Drum Assembly
32. Nut
33. Washer
34. Washer
35. Bolt
36. Housing Assembly
37. Bearing
38. Ring Spacer
39. Disc Wake Cup
40. Sprag Clutch Assembly
41. Ring Spacer
42. Bearing
43. Pump Housing
44. Packing
45. Oil Transfer Tube
46. Bearing
47. Pump Assembly
48. Shaft Assembly
49. Packing
50. Brake Housing
51. Packing
52. Breather Assembly
53. Packing
54. Thermal Switch Connector

Figure 14-28. Assembly (Sheet 2 of 2)

i. Make sure inertia dump assembly (1) is positioned correctly in splined end of winch motor (4), and install. Secure with clamp coupling (3).

j. Install limit drive assembly (10). Refer to paragraph 14-213.

k. Install bolt (6) in air duct (5).

l. If removed, install machine key (16) and sprocket (17) on adapter. Secure with retaining ring (15). Position chain (14) on sprockets. Install master link and install cover (13) with screws (11) and washers (12).

m. If removed install thermal switch (54) in gear box cover assembly (6).

14-212. Installation — Winch Assembly. a. Install winch assembly (27, figure 14-16) on lower stanchion (34) with four bolts (32) and washers (33). Torque bolts (32) **160 to 190** inch-pounds.

b. Connect winch motor cable electrical connector (31) to control panel (5).

c. Install boom head assembly (47), refer to paragraph 14-158.

d. Install hook assembly (8), refer to paragraph 14-184.

e. Install cable assembly (84), refer to paragraph 14-166.

f. Install boom position actuator and structure support assembly (34), refer to paragraph 14-197.

14-213. LIMIT SWITCH DRIVE ASSEMBLY.

ASSEMBLY.

14-214. Description — Limit Switch Drive Assembly. The limit switch drive assembly operates the four limit switches which prevent unreeling the cable beyond established limits. The number one limit switch is a safety switch that opens when 3 wraps of cable are left on the cable drum. Number two limit switch limits down stop (5 wraps left on cable drum). Number three switch has three functions: (1) turns pendant caution light ON when hook is within 10 feet of the boom head; (2) limits cable speed to 75 feet-per-minute (fpm) when the hook is within 10 feet of the boom head; and (3) limits cable speed to 75 fpm when cable is within 10 feet of the all-out position. Number four switch limits cable speed to 20 fpm when hook is 12 to 18 inches from boom head. The limit switch drive is operated through the winch gears by a chain drive from the winch motor.

14-215. Removal — Limit Switch Drive Assembly. a. Disconnect limit switch cable connector (10, figure 14-16) from control panel.

b. Remove two screws (59), washers (60) and chain guard cover (61).

c. Locate and mark chain and sprockets to prevent loss of timing. Remove chain master link and remove chain (62).

d. Tape switch assembly sprocket to prevent rotation and subsequent loss of timing.

e. Remove three screws (63) and washers (64).

f. Remove limit switch drive assembly (76).

14-216. Disassembly — Limit Switch Drive Assembly (AVIM). Refer to figure 14-29.

a. Remove limit switch cover (14) by removing socket cap screws (13) and flat washers (12).

NOTE

If micro switch (9) requires replacement, wire bundle must be loosened so that wires can be taken out of connector and pulled through and replaced.

b. Loosen clamp (5) and clamp (27) by removing nut (24), washer (6), screw (7) and terminal lug (23).

c. Remove override switch (25) by removing cap nut (22), nut (26) and washer (21).

d. Remove four socket cap screws (15), flat washers (16 and 18) and helical springs (17). Remove nut (1), washer (2) and shoulder bolt (4). Carefully slide switches (9) out of housing assembly (3). set sleeve spacers (19) aside for reassembly.

e. Remove switch from bracket by removing screws (11) and nut plate (28). If switch must be replaced, remove switch adapter (10).

f. If plug connector is damaged, remove by loosening plug saddles, sliding plug body down and pushing pins out of plug.

14-217. Inspection — Limit Switch Drive Assembly. a. Inspect limit switch drive for damage, corrosion, and loose hardware.

b. Inspect electrical wiring for damage, fraying, and condition.

c. Inspect switches for condition and operation.

14-218. Repair - Limit Switch Drive Assembly. Limit switch drive assembly repair consists of replacement of limit and override switches and connector.

1. Nut
2. Washer
3. Housing Assembly
4. Shoulder Bolt
5. Clamp
6. Washer
7. Screw
8. Plug Connector
9. Micro Switch
10. Switch Adapter
11. Screw
12. Washer
13. Socket Cap Screw
14. Limit Switch Cover
15. Socket Cap Screw
16. Washer
17. Helical Spring
18. Washer
19. Sleeve Spacer
20. Switch Bracket

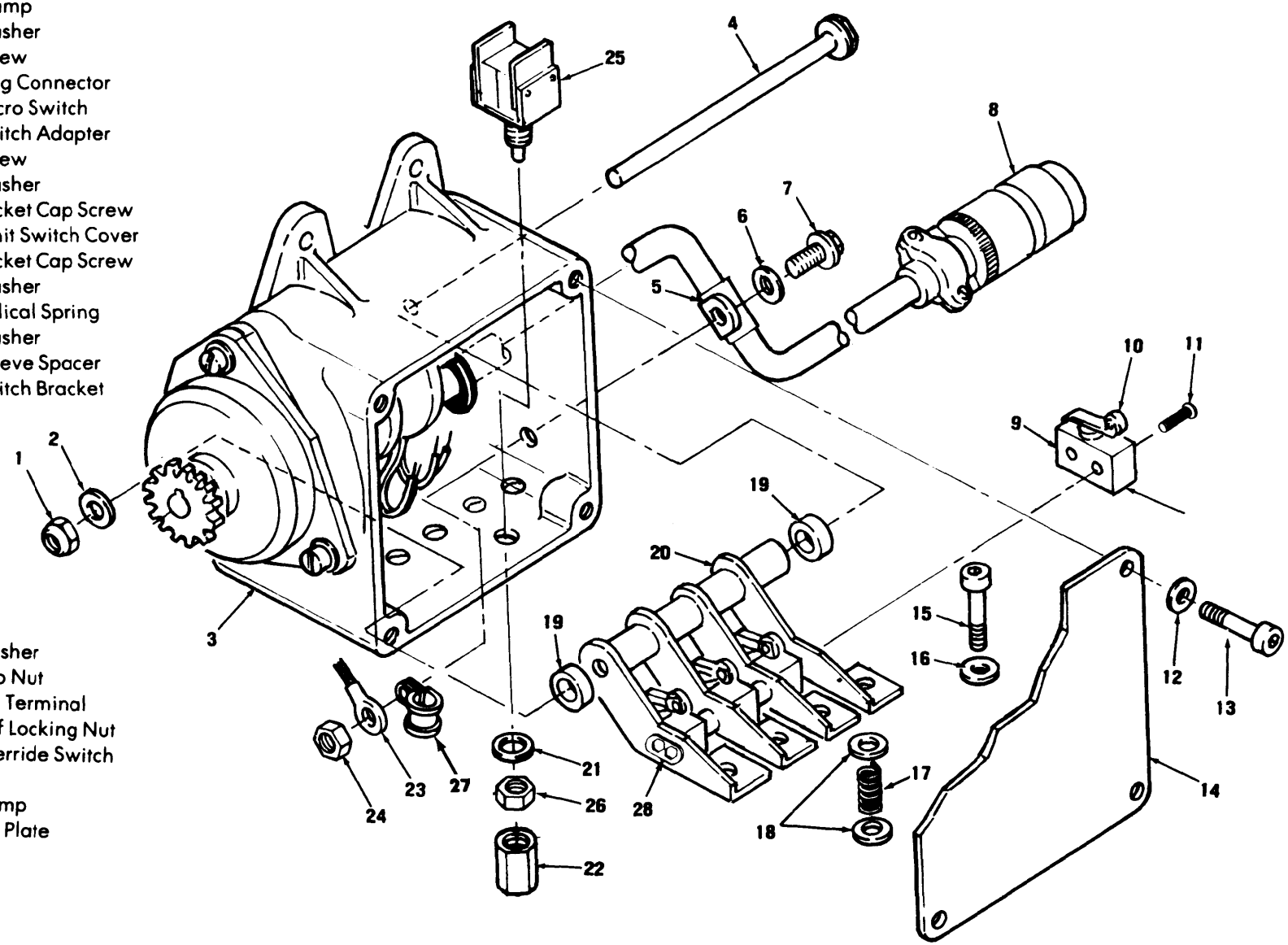

21. Washer
22. Cap Nut
23. Lug Terminal
24. Self Locking Nut
25. Override Switch
26. Nut
27. Clamp
28. Nut Plate

Figure 14-29. Limit Drive Assembly

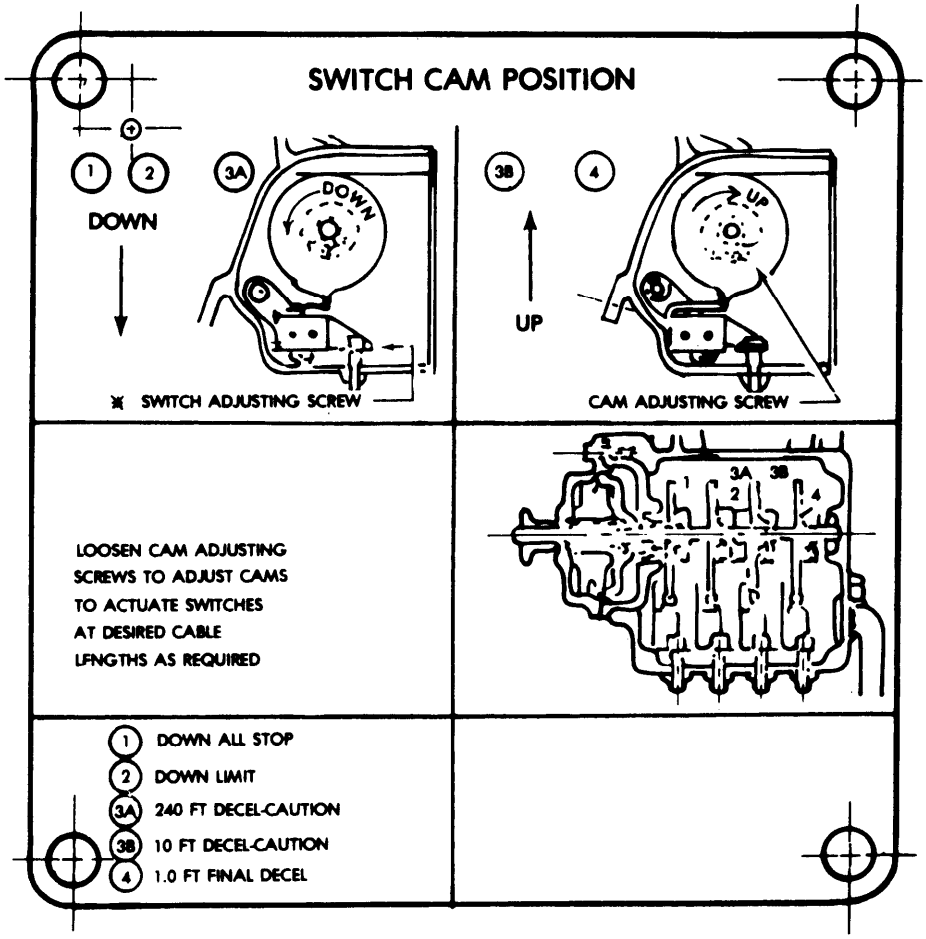

Figure 14-30. Instruction Cover Plate

14-219. Assembly — Limit Switch Drive Assembly (AVIM). Refer to Figure 14-29.

a. If micro switch (9) is being replaced, install switch adapter (10) on switch and install switch on switch brackets (20) with screws (11) and nut plate (28).

b. Align four switch brackets (20) and slide brackets into housing assembly (3) with sleeve spacer (19) on outside of brackets. Install shoulder bolt (4) through housing assembly (3), spacer (19), brackets (20), and spacer (19) on opposite side of housing. Secure bolt with washer (2) and nut (1).

c. Replace grommet if torn or deteriorated. Slide wire bundle through grommet, making sure bundle does not interfere with clamp movement. Position clamp (5) on wire bundle, and install screw (7) and washer (6) through clamp (5) on housing (3). Install terminal lug (23) on screw (7) making sure lug is electrically bonded to housing, and install clamp (27) and nut (24).

d. Install washers (18) and helical spring (17) between each switch bracket (20) and housing (3). Install socket cap screw (15) through washer (16), brackets (20), washers (18) and springs (17), and into staked nut on bottom of housing.

e. Install override switch (25) through housing (3) and secure with washer (21), nut (26) and cap nut (22).

f. Install plug connector (8).

g. Install limit switch cover (14) with socket cap screws (13) and washers (12).

14-220. Installation — Limit Switch Drive Assembly. a. Install limit switch drive assembly (76, figure 14-16) on winch assembly (27) and secure with three screws (63) and washer (64).

b. Install chain (62) and install master link in chain.

c. Install chain guard (61) with two screws (59) and washers (60).

d. Adjust limit switch cams, refer to paragraph 14-230.

14-221. AUTOMATIC BRAKE ASSEMBLY.

14-222. Description — Automatic Brake Assembly. The automatic brake assembly (7, figure 14-28) stops the cable when power is removed from the winch drive motor and drives the oil pump (47) through a shaft.

NOTE

Automatic brake assembly may be removed with high performance hoist installed in aircraft.

14-223. Removal — Automatic Brake Assembly (AVIM). a. Remove limit switch drive assembly, refer to paragraph 14-213.

b. Loosen bottom clamp (66, figure 14-16), remove bolt (79), air duct boot (67) and air duct adapter (80).

c. Relieve cable tension on automatic brake by reeling cable OUT a few inches.

d. Remove four bolts (65).

e. Remove pump housing assembly (77) with pump.

f. Pull automatic brake assembly (78) from winch housing.

g. Remove shaft (70) with backup rings (68), packing (69), spacers (71 and 73), and spring (72) from brake assembly (78).

14-224. Inspection — Automatic Brake Assembly. a. Inspect parts for damage, corrosion or condition.

b. Inspect pump housing assembly (77) for corrosion, cracks, or visible damage.

14-225. Repair — Automatic Brake Assembly (AVIM). Replace damaged or malfunctioning automatic brake assembly.

14-226. Installation — Automatic Brake Assembly (AVIM). a. Install spring (72), spacers (71 and 73), two new packings (69), and two back-up rings (68), on shaft (70).

b. Install brake assembly (78) in winch housing.

c. Install shaft (70) in brake assembly (78).

d. Position pump housing assembly (77) on winch assembly and install four bolts (65).

e. Install air duct boot (67), air duct adapter (80) with clamps (66) and bolt (79).

f. Install limit switch drive assembly (76), refer to paragraph 14-213.

14-227. DELETED.

14-228. Deleted.

14-229. Deleted.

14-230. LIMIT SWITCH DRIVE ASSEMBLY ADJUSTMENT.

14-231. Down All Stop Cam.

14-232. Description — Down All Stop Cam. The down all stop cam operates the down all limit switch to prevent unreeling the cable beyond prescribed limits.

WARNING

Do not rely on limit switch functions when operating hoist to make adjustments.

14-233. Adjustment — Down All Stop Cam.

a. Remove limit switch drive assembly cover plate (14, figure 14-29).

b. Reel out hoist cable until three wraps of cable remain on cable drum. Use OVERRIDE switch if winch motor stops.

c. Loosen switch No. 1 cam adjusting screw.

d. Rotate cam in DOWN direction (as shown on instruction plate) until switch 1 is heard to actuate on high section of cam.

e. Tighten cam adjusting screw.

f. Perform operational check, refer to paragraph 14-155.

g. Install limit switch drive assembly (14) cover plate when switch adjustment is complete.

14-234. Description — Down Limit Cam. The down limit cam operates switches that prevents unreeling of the cable beyond established limits.

CAUTION

Protect hoist cable from damage and do not allow kinks or bends to occur. Feed reeled out cable onto improvised spool.

14-235. Adjustment — Down Limit Cam.

WARNING

Do not rely on limit switch functions when operating hoist to make adjustments.

a. Remove limit switch drive assembly cover plate (14, figure 14-29).

b. Reel out hoist cable until five wraps of cable remain on cable drum. Use OVERRIDE switch if winch motor stops.

c. Loosen switch 2 cam adjusting screw.

d. Rotate cam in DOWN direction (as shown on instruction plate) until switch is heard to actuate on high section of cam.

e. Tighten cam adjusting screw.

f. Reel in hoist cable.

g. Perform operational check, refer to paragraph 14-155.

h. Install limit switch drive assembly cover plate when switch adjustment is complete.

14-236. Down Deceleration Cam.

14-237. Description — Down Deceleration Cam. The down deceleration cam controls cable speed reduction to a maximum of 75 fpm for the last 10 feet of cable during reel out.

14-238. Adjustment — Down Deceleration Cam.

WARNING

Do not rely on limit switch functions when operating hoist to make adjustment.

a. Remove limit switch drive assembly cover plate (14, figure 14-29).

b. Reel out cable until winch stops (down limit switch actuated).

c. Measure ten feet of cable from boom head and mark cable at that point.

d. Reel in cable until mark for step c is at boom head.

NOTE

Do not disturb up deceleration side of cam when making the following adjustment.

e. Loosen switch 3 down-deceleration cam adjusting screw 3A.

f. Rotate cam in DOWN direction (as shown on instruction plate) until switch 3 is heard to actuate on high section of cam.

g. Tighten cam adjusting screw.

h. Perform operational check, refer to paragraph 14-155.

i. Install limit switch drive assembly cover plate when switch adjustment is completed.

14-239. Caution Light (10 Foot Limit) Cam.

14-240. Description — Caution Light (10 Foot Limit) Cam. Controls the pendant CAUTION light and 10 foot deceleration (75 fpm maximum cable speed).

14-241. Adjustment — UP DECELERATION and Caution Light (10 Foot Limit) Cam.

WARNING

Do not rely on limit switch functions when operating hoist to make adjustments.

a. Remove limit switch drive assembly cover plate (14, figure 14-29).

b. Operate winch until ten feet of cable is extended out from boom head (measured from top of hook assembly bumper).

NOTE

If winch motor stops, check settings of the DOWN and DOWN ALL stop limit switches.

c. If the control pendant CAUTION LIGHT is not illuminated, adjust switch 3 CAUTION LIGHT, Cam 3B to just actuate the switch, then tighten cam screw (figure 14-30).

d. Check the cam adjustment by reeling hoist cable out, then in; CAUTION LIGHT must illuminate when hook and bumper are within 10 feet of the full up position.

e. Tighten cam adjusting screw.

f. Perform operational check, refer to paragraph 14-155.

g. Install limit switch drive assembly cover plate when switch adjustment is complete.

14-242. UP — Deceleration (1 Foot Limit) Cam.

14-243. Description — Up Deceleration (1 Foot Limit) Cam. The up-deceleration cam controls the one foot limit (12 fpm maximum cable speed) during reel-in.

14-244. Adjustment — Up Deceleration (1 Foot Limit) Cam.

WARNING

Do not rely on limit switch functions when operating hoist to make adjustments.

a. Remove limit switch drive assembly cover plate (14, figure 14-29).

b. Operate winch until one foot of cable is extended from boom head (measure from top of hook assembly bumper).

NOTE

If winch motor stops check settings of DOWN and DOWN ALL stop limit switches.

c. Loosen switch 4 cam adjusting screw.

d. Rotate cam in UP direction (as shown on instruction plate) until switch 4 is heard to actuate on high section of cam.

e. Tighten cam adjusting screw.

f. Perform operational check, refer to paragraph 14-155.

g. Install limit switch drive assembly cover plate when cam adjustment is complete.

14-245. Up Limit Switches.

14-246. Description — Up Limit Switch. The up limit switch is actuated by the hook striker disc (3, figure 14-26) to shut off the winch motor.

14-246.1 Inspection — Up Limit Switch(es).

a. Inspect electrical wires for frayed, chafed or damaged wires.

b. Inspect switches and components for damage.

14-247. Adjustment — Up Limit Switch.

WARNING

Do not rely on limit switch functions when operating hoist to make adjustments.

Section II. CARGO SUSPENSION ASSEMBLY

14-260. CARGO SUSPENSION ASSEMBLY.

14-261. Description — Cargo Suspension Assembly. On Serial No. 62-12351 thru 72-21649, a suspension assembly for carrying external cargo loads hangs at approximate center of gravity from a structural cross beam under transmission pylon. Cargo release hook, on lower end of suspension assembly, extends through a padded opening in lower skin of fuselage. Hook unit is a horizontal loading type with an automatic pickup latch, and has both electrical and mechanical load release provisions. Cargo hook has a guard over its hand lever. The suspension has no swiveling action, being for use with a load connector which has a swivel or other device to relieve torsion effects due to a load twisting or turning. Cargo hook assembly is guarded by a bumper ring with nylon outer surface. Beginning with Serial No. 63-8739, suspension shaft is secured to lower yoke by a shear pin (instead of four bolts) and by a failsafe retaining collar, two washer-type thrust bearings, and a nut threaded and bonded into shaft end (figure 14-31). Cargo is released by use of a button, located on pilots control stick. The two position toggle switch (cargo release), located on overhead console, must be moved from OFF to ARM before pressing button. When the switch is in ARM position the amber light on the instrumental panel illuminates. The pilot may accomplish manual release of external cargo, regardless of the position of the ARM switch, by depression of a foot pedal, which is connected by a cable assembly to cargo hook release mechanism (figure 14-31).

14-262. Lubrication — Cargo Suspension Assembly. When cargo hook is in daily use, apply a small amount of grease (C129) each day to end of load beam (29, figure 14-32) where it engages latch; lubricate link (19) at suspension bracket (14), wipe off excess grease.

14-263. Operational Check — Cargo Suspension Assembly. a. Check that upper control cable (10, figure 14-32) and electrical cable (21) have enough slack to allow full swing of suspension assembly. Cables should not allow release of load beam (29) during swing text.

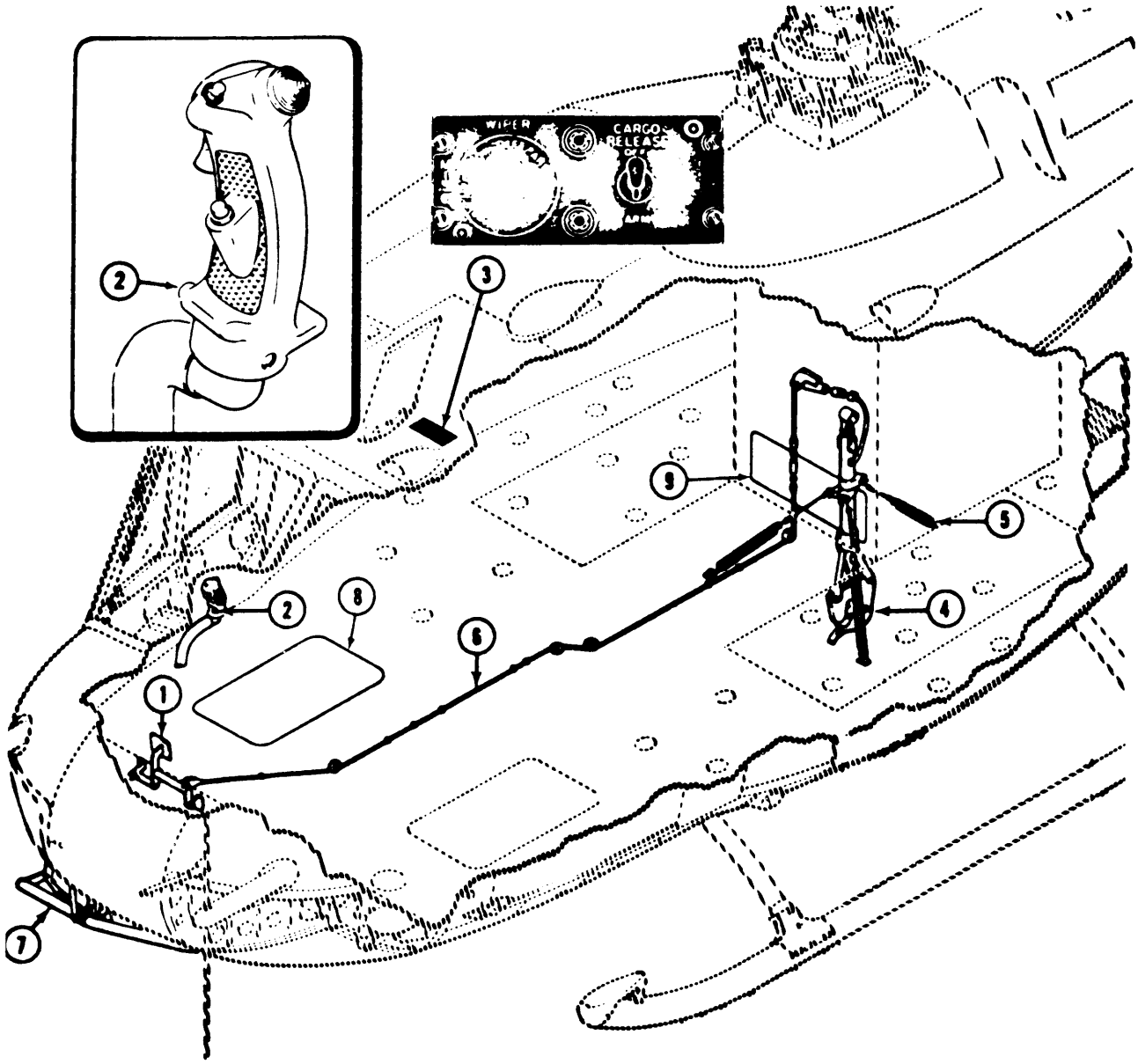

1. Manual cargo release pedal
2. External *cargo* electrical release switch
3. Cargo release off/arm switch -- miscellaneous panel
4. Cargo suspension assembly
5. Restraint springs (3)
6. Mechanical release cable assembly
7. Cargo rear view mirror
8. Floor access door
9. Pylon access door

Figure 14-31. Cargo Suspension System.

b Check operation of mechanical release system as follows:

(1) Ensure that cable lever (23) is approximately parallel to plane of bolts (26) retaining cargo hook (27),

(2) Attach a test load of 25 pounds to load beam (29).

(3) Press pedal (2) against stop (1) and check the following:

(a) Check that spring and spacer (8) in bracket (7) are not bottomed out internally.

(b) Check that cable lever (23) is up, but not in contact with conduit of upper control cable (10) just below clamp (25), and that load beam (29) released test load.

(c) Release pedal (2) and check that upper control cable (10) and cable lever (23) returns to locked position and that load beam (29) is latched.

c. If system fails any of the preceding checks, adjust cargo suspension (paragraph 14-269).

d. Check electrical operation of cargo hook, with minimum test load of **125** pounds suspended on load beam (29). Check for release with switch in ARM and release button on cyclic depressed. Check for retention with switch in OFF and release button on cyclic depressed (figure 14-31).

NOTE

Ensure that BAT SWITCH is positioned to ON, or external power source is connected. NON-ESSENTIAL BUS switch shall be set to MANUAL, and CARGO HOOK circuit breaker shall be closed.

14-264. Troubleshooting — Cargo Suspension Assembly. Troubleshooting the cargo suspension assembly in accordance with Table 14-3.

NOTE

Before you use this table, be sure you have performed all normal operational checks.

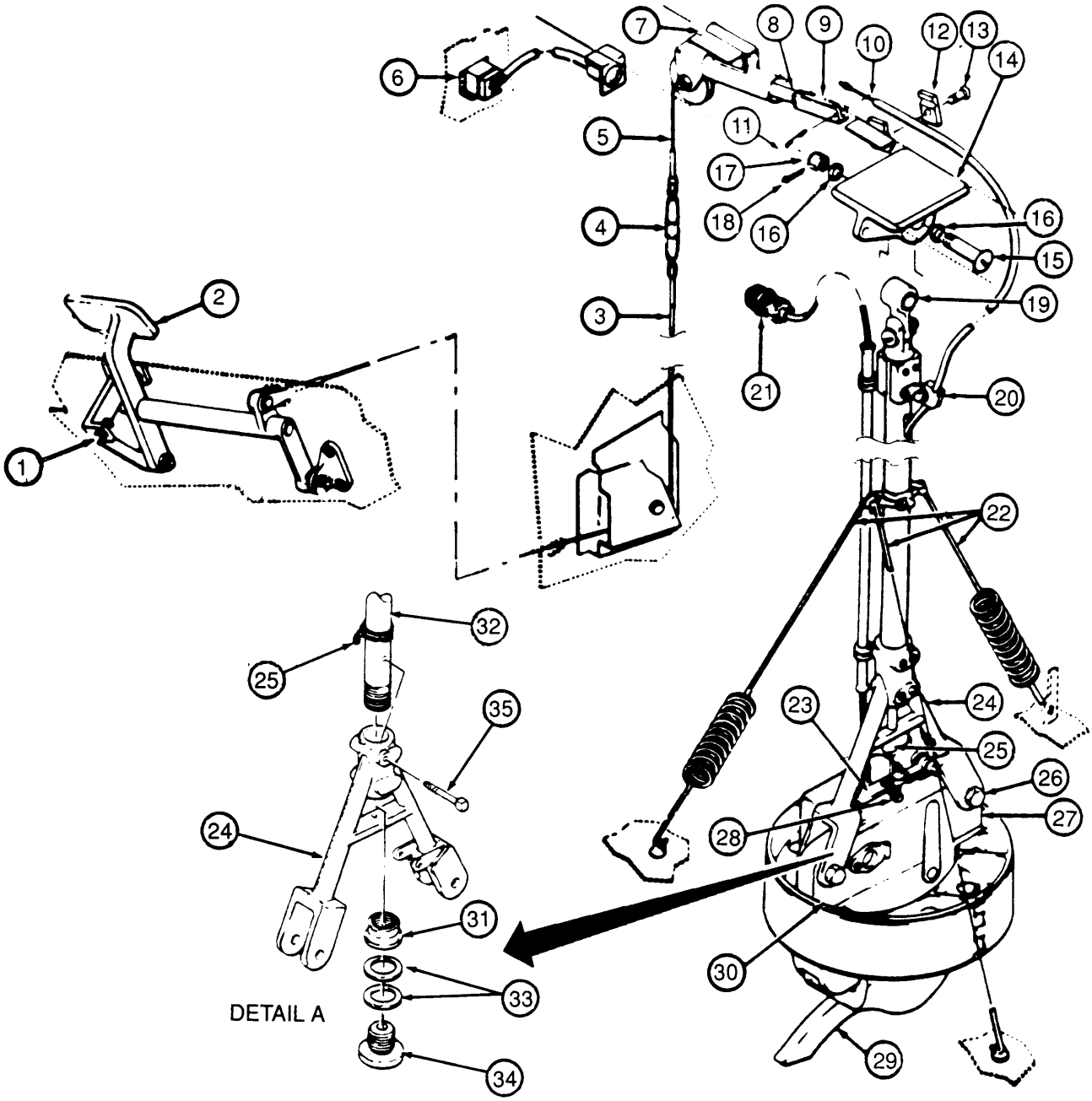

1. Stop
2. Pedal
3. Actuating cable
4. Turnbuckle
5. Actuating cable
6. Cargo release relay
7. Bracket
8. Spacer
9. Connector
10. Control cable
11. Cotter pin
12. Support clamp
13. Screw
14. Suspension bracket
15. Bolt
16. Washer
17. Nut
18. Cotter pin
19. Link
20. Clamp
21. Electrical cable
22. Restraint spring
23. Cable lever
24. Yoke
25. Clamp
26. Bolt
27. Cargo hook
28. Stop screw
29. Load beam
30. Bumper ring
31. Sleeve Spacer
32. Shaft
33. Washer
34. Machine threaded bushing
35. Pin

Figure 14-32. Cargo Suspension Installation — Typical

Table 14-3 Troubleshooting - Cargo Suspension Assembly

CONDITION

TEST OR INSPECTION

CORRECTIVE ACTION

1. Electrical cargo release inoperative.

STEP 1. Ensure that 28 Vdc is present at receptacle (1, figure 14-33) when CARGO RELEASE switch is depressed.

If 28 Vdc is not present, replace faulty solenoid (paragraph 9-5).

STEP 2. Depress CARGO RELEASE switch on pilots cyclic stick and check for 28 Vdc at receptacle.

If 28 Vdc is not present at receptacle with switch depressed, replace faulty switch (paragraph 9-5).

STEP 3. Depress CARGO RELEASE switch on co-pilots cyclic stick and check for 28 Vdc at receptacle.

If 28 Vdc is not present at receptacle with switch depressed, replace faulty switch (paragraph 9-5).

STEP 4. Depress CARGO RELEASE switch (pilots or co-pilots) and check for 28 Vdc at receptacle.

If 28 Vdc is not present, replace circuit breaker (chapter 9.)

STEP 5. Check wiring and electrical continuity.

Repair or replace defective wiring (paragraph 9-5 and Appendix F).

2. Mechanical cargo release malfunctioning.

STEP 1. Depress mechanical CARGO RELEASE pedal and check that cargo hook releases.

If cargo hook does not open, replace broken cable, damaged pulley, or secure cable connections (paragraph 14-267).

STEP 2. Depress mechanical CARGO RELEASE pedal and check that cargo hook releases.

If cargo hook does not release, adjust cable(s) (paragraph 14-269).

3. Cargo suspension assembly power failure.

Ensure that circuit breaker does not open when cargo suspension assembly is energized.

If circuit breaker opens, correct short in system, repair/replace defective wiring, or replace faulty circuit breaker (paragraph 9-12 and Appendix F).

I U.S. GOVERNMENT PRINTING OFFICE: 1993 765-023/30333

14-265. Removal — Cargo Suspension Assembly.

a. Remove pylon access door (9, figure 14-31) in cabin.

b. With electrical power off, disconnect electrical cable (21, figure 14-32) at receptacle located on right lower side of structural lift beam.

c. Detach upper control cable (10) from support clamp (12). Remove cotter pin and detach ball terminal of cable from connector (9).

d. Unhook and remove three restraint springs (22) from structure and suspension assembly.

e. Remove cotter pin (18), nut (17), washers (16), and bolt (15) to detach link (19) from suspension bracket (14). Remove suspension assembly.

14-266. Inspection — Cargo Suspension Assembly.

a. Inspect bolts (15 and 25), fittings (24 and 30) and restraint springs (22) for damage, wear and serviceability. Inspect link (19) and its bushing for damage and wear.

CAUTION

Wear of bolts, screws and pins in the cargo suspension assembly can change the rigging of the mechanical release; and, if they are sufficiently worn, an inadvertent release of external cargo can result. Wear of the hardware attaching the cargo suspension yoke to the cargo suspension shaft can be determined by removing two of the machine screws or the pin.

NOTE

Ensure clamp and eyebolt (6, figure 14-33) is installed 14.0 inches from center line of hole in link (2).

b. Inspect structural parts from main beam to the hook assembly for obvious maximum radial play of 0.003 inch. Inspect structural parts for dents, scratches, and corrosion not to exceed a maximum depth of **0.035** inches. Inspect link (19, figure 14-32) for maximum **0.020** inch radial play. Inspect yoke (24) for maximum **0.020** inch radial play with shear pin not installed. (Reference NOTE below). There shall be no space between yoke (24) and its support (bushing, bearing, and spacer) with the shear pin installed. Inspect shear pin for maximum looseness of **0.003** inch.

NOTE

If a maximum of 0.020 inch radial play in yoke (24) exists, items 32, 33, and 34 in figure 14-32 must be replaced. Item (34) threaded bushing is bonded with EA 934 (29). When installing item (34), threads of items (34) and (32) must be coated with (C29) and installed wet. Torque (34) 20-25 foot-pounds.

c. Check electrical operation. Check continuity of circuits (paragraph 9-12 and Appendix F).

14-267. Repair or Replacement — Cargo Suspension Assembly.

a. Replace any damaged or unserviceable attachment bolts, fittings, clamps, or restraint springs on suspension assembly as necessary.

b. On a suspension with fail-safe yoke attachment, replace shear pin as necessary in attachment of lower yoke to suspension shaft. Remove pin, align holes through yoke and shaft, insert new pin, and secure with cotter pin.

14-268. Installation — Cargo Suspension Assembly.

NOTE

Make sure rubber bumper is installed on edge of lower skin of fuselage (paragraph 14-286.d.).

a. Position suspension assembly with open side of load beam (29, figure 14-32) forward and with link (19) aligned in suspension bracket (14). Install bolt (15), washers (16), nut (17), and cotter pin (18). Link must operate freely.

NOTE

Ensure that spring (22) with least amount of coils (approximately 24) is installed in aft position. If amount of coils is the same, short spring will be installed aft.

b. Install and connect three restraint springs (22) between eyebolts on structure and clamps on suspension assembly.

c. Route free end of upper control cable (10) aft and to the right of suspension bracket (14). Engage ball terminal in connector (9) and secure with cotter pin (11). Attach cable conduit in support clamp (12) and secure with screw (13) to bracket.

d. Connect electrical cable (21) to receptacle located on lower right side of lift beam.

e. Adjust and check mechanical and electrical operation of suspension assembly (paragraph 14-269 and 14-263).

14-269. Adjustment - Cargo Suspension Assembly.

a. With pedal (2, figure 14-32) full aft and upper control cable (10) loose in support clamp (12) and clamps (20 and 25), adjust lower and upper actuating cables (3 and 5), at turnbuckle (4) to provide **20 TO 24** pounds cable tension. Safety turnbuckle with lockwire (C155).

b. Check at cargo hook (27) for correct positioning of parts with load beam (29) latched.

c. Adjust stop screw (13, figure 14-33) in cable lever (23) until screw holds lever approximately parallel to plane of bolts (21) in yoke (9). Secure screw with check nut. Check lower control cable (20, figure 14-33) in cargo hook (18) for required clearance.

(1) For hook assembly with lower control cable (20) extending inside case, open hinged access door on cover of hook and check that ball terminal of cable is **0.43 TO 0.50** below seat of internal level (19).

(2) For hook assembly with lower control cable (20, detail A and B) outside of case, check that ball terminal of cable is **0.12 TO 0.18** inch beyond seat of internal latch (19).

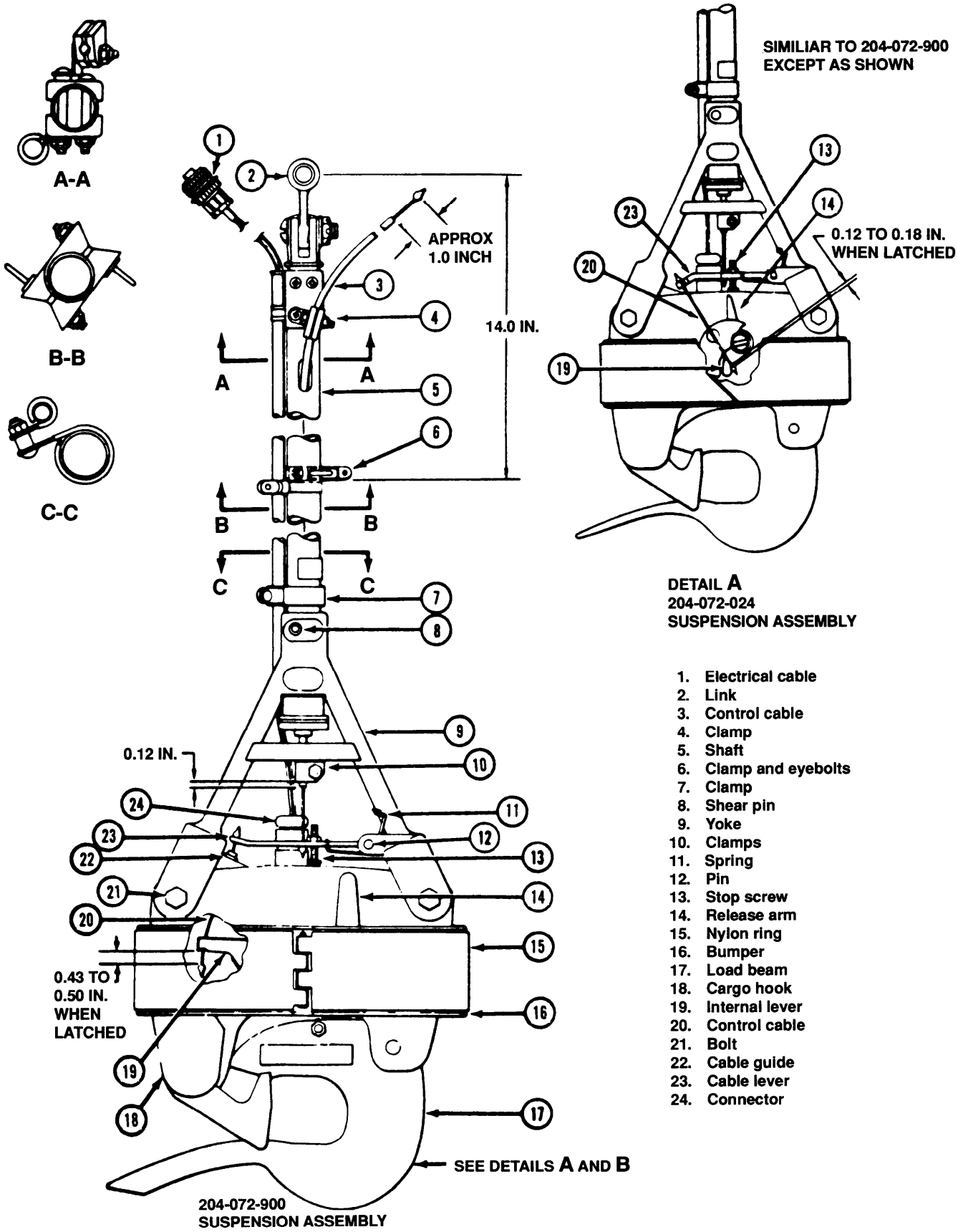

Figure 14-33. Caargo Suspension Assemblies

d. Adjust conduit of upper control cable (3) to provide approximately **1.0** inch clearance from upper ball terminal and secure with support clamp (12, figure 14-32). Set lower end of conduit **0.12 TO 0.18** inch below clamp (10, figure 14-33) and secure with damps (10 and 4).

e. Check that electrical and control cables have enough slack to allow full swing of suspension assembly. Cables should not release load beam (17) during swing test.

f. Check operation of mechanical release system as follows:

(1) Check to ensure that cable lever (23, figure 14-32) is approximately parallel to plane of bolts (26).

(2) Attach a test load of 20 pounds to load beam (29),

(3) Press pedal (2) against stop (1). Check that spacer (8) and spring in bracket (7) are not bottomed out; that cable lever (23) is up but not stopped by conduit of upper control cable (10), and that load beam (29) released test load. Cable lever should not bottom against bottom of cable conduit or damp. Adjust stop screw (28) as necessary.

(4) Release pedal (2) and check that cable returns to locking position and that load beam (29) is latched.

14-270. RELEASE CABLES.

14-271. Description - Release Cables. The mechanical release system of the cargo suspension assembly is connected by four cable assemblies: lower actuating cable (3, figure 14-32), upper actuating cable (5), upper control cable (10), and lower control cable (20, figure 14-33). The actuating cables are routed through pulleys and fairleads down inside right wall of pylon support structure and forward under cabin floor to a MANUAL CARGO RELEASE pedal (2, figure 14-32) at pilots station. The actuating cables are spring loaded by a coil spring in the pulley and spring bracket (7).

14272. Removal - Release Cables. a. Remove floor access door (8, figure 14-31) and pylon access door (9) in cabin.

b. Disconnect upper control cable (10, figure 14-32) from connector (9), by removing cotter pin (11) and lifting out ball terminal.

c. Cut lockwire and disconnect turnbuckle (4) from and upper actuating cables (3 and 5).

d. To remove upper actuating cable (5) proceed as follows.

(1) Upper pulley and spring bracket (7) may be left in place, or may be removed, by removing two attaching screws, washers, and nuts. Lift bracket from lift beam.

(2) Detach ball terminal of upper actuating cable (5) from connector (9) by removing cotter pin.

(3) Remove connector (9), space (8), split guide, and spring from end of upper actuating cable (5).

(4) Remove fairlead from pulley of bracket (7) and pull upper actuating cable (5) out of bracket. Remove bolts, nut and washers to remove pulley from bracket.

e. To remove lower actuating cable (3) proceed as follows:

(1) Disconnect clevis on forward end of lower actuating cable (3) from arm on pedal (2) by removing cotter pin, washer and pin.

(2) Remove fairleads from lower pulley and bracket in pylon compartment and from three pulleys under cabin floor. One pulley is located just aft of fuselage Station 52 bulkhead; two pulleys are just forward of Station 102.

(3) On Serial No. 68-15214 and subsequent, remove nut, washer, screw and clamp from end of boot on forward side of Station 123.0 bulkhead.

(4) Carefully pull lower actuating cable (3) cable section forward through bulkhead grommets.

(5) Remove and replace pulleys, with attaching bolts, nuts, and washers, as necessary.

14-273. Inspection - Release Cables. a. Inspect pulleys for wear and freedom of rotation.

b. Inspect lower and upper actuating cables (3 and 5, figure 14-32) for broken strands, frayed wires, or wear.

c. Inspect pulley brackets and grommets for cracks, wear, and proper installation.

14-274. Repair or Replacement - Release Cables. a. Replace worn and unserviceable lower or upper actuating cables (3 and 5, figure 14-32).

b. Replace pulleys showing wear, rough bearings or deterioration.

c. Replace pulley brackets, grommets and fairleads that show cracks, wear or deterioration.

14-275. Installation - Release Cables. a. Install lower actuating cable (3, figure 14-32) as follows:

(1) Insert threaded terminal of lower actuating cable (3) through hole in Station 23 bulkhead into area under cabin floor.

(2) Route cable through bulkhead grommets and three pulleys below floor, and through lower pulley bracket in pylon compartment. Install fairleads with cotter pins, at pulleys.

NOTE

On Serial No. 68-15214 and subsequent, route cable through boot on forward side of Station 123.0 bulkhead and install clamp, screw Washer and nut.

(3) Attach clevis terminal of lower actuating cable (3) to arm on pedal (2) with fairlead, washer and cotter pin.

b. Install upper actuating cable (5) as follows:

(1) insert ball terminal end of upper actuating cable (5) from outboard side of upper pulley bracket (7). Pull cable through tube of bracket.

(2) Assemble spring, split guide, spacer (8), and connector (9) on end of upper actuating cable (5) inboard of bracket (7). Secure cable ball terminal to connector with cotter pin. Pull parts into tube of bracket.

(3) Install fairlead through outboard side of bracket (7) and install cotter pin to secure upper actuating cable (5).

(4) If removed, place pulley and spring bracket (7) on aft side of support bracket at right lower side of lift beam. Secure with two screws, washers and nuts.

c. Connect lower and upper actuating cables (3 and 5) with turnbuckle (4).

d. Insert ball terminal of upper control cable (10) in connector (9) and secure with cotter pin (11).

e. Adjust release cables and check mechanical and electrical operation (paragraphs 14-269 and 14-263).

f. Install floor and pylon access doors (8 and 9, figure 14-31).

14-276. Adjust - Release Cables. (Refer to paragraph 14-269).

14-277. PEDAL ASSEMBLY.

14-278. Description - Pedal Assembly. A foot pedal (2, figure 14-32) is provided for manual release of the cargo. The pedal is mounted on the floor at Station 23.00 and is connected to the cargo hook release mechanism by a cable assembly.

14-279. Romoval - Pedal Assembly. a. Disconnect clevis terminal of lower actuating cable (34, figure 14-32) from arm of pedal (2) by removing cotter pin and pin.

b. Remove pedal (2) as an assembly by removing five bolts with nuts and washers, to detach stop assembly and eye bracket from Station 23 bulkhead.

14-280. Inspection - pedal Assembly. a. Inspect for wear of bushings in pedal or mounting fittings.

b. Inspect pedal for cracks and deterioration.

14-281. Repair or Replacement—Pedal Assembly. a. Replace bushings if unserviceable.

b. Replace pedal assembly having cracks or other damage that impair operation.

14-282. Installation-Pedal Assembly. a. Align pedal (2, figure 14-32) as an assembly on front of Station 23 bulkhead in cabin ahead of pilot's seat.

b. Attach eye bracket to structure with two bolts, washers, and nuts.

c. Attach stop assembly with three bolts, washers, and nuts.

d. Check for snug fit of pedal (2) in bracket and stop assembly. Adjust shims on pivot bolts as necessary to eliminate end play and to align pedal with stop (1).

e. Connect clevis terminal of lower actuating cable (3) to arm on pedal (2) with pin and cotter pin.

f. Adjust suspension assembly and perform mechanical and electrical operational check (paragraphs 14-269 and 14-263).

14-283. CARGO HOOK.

14-284. Description—Cargo Hook. The cargo hook is a horizontal loading type with an automatic pickup latch and has both electrical and mechanical load release provisions. Cargo quick release can be actuated electrically from a switch located on the pilots cyclic control stick or manually through cables by depressing a foot release pedal that is located between the tail rotor control pedals.

14-285. Removal — Cargo Hook. a. Disconnect lower connector (24, figure 14-33) of electrical cable (1) at cargo hook (18).

b. Remove cotter pins securing ball terminals of upper and lower control cables (3 and 20) to cable lever (23). Remove cables from lever.

c. Remove cable lever (23) and spring (11) arm yoke (9) by removing pin (12), two spacers and cotter pin.

d. Remove cargo hook (18) from yoke (9) by removing two bolts (21), washers, nuts, and cotter pins.

14-286. Inspection—Cargo Hook. a. Inspect cargo hook (18, figure 14-33) for cracks and damage that would impair serviceability.

b. Inspect hardware for security.

c. Inspect moving parts of cargo hook (18) for wear, deterioration and corrosion.

d. Replacement of rubber bumper PN 205-030-772-25. Replace synthetic rubber bumper as follows:

(1) Clean bonding area on panel with naphtha (C178).

(2) Clean inside area of bumper with toluene (C288).

(3) Brush a thin coat of adhesive (C40) approximately 0.010 inch thick on bonding areas and inside bumper.

(4) Allow approximately 1 hour drying time until adhesive becomes tacky. Install bumper on panel (PN 205-030-772-87).

(5) Hold bumper in place for a minimum of one minute.

(6) Allow a minimum of 24 hours drying time before releasing aircraft for flight.

14-287. Repair or Replacement-Cargo Hook. a. Replace cargo hook (18, figure 14-33) if cracks are evident.

b. Repair surfaces that display corrosion damage.

c. Repair small nicks and scratches by honing method.

d. Inspect rubber bumper on panel (PN 205-030-772-85) to see if missing, torn or debonding from panel.

14-288. Lubrication-cargo Hook. (Refer to paragraph 14-262.

☆ U.S. GOVERNMENT PRINTING OFFICE: 1992654-121/41122

PIN:040152-004

14-289. Installation — Cargo Hook.

a. Align cargo hook (18, figure 14-33) to yoke (9) with open side of load beam (17) forward. Install two bolts (21), washers and nuts. Use one washer under bolt head and one washer under nut, maximum twelve washers may be used as spacers. Torque nuts **50 TO 70** inch-pounds, secure with cotter pins.

b. Align cable lever (23) to yoke (9) with spring (11) and two spacers, secure with pin (12) and cotter pin.

c. If required, install lower control cable (20) to internal level (19) and guide (22).

d. Connect ball terminal of upper and lower control cable (3 and 20) to cable lever (23) and secure with cotter pins.

e. Attach connector (24) of electrical cable (1) to receptacle on cargo hook (18).

f. Adjust cargo suspension assembly and perform mechanical and electrical operational checks (paragraphs 14-269 and 14-263).

14-290. Adjustment — Cargo Hook. (Refer to paragraph 14-269).

Description:

HAP-0001-01-1 External Cargo Hook is a cargo carrying device used in conjunction with load carrying slings for the lifting and transporting of external loads by rotory wing aircraft. This is a self-loading device with remote electrial release. Cargo may be free drop in flight, or released with assistance of ground crews, by use of a external manual release lever. The cantilevered load beam pivotes on one end and latches on the other is automatically relatched after cargo is released. The hook assembly is bolted directly to a special framework attached as an integral part of the aircraft.

General specifications:

a. Operating capacity . . . . . 4,500 lbs.
b. Drop capacity . . . . . 4,500 lbs.
c. Size . . . . . 4 3/16” x 9 1/8” x 10”
d. Weight . . . . . 9 1/2 lbs.
e. Voltage requirement . . . . . 24-28 VDC.
f. Amperage . . . . . 14 amps.

14-291. OPERATING INSTRUCTIONS:

a. With load beam (33) in closed position, slide cargo supporting device over the cantilevered load beam, past the spring loaded keeper (46) and into the throat of the hook. The keeper will keep the cargo carrying sling ring from escaping the load beam. See Figure 14-34.

b. Cargo is now ready to lift or transport.

c. To release load, master power switch must be on. Cargo may then be released remotely by the pilot by engaging the push button release switch located on the pilots/copilots cyclic stick.

d. A mechanical release is provided for emergency use in case of electrical matfunction. This release is pilot operated with a foot pedal. Mechanical release is needed in an emergency only.

e. Only momentary switch contact is required to release cargo. It is normal for release solenoid to chatter while the release button is engaged. Since solenoid operates almost instantaneously, push button need be held only momentarily (four seconds, maximum).

f. A manual release lever (14) is provided on the hook housing for ground crew use. See Figure 14-33.

g. When beam (33) is unlatched, it swings down, pivoting on trunnion pin, (34) until attached device slides off load beam. After load is released, the load beam is returned to latch position. If beam fails to relatch push cargo release switch button. See Figure 14-34.

h. Avoid attachment of two separate sling simultaneously when included angle between them is more than 45˚, to compensate, use a single point sling connector as shown in figure 14-33.1.

14-292. Operational Sequence:

a. Cargo sling is supported by load beam (33) and retained in place by keeper (46). Load beam is supported by trunnion pin (34) and beam latch (44). Latch (44) is locked in place by an overcenter lever (1) and kept from vibrating loose by another overcenter trip link (43). See Figure 14-34.

b. Rotary solenoid (10) is energized by load release button (operater switch), it moves overcenter trip link (43), which in turn pivots toggle latch assembly (42) upward, releasing over-center pivot link (1), which moves beam latch (44) about its pivot bolt (49) until load beam tip (33) can latch.

c. Under influence of cargo load, beam (33) pivots about its trunnion pin (34) until load slides off the beam.

d. Toggle latch (42) pivots upward, engages switch actuator(44), causing safety switch (39) to snap open. Solenoid electrical circuit is then broken.

e. Spring (30) returns load beam (33), sharply striking beam latch (44), causing it to pivot back into latched position. Overcenter mechanism is returned to "latch and lock" positions by spring (31).

f. Pilot's emergency release system and manual release are both operated through release lever assembly (55). When either manual system is actuated, it is returned to latch position by release lever spring (53). Indicator (52) denotes position of latching mechanism as open or latched by red line pointer on release mechanism cover (51).

14-293. Installation:

a. HAP-0001-01-1 cargo hook is mounted to the aircraft by a cable and shackle arrangement attached through holes in each upper corner of the cargo hook case, or bolted directly through these holes to a special frame mounted on bottom of the aircraft. Release cable and electrical harness connections are provided on the frame.

b. Cargo hook assembly is mounted so loads are allowed to swing laterally, transferring load stresses vertically through cargo hook housing. Load riggers should avoid side loads that transfer stresses through housing as moments.

c. To install emergency release cable, move manual release lever (55) until cable lock screw (54) appears beneath access hole in manual release cover (51). Back off screw (54) until cable can be passed beneath it and into the slot. Tighten screw to prevent cable ball end from escaping. Adjust cable so there is 1/4"- 1/2" clearance between ball and release arm (55). See Figure 14-34.

d. Assure suspension sysem is wired per Figure 14-33.2 wiring diagram prior to fastening cannon plug to connector (13). See Figure 14-34.

e. The power on master switch and push button release switch are located conveniently to the pilot.

Maintenance and Disassembly Instructions

NOTE

NO SPECIAL TOOLS ARE REQUIRED.

14-294. Disassemble:

a. Disconnect cannon plug connector (24) and emergency release cable at cable lever (23). Remove bolt (21) and disconnect hook from its suspension assembly. See Figure 14-33.

b. Remove fastening bolts, washers, and nuts (21), (22), and (48). See Figure 14-34.

c. Remove cotter pin (58), nut (59) and washer (22).

d. Push bolt (23) through cover (47) leaving spring (31) attached to bolt (23) and bolt retained in case (41).

e. Remove cotter pin (9), nut (8) washer (7) and bolt (49).

f. Gently pry case (41) and cover (47) apart. Exercise caution not to damage aluminum case and cover.

g. Remove cover (47) from case (41). Ensure all loose parts stay in case (41).

NOTE

Normally no other components need be removed for inspection, adjustment, or lubrication unless unusual damage or wear has occured.

h. Solenoid may be removed by removing access cover screws (17), solenoid screws (30) and unsoldering wires from connector (13).

i. Manual release mechanism may be disassembled by removing attach screws (2 & 4), screw heads are staked.

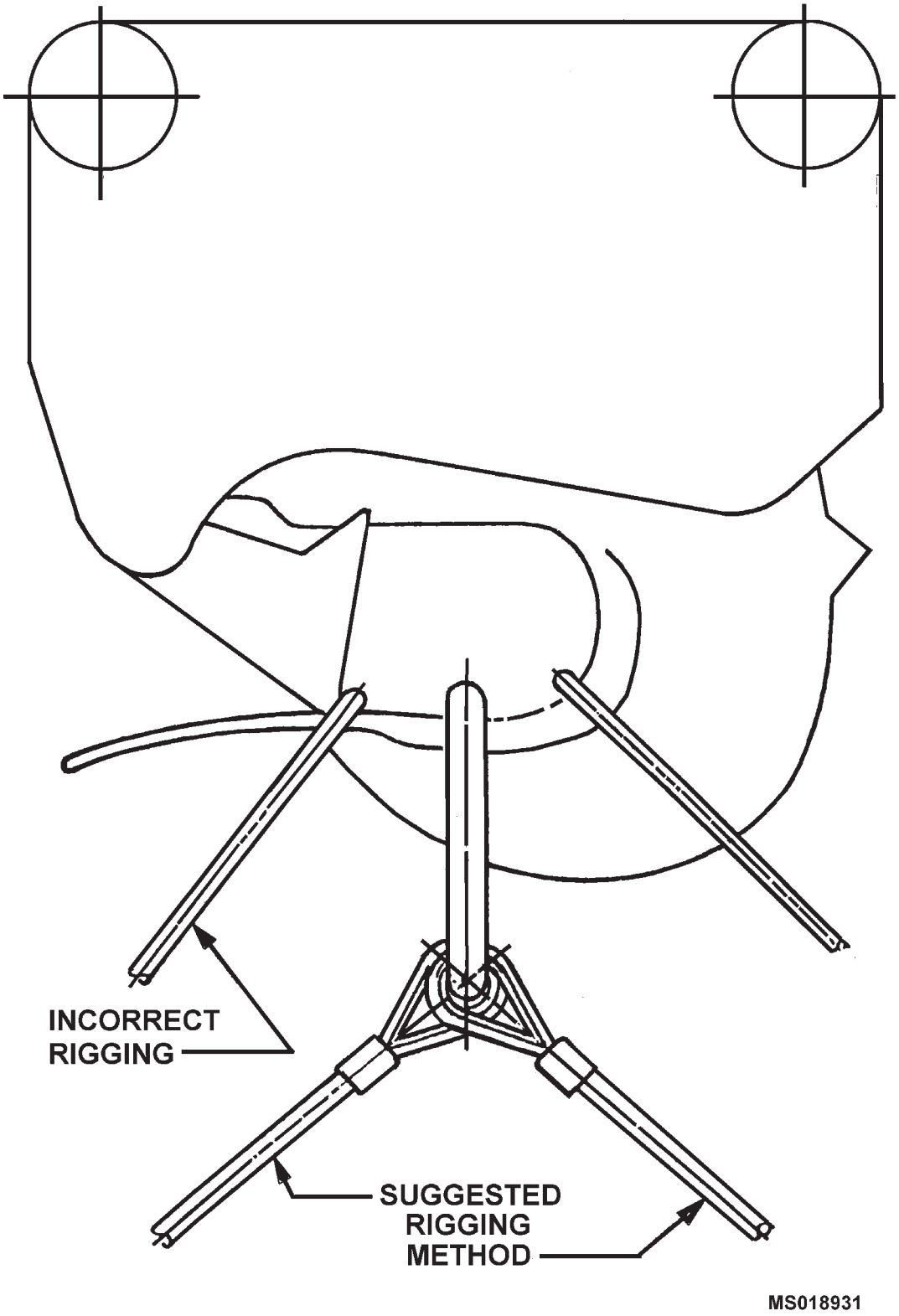

Figure 14-33.1. Rigging Method

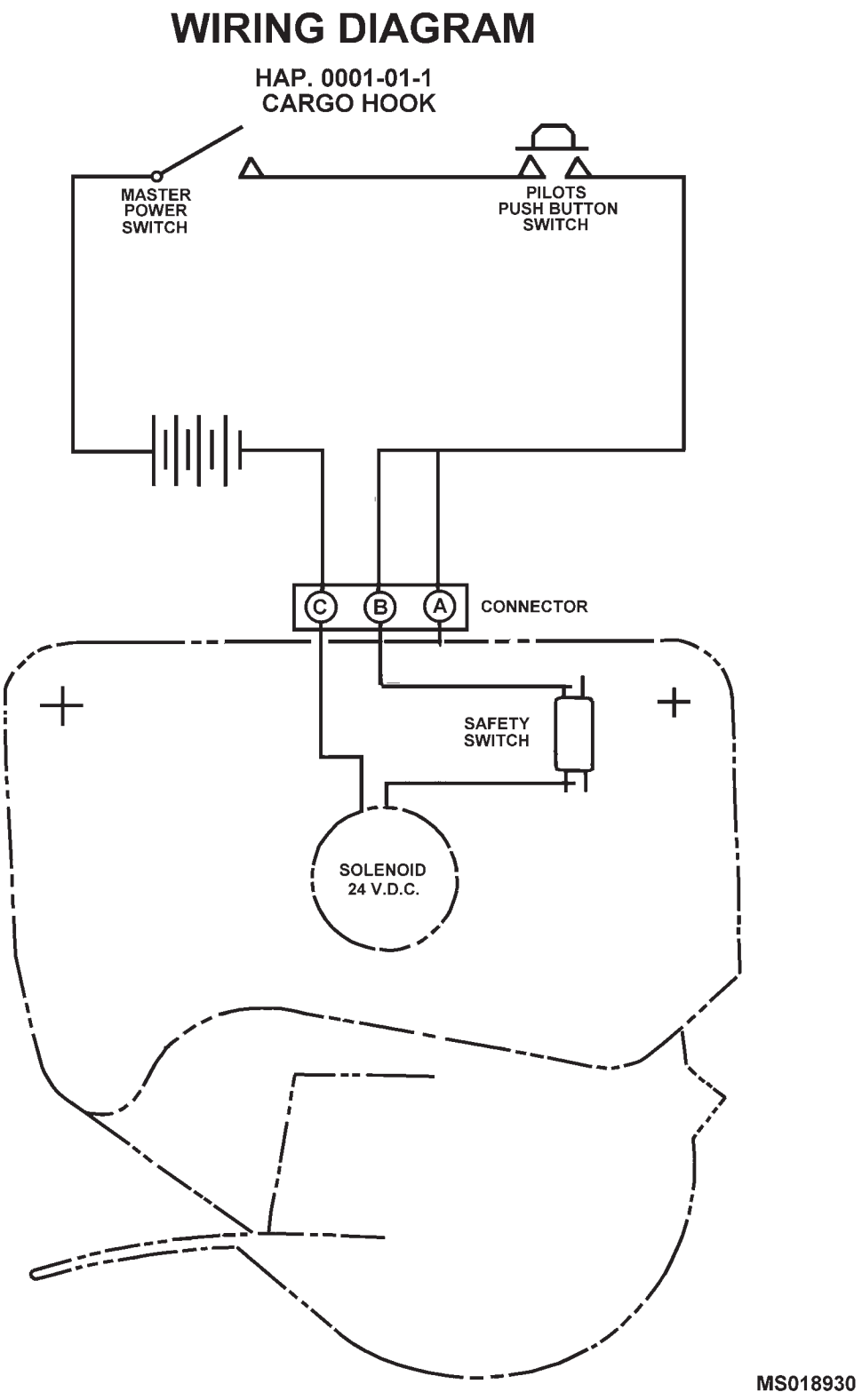

Figure 14-33.2. Wiring Diagram

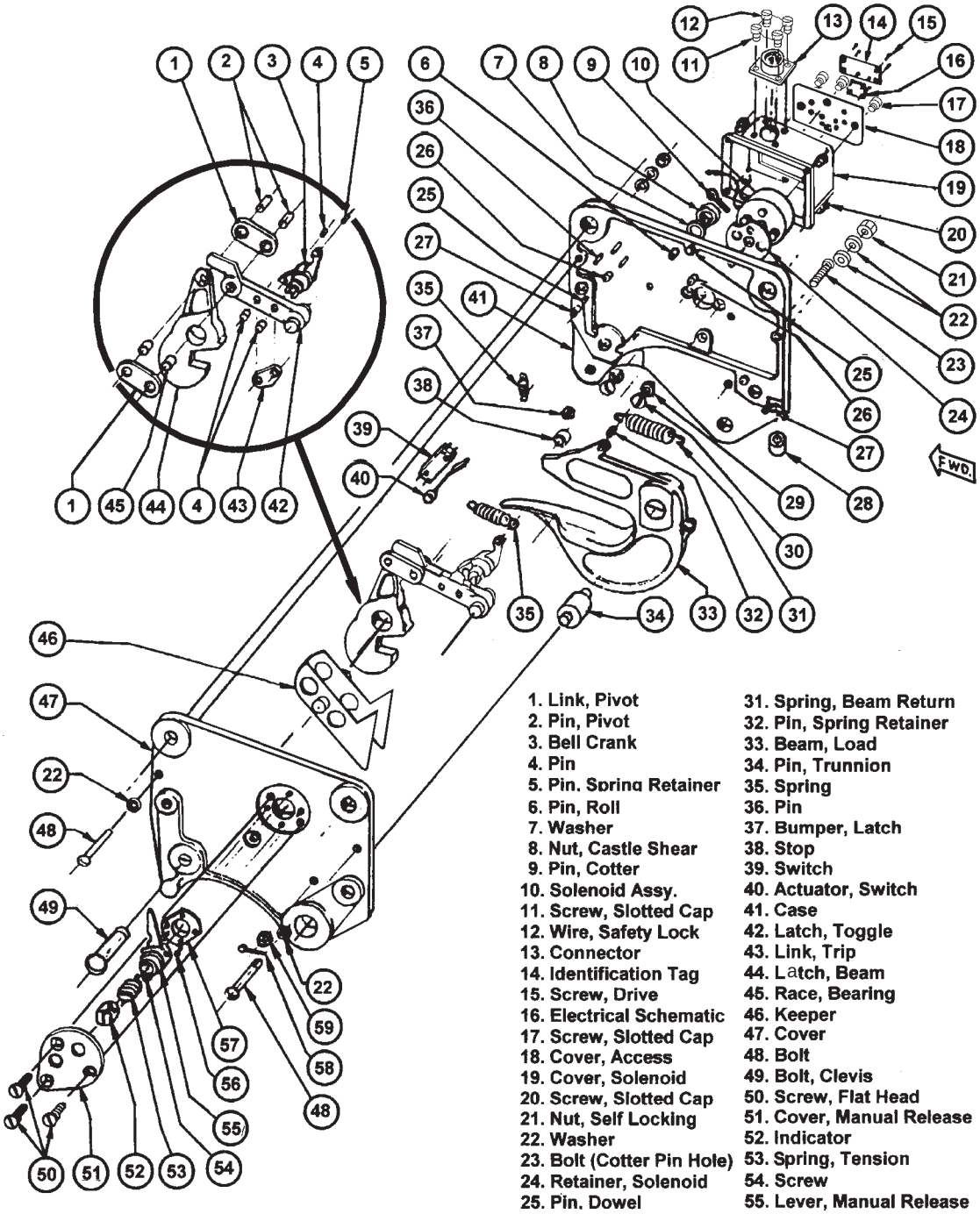

1. Link, Pivot
2. Pin, Pivot
3. Bell Crank
4. Pin
5. Pin, Spring Retainer
6. Pin, Roll
7. Washer
8. Nut, Castle Shear
9. Pin, Cotter
10. Solenoid Assy.
11. Screw, Slotted Cap
12. Wire, Safety Lock
13. Connector
14. Identification Tag
15. Screw, Drive
16. Electrical Schematic
17. Screw, Slotted Cap
18. Cover, Access
19. Cover, Solenoid
20. Screw, Slotted Cap
21. Nut, Self Locking
22. Washer
23. Bolt (Cotter Pin Hole)
24. Retainer, Solenoid
25. Pin, Dowel
26. Pin, Step
27. Pin, Roll
28. Shock Absorber
29. Bushing
30. Nut, Hex
31. Spring, Beam Return
32. Pin, Spring Retainer
33. Beam, Load
34. Pin, Trunnion
35. Spring
36. Pin
37. Bumper, Latch
38. Stop
39. Switch
40. Actuator, Switch
41. Case
42. Latch, Toggle
43. Link, Trip
44. Latch, Beam
45. Race, Bearing
46. Keeper
47. Cover
48. Bolt
49. Bolt, Clevis
50. Screw, Flat Head
51. Cover, Manual Release
52. Indicator
53. Spring, Tension
54. Screw
55. Lever, Manual Release
56. Rivet
57. Support
58. Pin, Cotter
59. Nut, Castle

MS018932

Figure 14-34. Cargo Hook

j. To disassemble components of latch assembly, staked pins (2) and (4) must be removed. Place pin to be removed on flat surface over hole large enough to accomodate pin, and press or drive out pin with proper sized punch.

14-295. Inspection:

a. Manually operate mechanism and visually inspect components for wear, cracks, binding, burrs and corrosion. Pay special attention to wear surfaces on load beam (33), latch (44) and trip link (43). Check for burrs that might inhibit movement of mechanism. See Figure 14-33.

b. Check latch bumper (37). Replace if worn enough to prohibit contact with latch (44) in open position.

c. Inspect shock absorber (28). If ware shows, trim off burred sides or replace shock absorber. Shock absorber has a life expectancy of approximately 1000 load drops.

d. Inspect all staked screws and pins (interior and exterior) for tightness. Tighten and restake if loose.

e. Inspect bearings for corrosion, binding, or rough operation. Replace if any above are found. Refer to paragraph 14-294 j. for disassembly.

f. Check springs to insure they are positioned correctly and are functioning properly. Load beam spring (31) and keeper spring (35) may be replaced without separating case.

g. Check that latch toggle (42) move easily over center to open position and back under spring tension. Mechanism is designed to lock in latched position and remain locked until released by bell crank (3). It should remain in position until released by inertia of beam latch (33). An 8 to 12 pound load is required to over come beam return spring (31) to open beam when unlatched.

h. Safety switch (39) is operated by movement of switch actuator (40). Latch assembly pivots to release load beam, causing switch actuator (40) to pivot into switch (39), opening solenoid circuit. Check switch (39) continuity while manually operating mechanism. Bend actuator arm for alignment if required. Check electrical connections. Clean or repair as needed.

i. Check solenoid (10) cross pin, bushings, and attach screws. Replace or repair if cross pin hole is elongated, or if bushings, or solenoid screws are loose. Apply 28 VDC to solenoid and check its operation. Reference 14-294 h. for solenoid removal.

j. Check operation of load beam (33). Apply voltage to solenoid while manually pulling load beam against return spring (30). Open beam about 15° and release while solenoid is still energized. Beam should swing back and relatch.

14-296. Lubrication:

a. Lightly oil keeper (46), pivot shafts, beam latch bearings (44), and beam latch pivot bolt (49) with AN-O-6 oil or equivalent. See Figure 14-33.

b. Apply MIL-G-81322B (or equivalent) grease liberally to beam latch (44) where it seals to case.

c. Apply MIL-G-46017 (or equivalent) lubrication to beam trunnion (34), switch actuator (40), bell crank (3), manual release lever (55), and trip link (43).

14-297. Assembly Instructions:

NOTE

The following information is provided with the intent that components secured with lock wire or staked in place have not been disassembled.

a. Insert keeper (46) pivot lug into case and attach spring (35). See Figure 14-34.

b. Install latch (44) linkage assembly.

(1) Turn solenoid (10) cross pin to its clockwise limit.

(2) Insert latch linkage assembly into case (41) while holding linkage in unlatched position. Work gently into place. Do not force.

c. Cheek movement of linkage to insure smooth operation.

CAUTION

If wiring is directed around spring retainer pin (6), spring must be loaded first and wire routed over pin.

d. Install bell crank return spring (35) on (5 & 6) pins.

e. Place bumper (37) into case (41).

f. Place shock absorber (28) into case (41).

g. Pin load beam (33) into case (41) with trunnion pin (34).

h. Attach beam return spring (31) over retainer pin (32).

i. Insert bolt (23) about 1/2 length through case (41) and attach beam return spring (31) tang over bolt (23).

j. Place bell crank stop (38) over pin (26).

k. Place switch (39) over pin (36). Place switch actuator (46) over pin (25) and position actuator blade between switch and pin (36) with top of actuator blade pointing to center of case. Install cover (47).

NOTE

Lightly coat edge surface of cover (47) with Proseal 760 B-2 sealing compound or similar material. Sealant should be used sparingly. Care should be exercised to keep sealant from contacting moving surfaces.

l. Align cover (47) over case (41) and gently press into place.

m. Align indicator (52) slot with mark on manual release cover (51).

n. Firmly press case (41) and cover (47) together.

o. Move load beam spring retainer bolt (23) through hole in cover.

p. Install nut (59) on bolt (23) and screw down to face of cover (47) do not tighten. Install cotter pin (58).

q. Align latch (44) and insert pivot bolt (49) through case and cover.

r. Check for proper movement of mechanism by operating manual release lever (55).

s. Insert bolts (48), washers (22), and tighten lock nuts (21).

t. Install washer (7) and castle nut (8). Finger tighten nut (8). Back off nut until slot in castle nut (8) aligns with pin hole in bolt (49). Install cotter pin.

Final check: Support cargo hook in vertical position and hang 12 pound load from beam. Energize solenoid and weight should drop from load beam. Beam will swing back and relatch. Should beam latch (44) be in latched position and beam tip (33) still unlatched energize the solenoid circuit momentarily and beam should relatch.

14-298. Painting:

Keep all moving surfaces free of paint.

CHAPTER 15

AUXILIARY POWER PLANTS

(Not Applicable)

CHAPTER 16

MISSION EQUIPMENT

16-1. EXTERNAL STORES SUPPORT.

16-2. Description — External Stores Support. Four external stores supports can be installed on the helicopter. Each assembly consists of a forward and aft support beam attached to the fuselage, a cross beam installed between the two support beams, and two sway braces attached diagonally between the support beams and the center of the cross beam.

16-3. Removal — External Stores Support. a. Remove nuts (22 and 12, figure 16-1), washers (21 and 13), and bolts (20 and 14) attaching sway braces (16) to support beams (5 and 23) and cross beam (15). Remove sway braces.

b. Remove nuts (8), washers (7), and bolts (6) attaching cross beam (15) to support beams (5 and 23) and remove cross beam.

c. Remove nuts (2), washers (3), bolts (4), and cotter pins (1) attaching forward and aft support beams (5 and 23) to fuselage and remove support beams.

WARNING

Cleaning materials are flammable and toxic. Avoid skin contact and breathing of solvent vapors.

1640 Cleaning — External Stores Support. Clean parts by washing with a bristle brush (C52) and solvent (C261).

16-5. Inspection — External Stores Support. a. Inspect bushings in support beams (5 and 23, figure 16-1) and in tangs of cross beam (15) for excessive wear and damage.

b. When external stores have been mounted on the aircraft, inspect support beams (5 and 23) and cross beam (15) for corrosion and cracks. Pay particular attention to attaching points of support beams. Perform a dye penetrant inspection (refer to TM 43-0103, inspecting for fatigue cracks in an area approximately six inches adjacent to the upper attachment point and any other area where indications of cracks are found.

c. Inspect for loose, missing, or improperly installed hardware.

d. Inspect sway braces (16) for damage and excessive wear in clevis mounting holes.

e. The corrosion and/or mechanical damage limits for the external stores are as follows:

(a) Hardpoints: Negligible damage; none. Reparable damage: Not to exceed a minimum thickness of 0.335 inch after clean up. Damage requiring replacement; damage in excess of 0.335 inch minimum thickness.

(b) Mount holes in Hardpoints: Negligible damage; damage less than 0.010 inch in depth. Reparable damage; elongation not to exceed 0.4380 inch I.D. after clean up. Damage requiring replacing; elongation in excess of 0.4380 inch; or that has a tearout thickness less than 0.660 inch.

16-6. Repair or Replacement — External Stores Support. a. Replace support beams (5 and 23, figure 16-1) if cracked or if bushings in attachment point are worn sufficiently to allow movement when parts are assembled.

b. Repair small nicks and scratches by polishing out with 400 grit sandpaper (C233). Coat repaired areas with primer (C206).

c. Replace sway braces (16) if bent, dented or if riveted clevis end is excessively worn. Adjustable clevis end can be replaced separately.

WARNING

Do not use fasteners other than clevis bolts to prevent casting failures.

16-7. Installation — External Stores Support. a. Position each support beam (5 and 23, figure 16-1) on helicopter and secure to structure with bolts (4) and nuts (2).

b. Position cross beam (15) between outer ends of forward and aft support beams (5 and 23) and install attaching bolts (6), washers (7), and nuts (8).

c. Attach sway braces (16) to cross beam (15) and support beams (5 and 23) using bolts (22 and 12), washers (21 and 13) and bolts (20) and 14). Adjust clevis on sway brace, if necessary, to align with eyebolt in cross beam.

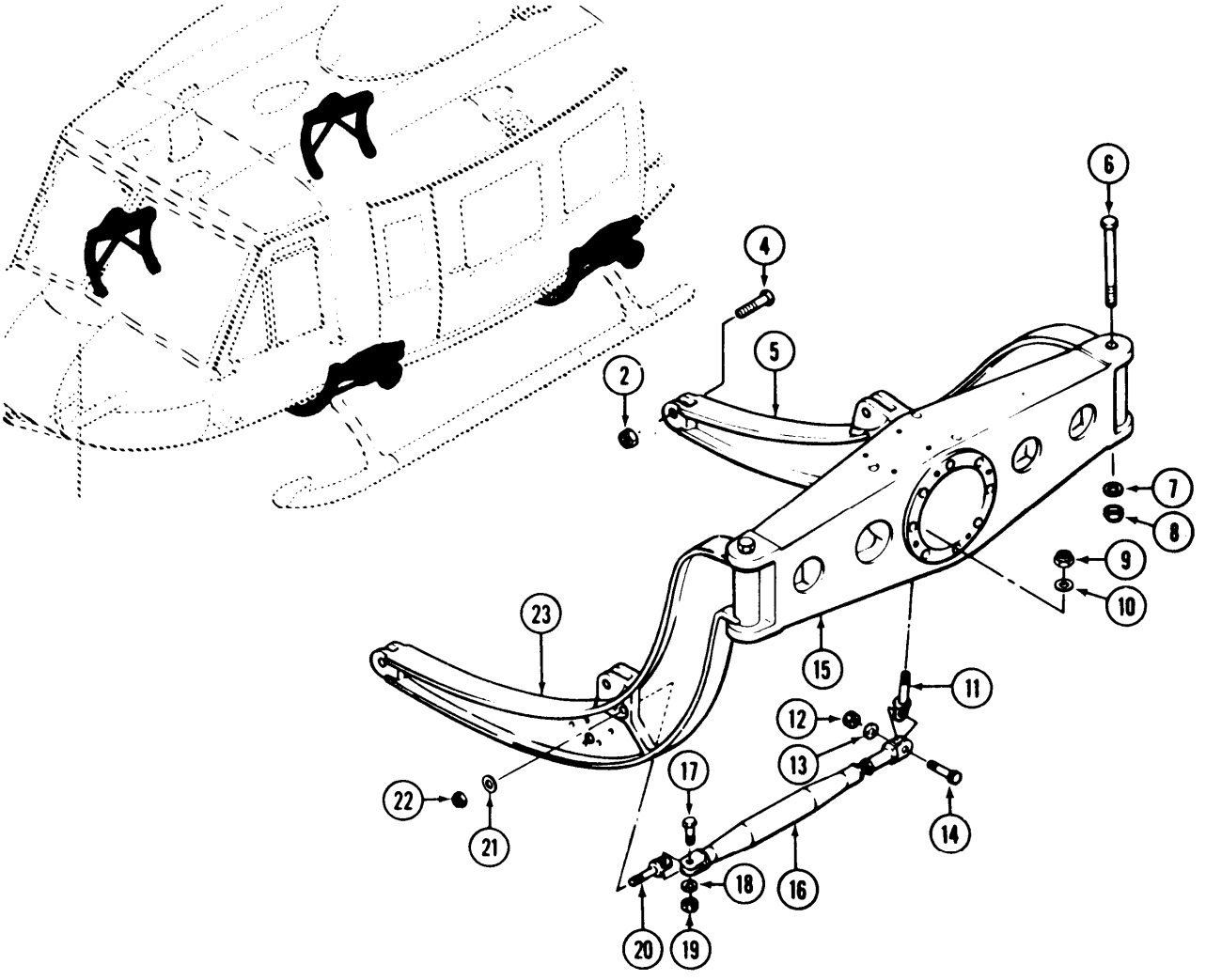

1. Deleted
2. Nut
3. Deleted
4. Bolt
5. Support beam, aft
6. Bolt
7. Washer
8. Nut
9. Nut
10. Washer
11. Eyebolt
12. Nut
13. Washer
14. Bolt
15. Crossbeam
16. Sway brace
17. Bolt
18. Washer
19. Nut
20. Eyebolt
21. Washer
22. Nut
23. Support beam, fwd

Figure 16-1. External Stores Support Assembly

16-8. EMERGENCY JETTISON RELEASE MECHANISM.

16-9. Description. A series of cables, actuated by a manually operated jettison lever located by the pilots seat, enables the pilot to mechanically jettison externally carried stores or equipment. These cables are equipped with adjustable fittings which facilitate final rigging and adjustment during installation of store or equipment on the external stores support.

16-10. Removal — Emergency Jettison Release Mechanism. a. Remove access plate from lower fuselage skin below external stores forward support beam.

b. If external stores are installed, disconnect stores release cables from lateral release cables (2, figure 16-2).

c. Remove three cotter pins, washers and flat head pins attaching cable assemblies to bellcrank (3). Remove two lateral release cable assemblies (2) from grommet and pulleys.

d. Remove cotter pin, nut, washer, and bolt attaching bellcrank (3) and remove bellcrank.

e. Remove nuts, washers, spacers, screws, and clamps attaching cable guard (23) to pedestal. Remove cotter pin and pin attaching longitudinal release cable (18) to emergency release lever assembly (20). Remove cable guard and grommet (22).

f. Remove cotter pins, pins, nuts, washers and bolts holding longitudinal release cable pulleys (24) to pulley brackets and remove pulleys.

g. Remove grommets (19) which guide longitudinal release cable (18) and remove release cable.

h. Remove cotter pin, nut, washer and clevis bolt attaching lever assembly (20) to support assembly (25).

i. Remove nuts, washers, bolts, and spacers attaching support assembly (25) to pedestal and remove support assembly.

16-11. Cleaning — Emergency Jettison Release Mechanism.

WARNING

Cleaning materials are flammable and toxic. Avoid skin contact and breathing of solvent vapors.

a. Clean lever (20, figure 16-2), support (25), and bellcrank (3) by washing with a bristle brush (C52) and solvent (C261).

b. Wipe cables with a clean cloth moistened with solvent (C261).

16-12. Inspection — Emergency Jettison Release Mechanism. a. Inspect pulleys for wear, damage, and freedom of rotation.

b. Inspect cables for broken or frayed wires.

c. Inspect grommets for wear.

d. Inspect lever assembly for serviceability and damage.

e. Inspect support assembly bushing for wear.

f. Inspect bellcrank for damage or wear at cable attachment holes and center pivot hole.

16-13. Repair or Replacement — Emergency Jettison Release Mechanism. a. Replace worn and unserviceable pulleys and grommets (figure 16-2).

b. Replace frayed or unserviceable cables.

c. Replace damaged or unserviceable lever assembly.

d. Replace support assembly if bushing is worn or unserviceable.

e. Replace bellcrank if cable attachment holes or center pivot hole is worn.

16-14. Installation — Emergency Jettison Release Mechanism. a. Position support assembly (25, figure 16-2) on pedestal and install attaching bolts, spacers, washers, and nuts.

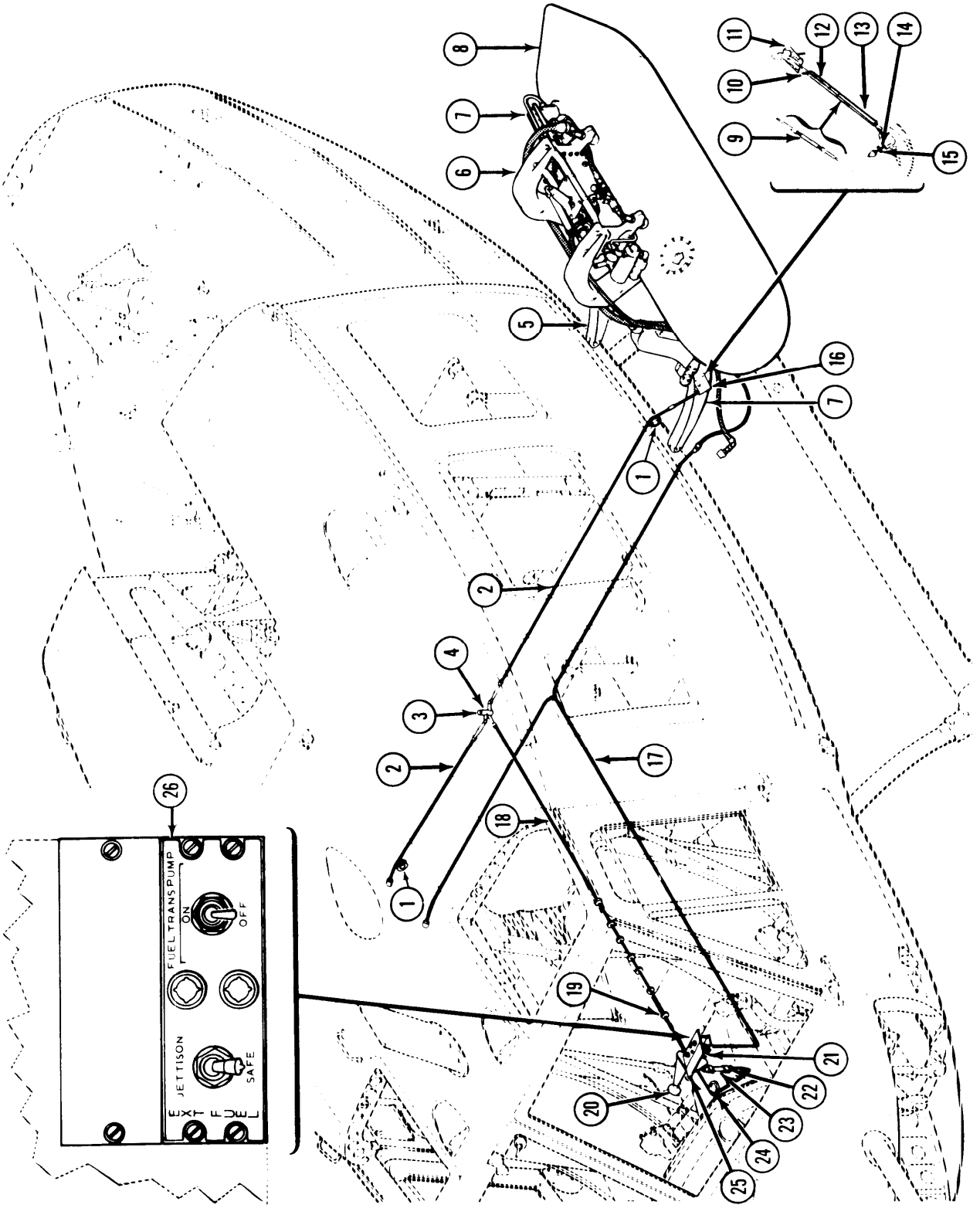

Figure 16-2. Manual Release Mechanism (Sheet 1 of 2)

1. Pulley
2. Lateral release cable assemblies
3. Bellcrank
4. Manual release mechanism
5. External stores support assembly
6. Pylon support
7. Pylon assembly
8. Auxiliary fuel tank
9. Barrel
10. Cable assembly
11. Pulley brackets
12. Upper guard tube
13. Lower guard tube
14. Lower cable assembly
15. Grommet
16. Lateral release cable pulleys
17. Electrical release controls
18. Longitudinal release cable assembly
19. Grommets
20. Emergency release lever assembly
21. Control panel
22. Grommet
23. Cable guard
24. Longitudinal release cable pulleys
25. Support assembly

Figure 16-2. Manual Release Mechanism (Sheet 2 of 2)

b. Position emergency release lever assembly (20) on support assembly (25) and install attaching clevis bolt, washer, nut, and cotter pin.

c. Thread, longitudinal release cable (18) through bulkhead openings and install grommets (19).

d. Position longitudinal release cable pulleys (18) in pulley brackets and install washers, nuts, pins and cotter pins.

e. Thread forward end of longitudinal release cable (18) through cable guard (23) and attach to emergency release lever assembly (20) by installing pin and cotter pin.

f. Position cable guard (23) and install grommet (22) and attaching clamps, screws, spacers, washers, and nuts.

g. Position bellcrank (3) and install attaching screw, washer, nut, and cotter pin.

h. Position aft end of longitudinal release cable (18) and inboard end of lateral release cable assemblies (2) on bellcrank (3), and attach with flat head pins, washers, and cotter pins.

i. Position lateral release cables (2) through grommet and pulleys (1).

j. When external stores are installed, connect stores release cables to lateral release cables (2). Adjust and rig release mechanism in accordance with each external store.

k. Reinstall removed access panels.

16-15. LITTER RACK SAFETY.

16-16. Description — Litter Rack. Two different litter rack installations may be used in UH-1H/V helicopters. One installation accommodates six litters (three on a side, one above the other) parallel to cabin center line in aft cabin passenger compartment, and outboard transmission support structure (figure 16-3). The other installation accommodates three litters (one above the other) parallel to, and just forward of, the aft cabin passenger compartment aft bulkhead (figure 16-4). Litters can be quickly installed for transporting patients, or rapidly removed for carrying cargo or personnel.

16-17. Inspection — Litter Rack. a. Inspect litter support straps for material deterioration and broken stitching. Check fitting on ends of straps for damage and proper operation.

b. Inspect litter support brackets for damaged mounting studs and proper operation of latch.

c. Inspect seat belt extensions for material deterioration, broken stitching, and damaged end fittings.

d. Inspect shelf assembly (11, figure 16-3) for damage and loose or missing hardware.

16-18. Removal — Litter Rack. a. Remove six litter rack installation (figure 16-3) as follows:

(1) Remove and store safety belts (7) when litters are removed.

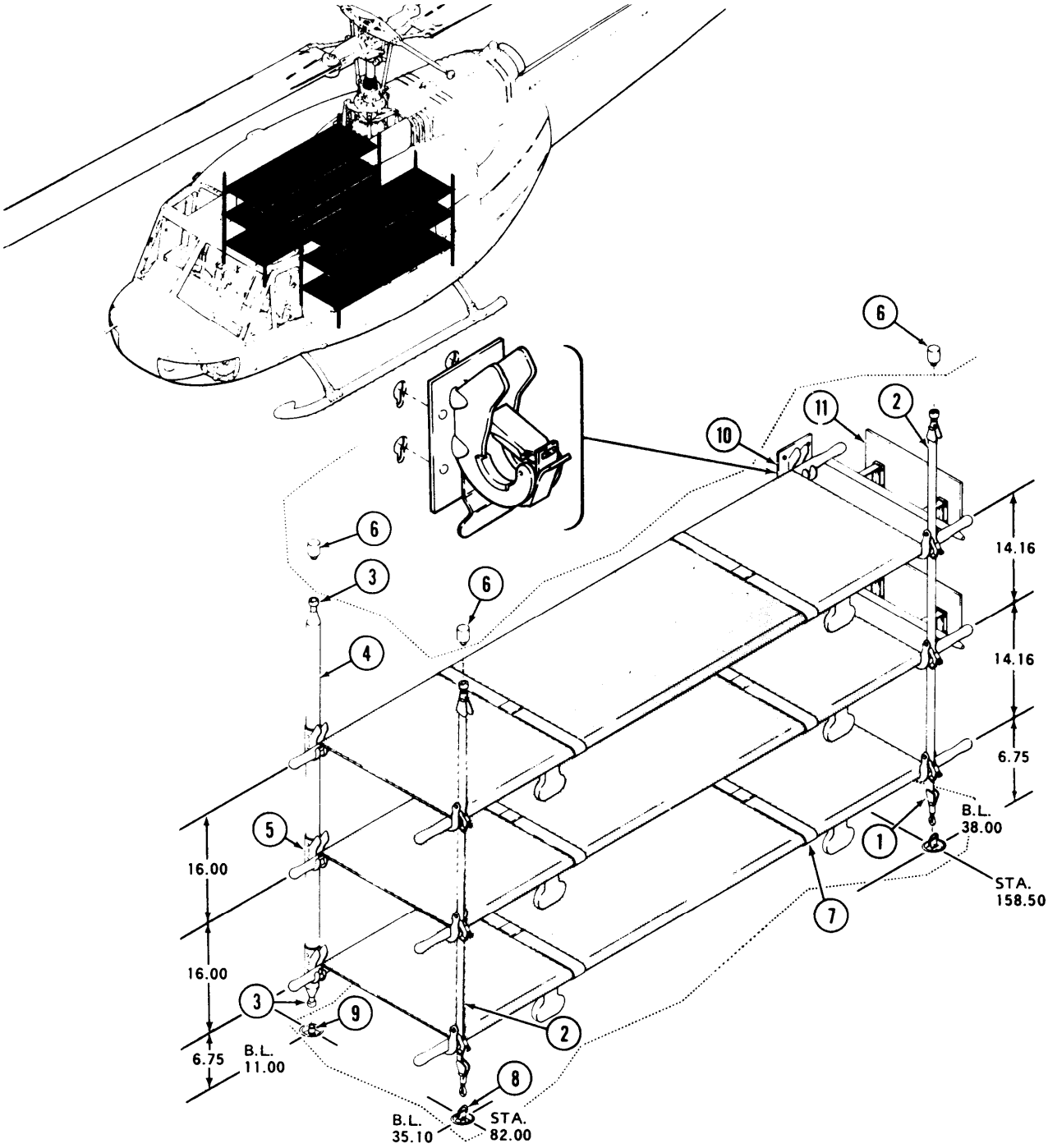

1. Tension fitting
2. Strap assembly
3. Stud lock
4. Stanchion
5. Support bracket
6. Roof studs
7. Safety belts
8. Tiedown ring
9. Floor stud
10. Support brackets
11. Shelf Assembly

Figure 16-3. Litter Rack Installation (6 Litters)

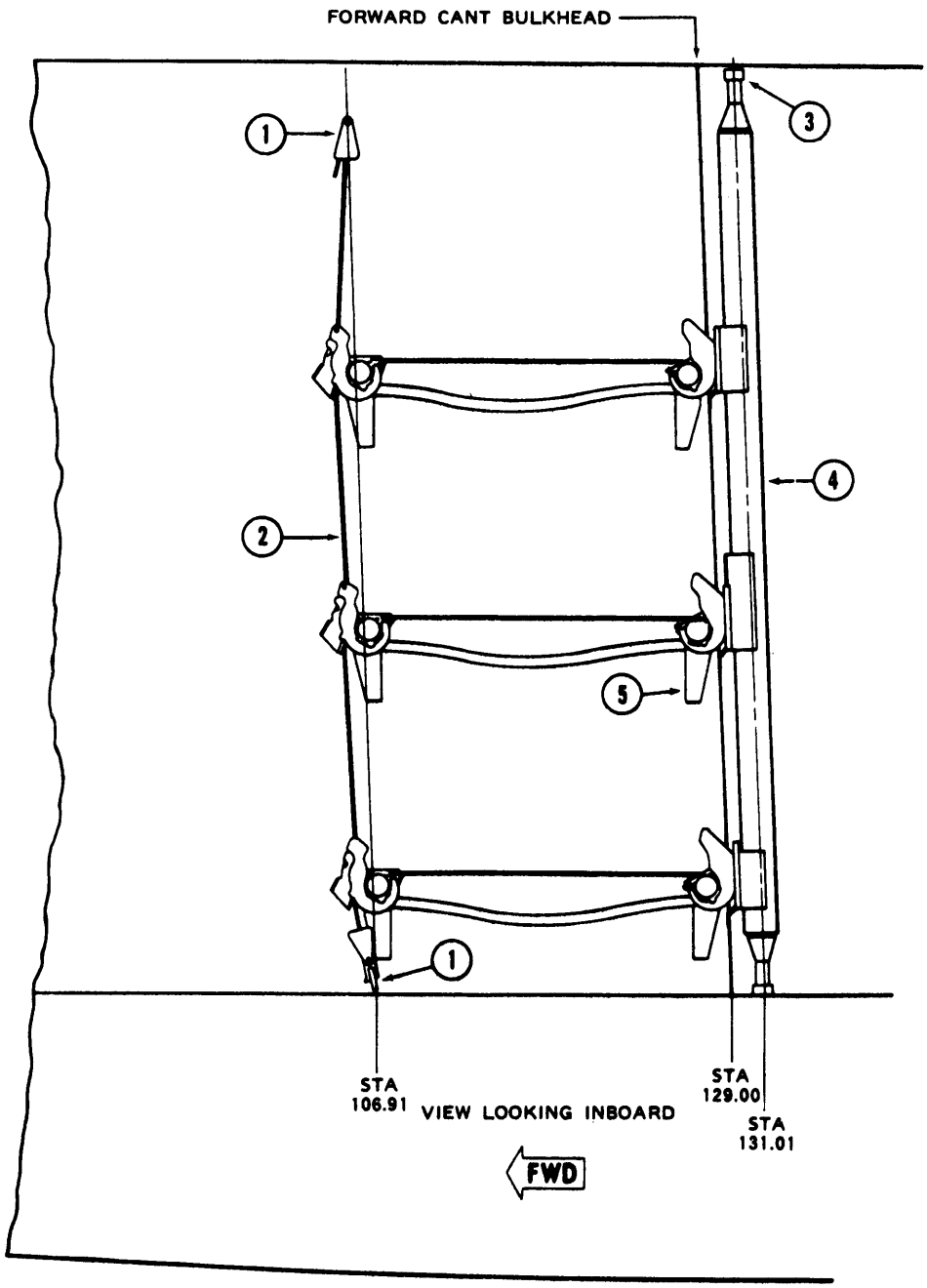

1. Tension Fitting
2. Strap assemblies
3. Stud locks
4. Stanchion
5. Support brackets

Figure 16-4. Litter Rack Installation (3 Litters)

(2) Release tension on each strap assembly (2). Unhook strap fitting from cargo tie-down ring, loosen upper fitting and detach strap from roof stud.

(3) Remove brackets (10) from keyhole slots in pylon support walls and brackets (5) from stanchions (4). Release stanchion stud locks (3) from roof and deck studs.

(4) Remove bolts and washers to detach shelf assemblies (11) with plates from cabin aft bulkhead.

b. Remove three litter rack installation (figure 16-4) as follows:

(1) Remove and store safety belts when litters are removed.

(2) Release tension on each strap assembly (2). Unhook strap fittings from cargo tiedown rings, loosen upper fitting, and detach strap from roof stud.

(3) Remove support brackets (5) from stanchions (4).

16-19. Repair — Litter Rack. a. Replace litter support straps and seat belt extension for material deterioration or damaged end fitting.

b. Replace litter support brackets if mounting studs are damaged or if latching mechanism is damaged.

c. Replace shelf assembly (11, figure 16-3) if damaged. Replace damaged or missing hardware for attaching shelf.

16-20. Installation — Litter Rack. a. Install six litter racks (figure 16-3) as follows:

(1) Attach two strap assemblies (2) to roof studs and cargo tiedown rings in floor at locations shown. Apply tension to straps at cabin roof fittings.

(2) Install four shelf assemblies (11) with plates on cabin aft bulkhead at locations provided with threaded inserts at W.L.41.0 and 56.51. (Plates are interchangeable. Shelf assemblies P/N 205-070-770-1 are for left side and 205-070-770-2 for right side). Use two bolts (AN4-5A) in each shelf and plate with washers (AN960PD416), one washer under bolt head and one washer next to bulkhead.

(3) Install support brackets (10) on right and left side walls of pylon support on plates located at STA. 158.5, W.L. 28.75, 42.91 and 57.07. Attach each bracket by positioning four studs in upper ends of plate slots. Then press downward to force studs into narrow ends of slots.

(4) Install two stanchions (4) between roof studs and deck fittings at locations shown. Secure brackets (5) on each stanchion in same manner used to secure brackets to wall plates in preceding step.

(5) Safety belt extensions (7) is used in conjunction with safety belts from seat installation. Two required each litter.

b. Install three litter rack (figure 16-4) as follows:

(1) Attach two strap assemblies (2) to roof studs and cargo tiedown rings in floor at locations shown. Apply tension to straps at roof fittings.

(2) Install two stanchions (4) between roof studs and deck fitting at locations shown.

(3) Secure support brackets (5) to stanchions by positioning four studs in upper end of slots in plates on stanchions. Press downward on brackets to force studs into narrow end of slots.

(4) Use two seat belt extensions and two safety belts from seats for each litter.

16-21. SMOKE GENERATING SUB-SYSTEM.

16-22. Description -- Smoke Generating Subsystem. The smoke generating subsystem basically consists of the oil tank and hoses, pump and motor assembly and nozzle ring. A new designed bench seat and door panel is necessary to accept the smoke generating subsystem. The tank capacity is **50** gallons and provides approximately three minutes of smoke generator operation.

16-23. Removal -- Smoke Generating Subsystem.

WARNING

Make sure all electrical power is turned off before performing any maintenance on smoke generating subsystem.

a. Remove switch by disconnecting connector on switch cord from connector in roof.

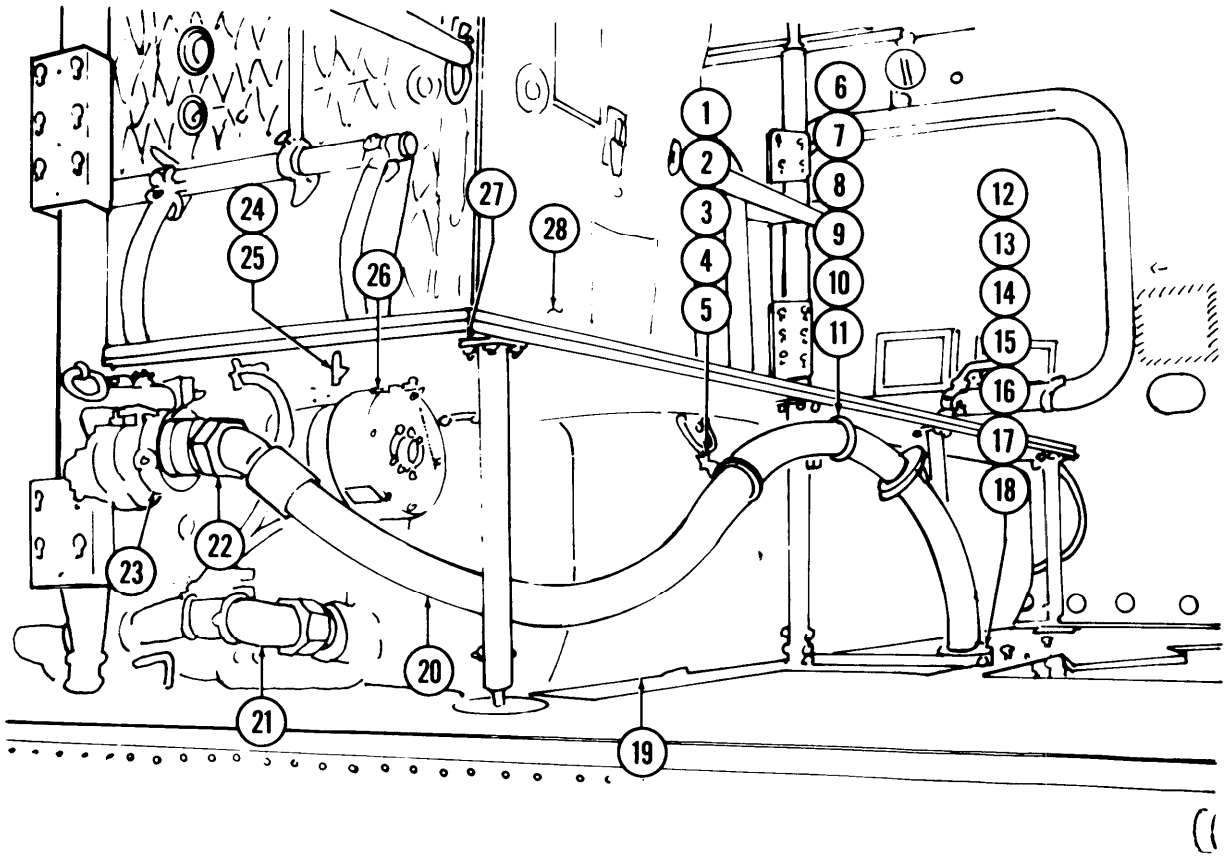

1. Clamp
2. Clamp
3. Screw
4. Washer
5. Nut
6. Clamp
7. Clamp
8. Bracket
9. Screw (2 reqd)
10. Washer (2 reqd)
11. Nut (2 reqd)
12. Clamp
13. Bracket
14. Screw
15. Screw
16. Washer (2 reqd)
17. Nut
18. Spacer
19. Oil Tank
20. Hose
21. Hose
22. Coupling
23. Coupling
24. Washer (4 reqd)
25. Bolt (4 reqd)
26. Pump
27. Screw (3 reqd, typical 4 places)
28. Seat

Figure 16-5. Oil Pump and Motor Installation

b. Remove clamps (1, 2, 6, and 7, figure 16-5) on pump inlet hose (20) and remove hose.

c. Remove pump (26) and motor assembly.

(1) Remove floor clamps (12) securing hoses and wiring harnesses and replace screws (15) in cabin floor.

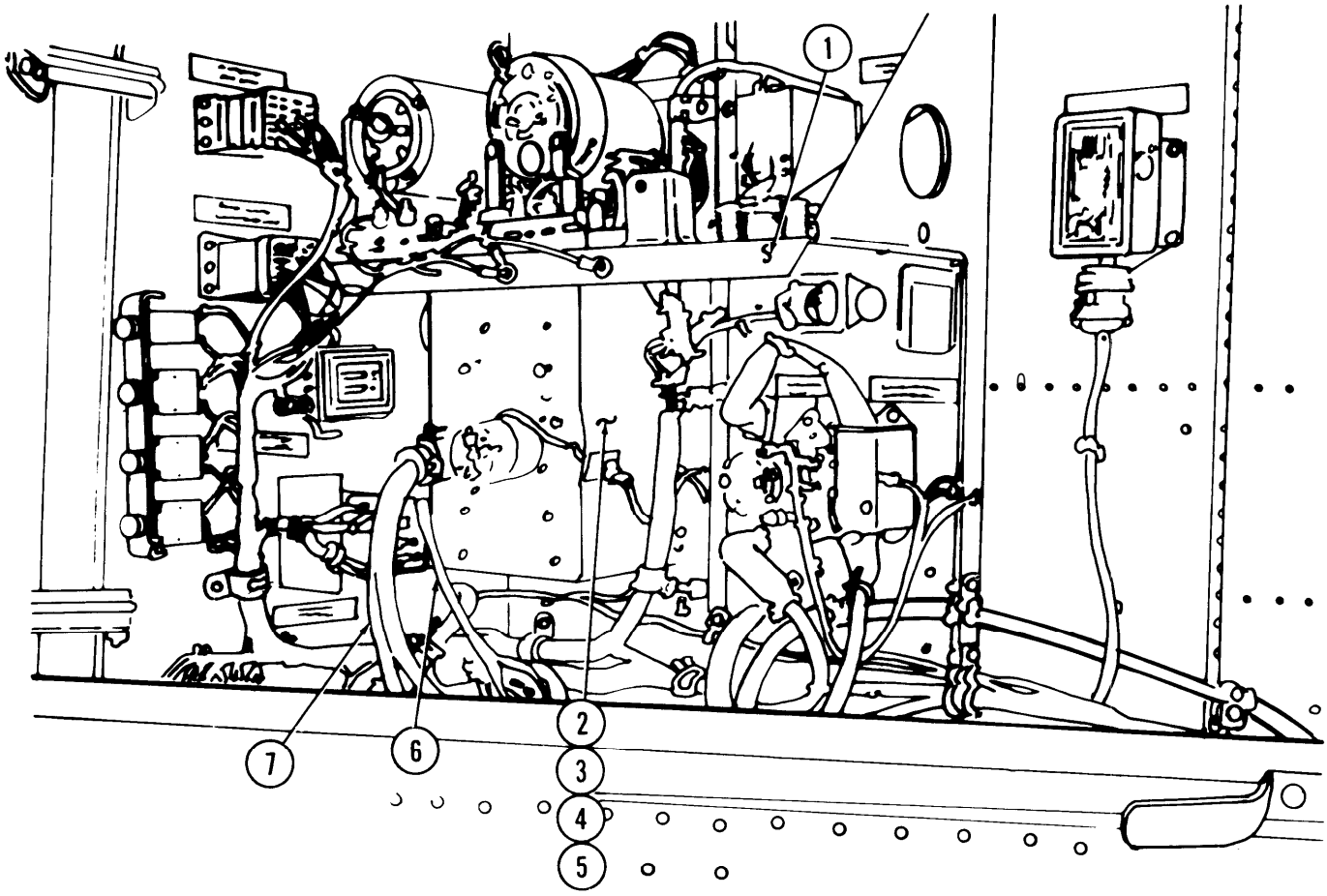

1. Shelf
2. Control box
3. Cover plate
4. Washer (4 reqd)
5. Bolt (4 reqd)
6. Cable
7. Cable

Figure 16-6. Control Box Installation

(2) Disconnect hoses (20 and 21) and wiring harness and remove from cabin floor.

(3) Remove pump (26) and motor attaching parts and remove pump and motor.

d. Remove quantity indicator and bracket; reinstall screws and washers.

e. Remove control box (2, figure 16-6).

(1) Disconnect cables (6 and 7).

(2) Remove attaching hardware.

(3) Remove control box (2)

f. Remove hose (9, figure 16-7) between nozzle ring (12) and tailpipe fairing.

g. Remove nozzle ring attaching parts and nozzle ring (12).

h. Remove vent hose clamps (1, figure 16-8) from cabin floor, disconnect and remove vent hose (10).

i. Unhook tank tiedown straps (3, figure 16-9) and remove oil tank.

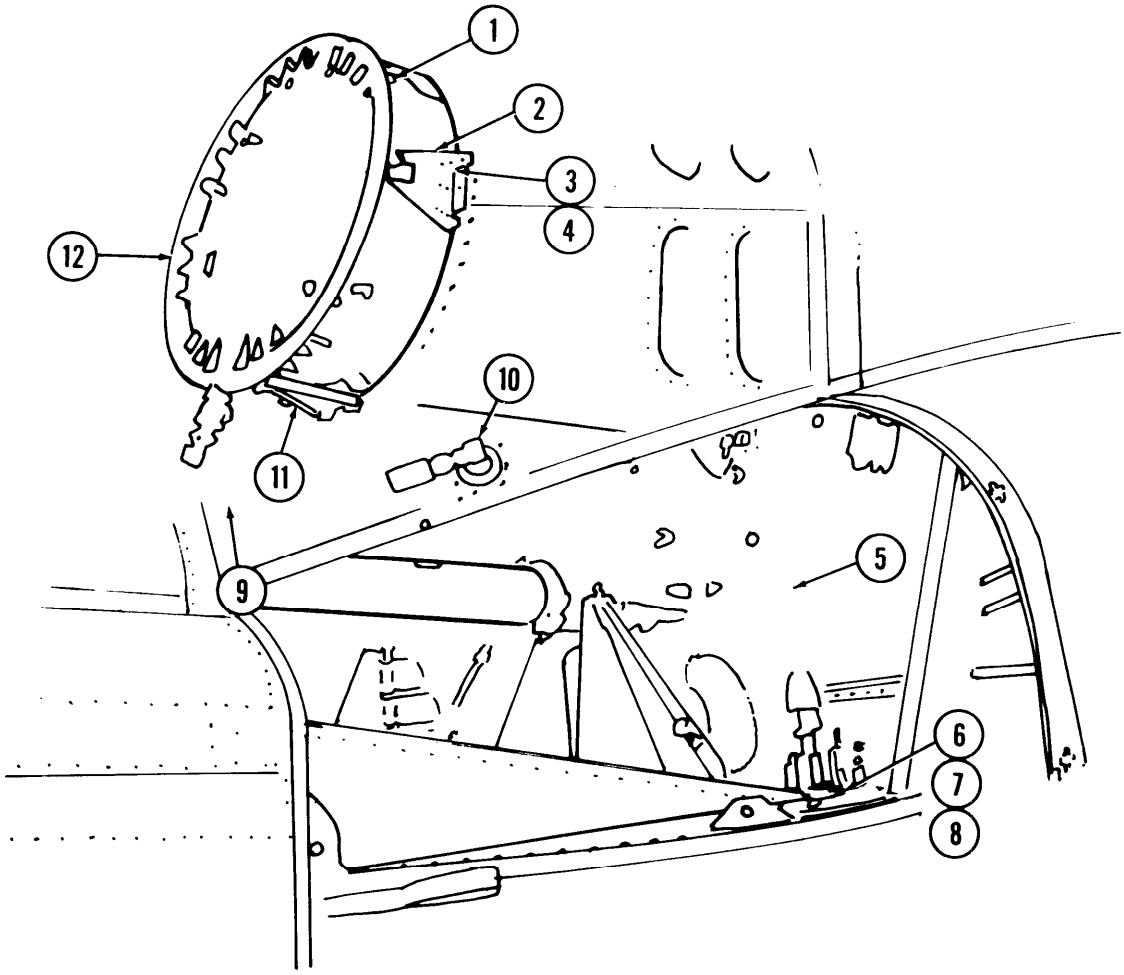

1. Bracket
2. Bracket right-hand
3. Bolt
4. Washer
5. Hose
6. Cover
7. Retainer
8. Coupling half
9. Hose
10. Bracket
11. Bracket left-hand
12. Nozzle ring

Figure 16-7. Nozzle Ring Bracket Installation

j. Release fasteners and remove passenger seat (8, figure 16-10).

k. Remove tank tiedown straps (3, figure 16-9).

l. Reinstall two-man seats and center seat (8, 16-10), Do not secure forward legs of center seat

m. Remove attaching bolts and remove door from cabin floor Install original door using existing hardware. Secure forward seat legs to floor fittings

n. Remove attaching bolts and washers (3, 4, figure 16-7), and remove brackets (2 and 11) from tailpipe fairing.

16-24. Inspection and Cleaning — Smoke Generating Subsystem. Aircraft shall be inspected for internal oil accumulation at the tailboom bulkheads. Any oil accumulation shall be removed. Tailboom of aircraft shall be washed after each day of smoke generating subsystem operation.

16-25. Installation — Smoke Generating Subsystem.

NOTE

Door (paragraph 16-23 m.) must be installed prior to tank installation.

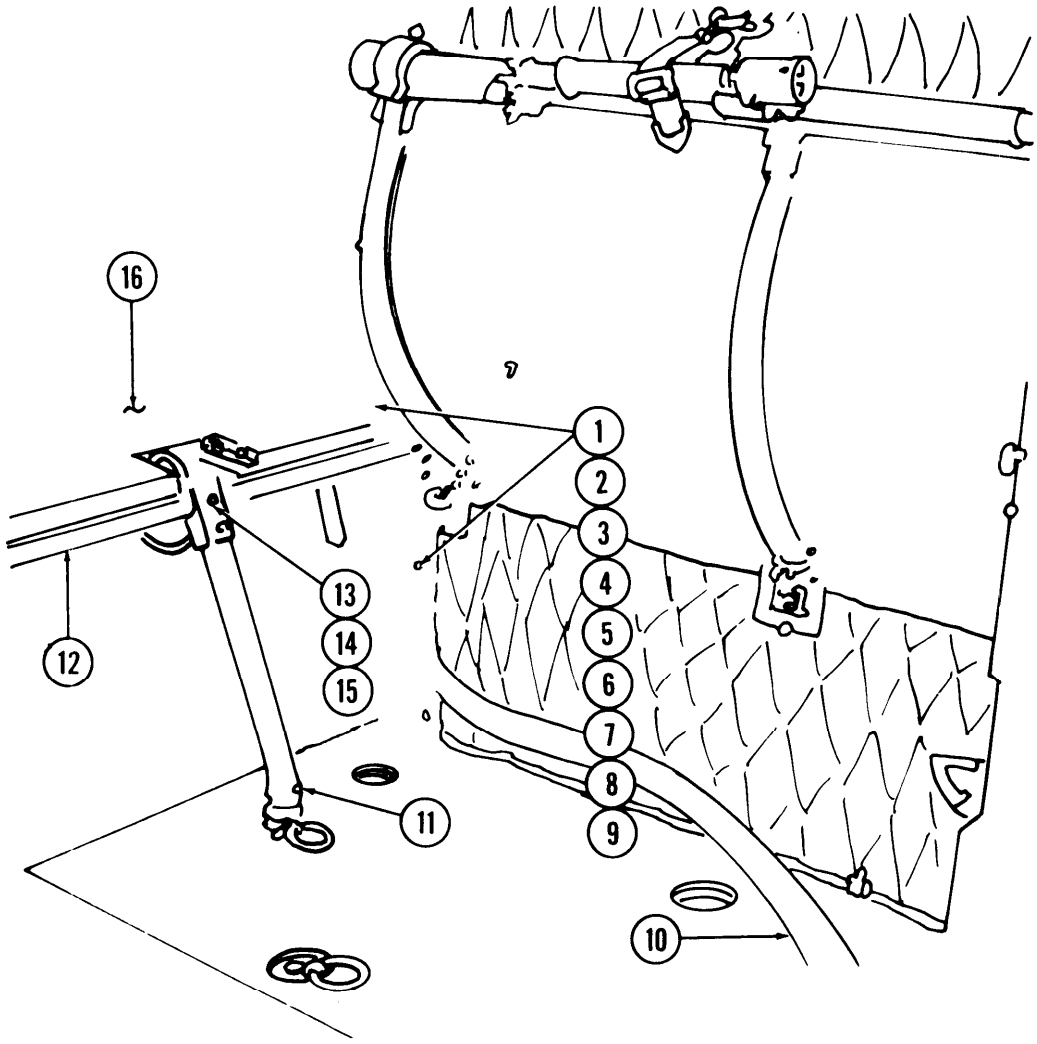

Figure 16-8. Vent Hose Installation (Sheet 1 of 2)

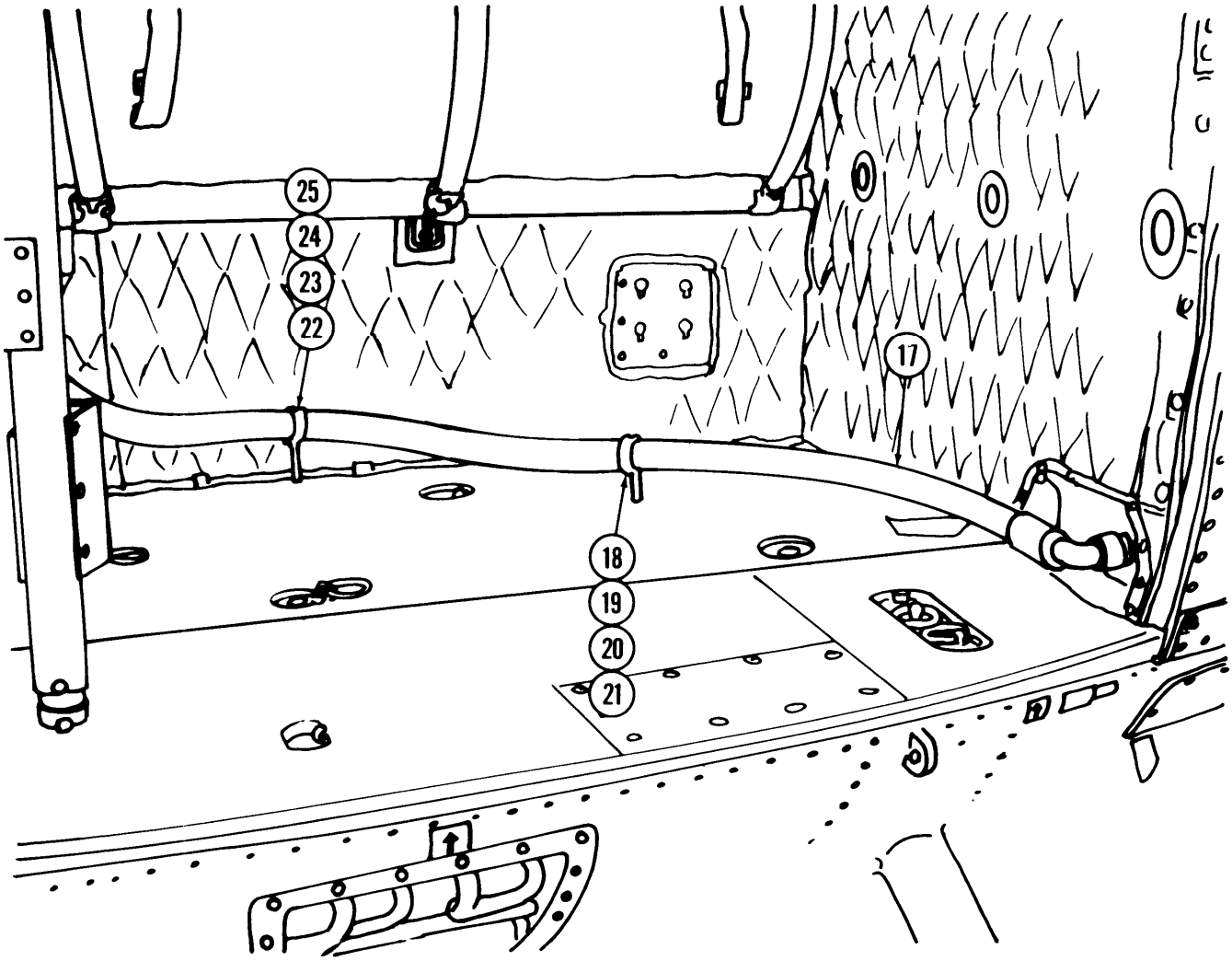

1. Clamp (2 reqd)
2. Bracket (2 reqd)
3. Bracket (2 reqd)
4. Bolt (2 reqd)
5. Washer (2 reqd)
6. Screw (4 reqd)
7. Spacer (2 reqd)
8. Washer (4 reqd)
9. Nut (4 reqd)
10. Hose
11. Leg
12. Tube
13. Screws (2 reqd)
14. Washer (2 reqd)
15. Nut (2 reqd)
16. Seat
17. Hose
18. Clamp
19. Bolt
20. Spacer
21. Washer
22. Washer
23. Spacer
24. Bolt
25. Clamp

Figure 16-8. Vent Hose Installation (sheet 2 of 2)

218-260 0 - 88 - 21

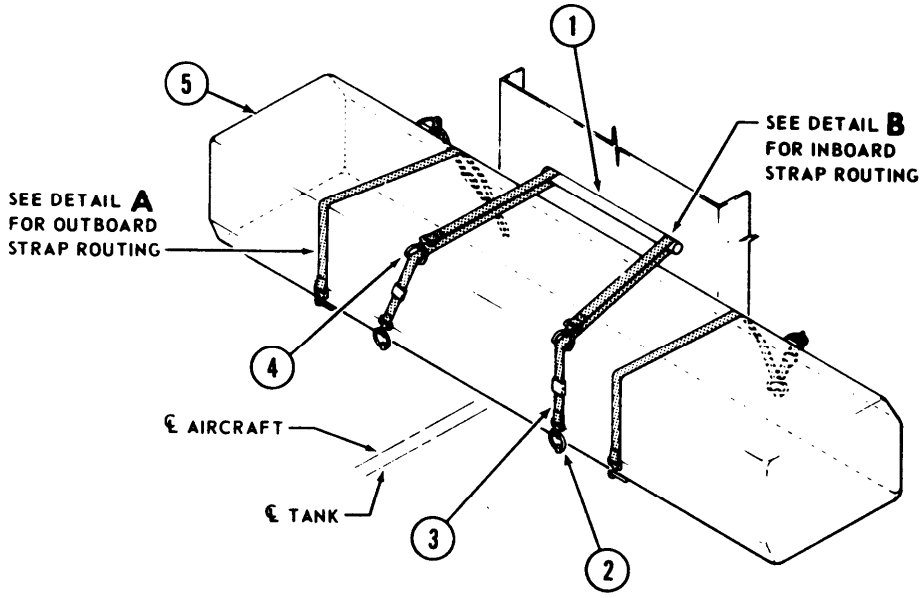

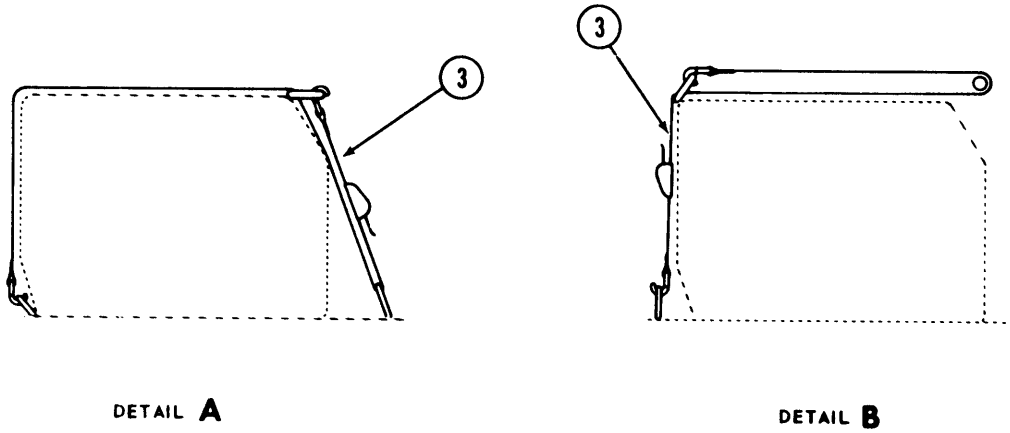

1. Tube assembly
2. Floor tiedown ring
3. Strap (4 reqd)
4. Tank tiedown ring
5. Oil tank

205706-47A

Figure 16-9. Oil Tank Installation

a. Position tank on cabin floor, centered **1.62** inches to left of aircraft centerline, on forward side of bulkhead, FS 128.00 (figure 16-9).

b. Install new passenger seat (figure 16-10) as follows:

NOTE

If the two aft legs (11, figure 16-8) cannot be installed on tube assembly (12, figure 16-8) because four rivet heads protrude near one end of the tube, rework tube as follows: Remove two rivets at fitting end. Clean up rivet holes with number 19 drill (0.166) diameter. Apply zinc chromate primer (C219) to bare surfaces. Slide legs over tube assembly and install two screws (13, figure 16-8), two washers (14), and two nuts (15). Torque nuts 7 TO 15 inch-pounds.

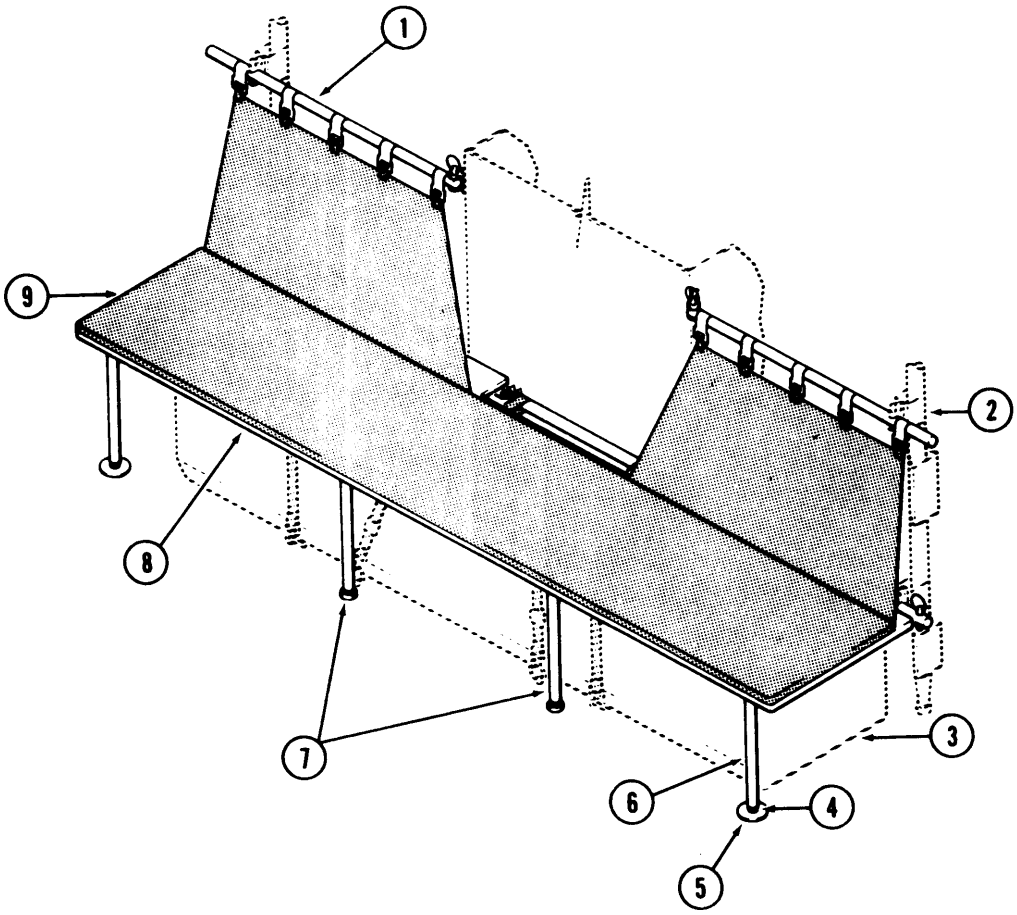

1. Tube (ref)
2. Stanchion (ref)
3. Oil tank
4. Nut (2 reqd)
5. Base (2 reqd)
6. Leg (2 reqd)
7. Leg (2 reqd)
8. Seat assembly
9. Cushion

205706-46A

Figure 16-10. Seat Installation

(1) Release attaching fasteners and remove the left and right two-man seats (16) across aft area of cabin. Leave upper seat back support tubes in place.

(2) Release attaching fasteners and remove center seat (8, figure 16-10). Slide out lower center tube and reinstall for reuse.

(3) Install two legs (6) on underside of seat at outboard forward corners, using six screws.

(4) Install nut (4) on each leg base (5) and screw base into insert in leg.

(5) Install legs (7) at the remaining positions on forward edge of seat, using six screws.

(6) Position seat in aircraft. Insert tubes on aft edge of seat into existing brackets on stanchions (2, figure 16-10) at aft cabin bulkhead. Secure with existing pins and latches and adjust clamps on seat tubes as necessary.

NOTE

Do not secure seat legs to the floor fittings until steps d. (6) through (11) have been accomplished.

(7) Secure aft legs (11, figure 16-8) of seat to floor fittings

(8) Secure forward inboard legs (7, figure 16-10) of seat to floor fittings.

(9) Adjust forward outboard leg bases (5) to fit snugly to floor. Tighten jamnut (4).

(10) Position cushion (9) on seat and tie cushion to tubes at aft edge of seat.

(11) Hook straps of seat backs to existing upper support tubes (1) and adjust as necessary.

c. Install brackets on tailpipe fairing as follows:

(1) Position brackets (2 and 11, figure 16-7) over nutplates.

(2) Secure each bracket (2 and 11) to fairing using two bolts (3) and washers (4).

d. Install oil tanks as follows:

(1) Remove center cover plate from bottom of tank. Remove shipping plug from cover plate.

(2) Install oil quantity transmitter to cover plate, using gasket and existing hardware. Position transmitter so that electrical connector will be toward right end of tank when installed.

(3) Reinstall cover plate on bottom of tank, using existing hardware.

(4) Install union in one end of adapter tube.

(5) Connect opposite end of adapter tube to fitting in bottom of tank.

(6) Raise tank approximately six (6) inches above cabin floor and temporarily block in this position using any suitable material near ends of tank.

(7) Connect 90 degree end of hose (20, figure 16-5) to union in adapter tube.

(8) Connect existing stowed electrical connector on wiring harness to connector of quantity transmitter in bottom of tank.

(9) Route hose forward and up through opening in floor; so that hose extends up through forward cutout in new door.

(10) Remove blocking and allow tank to rest on cabin floor.

(11) Secure oil tank to floor, as shown in figure 16-9, using four straps.

(12) Install one coupling (22, figure 16-5) in 45 degree end of hose (20).

(13) Secure hose to cabin floor, using bracket (13) spacer (18), screw (15), washer (16), clamp (12), screw (14), washer (16), and nut (17).

(14) Connect one end of vent hose (21) to top fitting toward left end of tank.

(15) Route hose (21) aft and outboard around left side of pylon island along cabin floor, to existing connector in bulkhead, FS 166.00. Connect elbow to connector in bulkhead.

(16) Secure vent hose as follows:

(a) Locate row of holes in outboard side of vertical angle at left forward corner of pylon island at **FS 128.00.**

(b) Secure hose (10, figure 16-8) at fourth hole up from floor, using bracket (2), washer (5), bolt (4), bracket (3), clamp (1), two screws (6), two washers (8), and two nuts (9).

(c) Secure hose at second hole up from floor, using bracket (2). washer (5), bolt (4), bracket (3), clamp (1), two screws (6), two washers (8), and two nuts (9).

(d) Locate inboard row of screws securing cabin floor between **FS 128.00** and **FS 166.00.**

(e) Remove screw approximately 12 inches aft of forward corner of island.

(f) Secure hose (10) at forward screw hole, using clamp (25), bolt (24), washer (22), and spacer (23).

(g) Remove screw and secure hose at aft screw hole (as shown) using clamp (18), bolt (19), washer (21), and spacer (20).

e. Install nozzle ring as follows:

(1) Position nozzle ring (12, figure 16-7) on brackets with inlet fitting at bottom and slightly to left of aircraft center line. Align bosses on nozzle ring with holes in brackets (2 and 11).

(2) Secure nozzle ring (12) to brackets (2 and 11), using four bolts (3) and four washers (4). Lockwire (C155) bolts to nozzle ring.

f. Install hoses (5) and (9) (figure 16-7) as follows:

(1) Loosen fasteners and remove lower right tailpipe fairing.

(2) Install elbow in hole in right side of upper tailpipe fairing using washer and nut. Do not tighten nut at this time.

(3) Connect 90 degree end of hose (9, figure 16-7) to nozzle ring.

(4) Connect opposite end of hose (9) to elbow in fairing. Position hose to prevent chafing on skin, and tighten nut on elbow.

(5) Install coupling half on straight end of hose.

(6) Connect 90 degree end of hose (5) to elbow in tailpipe fairing.

(7) Connect coupling half (8) on hose to coupling half in service deck. Using cover (6) and retainer (7).

(8) Install tailpipe lower fairing.

g. Install control box as follows:

(1) Open left aft electrical compartment doors.

(2) Remove attaching bolts (5, figure 16-6) and remove front cover of control box (2).

(3) Position control box shell (3) in forward inboard corner of electrical compartment, against left main beam web and near bulkhead, **FS 211.00,** under shelf (1).

(4) Secure control box to beam at existing nutplates, using four bolts (5) and four washers (4).

(5) Install control box front cover, using bolts and washers previously removed. Lockwire (C155) bolts.

(6) Locate large connector on existing cable (7). Install connector on control box.

(7) Locate small connector on existing cable (6). Install connector on control box.

(8) Lockwire (C155) connectors.

h. Install quantity indicator and bracket assembly as follows:

(1) Remove sixth and seventh screws outboard from center post, along top edge of right windshield.

(2) Position indicator and bracket and align with existing holes. Holes in bracket may be elongated, as necessary, to accommodate screw spacing.

(3) Secure bracket, using two screws and existing washers and nuts previously removed.

(4) Connect connector from wiring harness to back of quantity indicator.

i. Install pump and motor assembly as follows (figure 16-5):

(1) Assemble the following parts into each port of pump. Do not completety tighten nuts on unions.

(a) Install union with nut and packing in pump port.

(b) Install elbow with packing on union.

(c) Install coupling half (23, figure 16-5) with packing in elbow.

(2) Install pump (26) and motor under right end of seat, using four bolts (25) and four washers (24). Do not tighten aft outboard bolt at this time.

(3) Position elbows as shown and tighten all pump fittings.

j. Install hose (6, figure 16-11) and cable (17) as follows:

(1) Install connector on cable (17) to connector in right side of bulkhead **F.S. 166.00.**

(2) Route wires inboard and forward under two man seat, to pump motor.

(3) Connect wire number P111B4 to terminal on pump motor.

(4) Remove aft outboard pump mounting bolt and secure wire number P112B4 to pump base with pump mounting bolt.

(5) Install union (22) in one end of hose (6).

(6) Install elbow (20) with packing (21) on union (22).

(7) Install coupling half (18) with packing (19) in elbow (20).

(8) Install coupling half (22) in opposite end of hose.

(9) Connect end of hose with elbow installed in bottom (outlet) port of pump.

(10) Route hose inboard and aft to coupling in bulkhead, **F.S. 166.00.** Connect hose to coupling.

(11) Remove one screw from cabin floor aft of pump. Secure hose and wiring harness at screw hose.

(12) Remove one screw from near inboard end of row of screws approximately 10 inches forward of bulkhead, **F.S. 166.00.** Secure hose and wiring harness at screw hole.

(13) Secure hose and wiring harness approximately midway between aft connector and aft floor attach point.

(14) Secure hose and wiring harness approximately midway between the two floor attach points.

k. Install switch (U6374) as follows:

(1) Locate small electrical connector in cabin roof outboard and aft of right overhead console.

(2) Install connector on switch cord to connector in roof.

(3) Stow switch in spring clip located in cabin roof approximately two inches aft of overhead console.

l. Complete pump inlet hose installation as follows (figure 16-5):

(1) Route hose (20, figure 16-5) which extends up from center of floor forward of oil tank (19), outboard to the right along forward edge of tank, to pump (26). Connect coupling (22) on hose, to coupling (23) on upper (inlet) pump port.

(2) Secure hose to forward inboard seat leg and DEE ring in tank.

16-26. Servicing -- Smoke Generating Sub-system Tank. a. Perform the following procedures before servicing the tank:

(1) Inspect all supports and tighten if necessary.

(2) Inspect nozzle ring and nozzles for looseness or missing nozzles.

(3) Depress the tank level fog oil circuit breaker in the overhead panel and observe the oil level gage in the cockpit.

b. If the oil level gage indicates less than full, fill oil tank as follows:

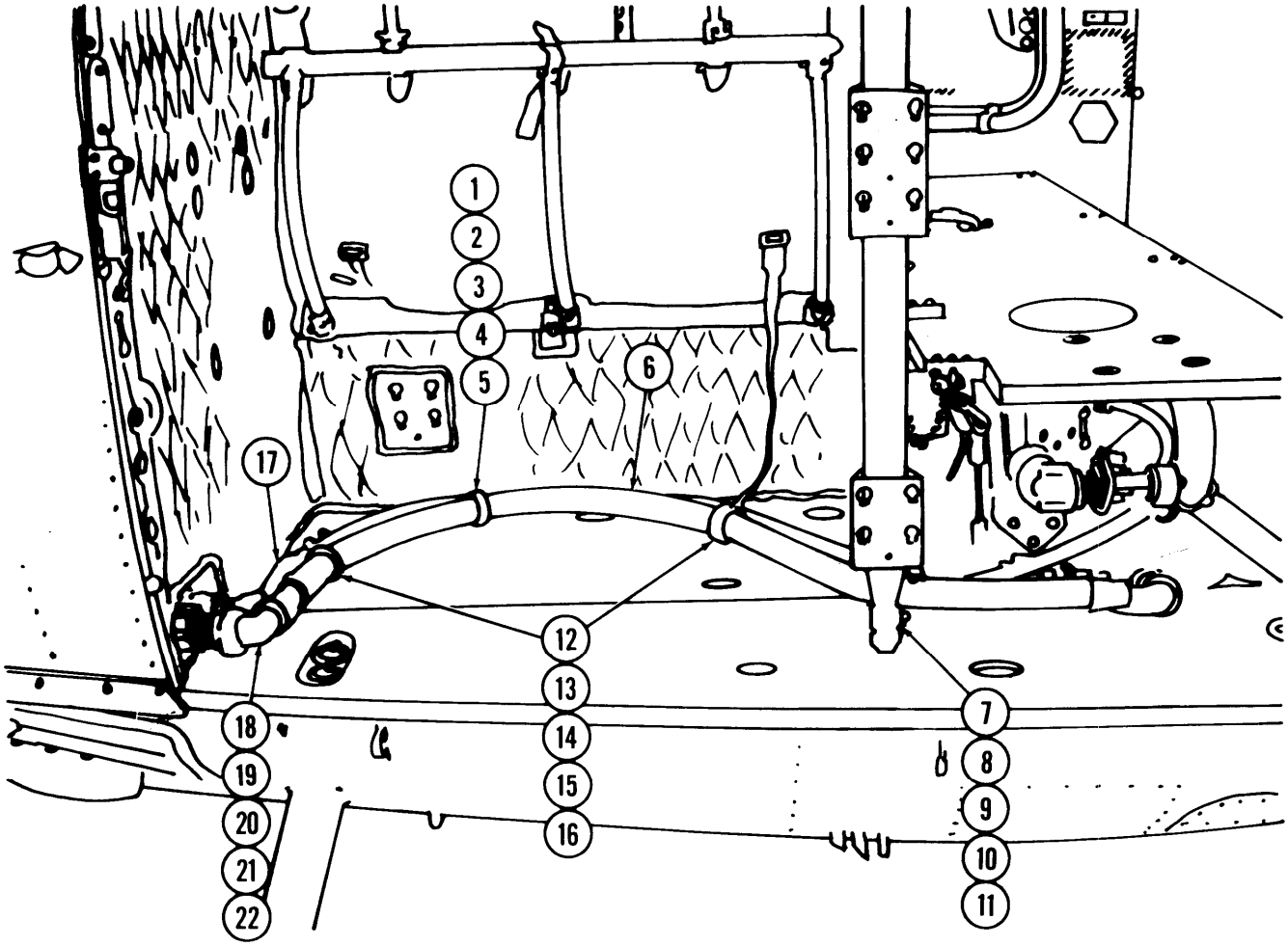

1. Clamp
2. Clamp
3. Screw
4. Washer
5. Spacer
6. Hose
7. Clamp
8. Clamp
9. Screw
10. Washer
11. Spacer
12. Clamp (2 reqd)
13. Clamp (2 reqd)
14. Screw (2 reqd)
15. Washer (2 reqd)
16. Nut (2 reqd)
17. Cable
18. Coupling half
19. Packing
20. Elbow
21. Packing
22. Union

Figure 16-11. House and Wiring Assemblies

WARNING

Do not use any alternate fluids in the oil tank. The prescribed fluid is fog oil (C191).

(1) Disconnect the hoses from the inlet and outlet ports on the pump and motor assembly.

(2) Remove the quick disconnect fitting from the dip tube, insert strainer (Part No. U6697) into the flared end of the dip tube and replace the fitting on the tube.

(3) Connect one end of the filling hose to the IN (inlet) port of the pump and motor assembly. Connect the other end of this hose to the dip tube, then insert the dip tube into the fog oil shipping drum.

(4) Connect the hose from the oil tank to the OUT (outlet) port of the pump and motor assembly.

WARNING

Keep personnel clear of vent located on the left underside of the helicopter during filling operation. If the oil tank is overfilled, excess fog oil will spill from the vent.

(5) Depress SMOKE GEN PUMP CONT circuit breaker. Depress operating switch push button and observe oil level guage as pump and motor assembly operate. When guage indicates F (full), release push button.

NOTE

The oil tank holds approximately 50.0 gallons of fog oil (C191).

(6) Open the circuit breakers.

(7) Disconnect filling hose from IN (inlet) port of pump and motor assembly and from fog oil shipping drum.

(8) Disconnect the hose from the OUT (outlet) port of the pump and motor assembly and connect it to the IN (inlet) port.

(9) Connect pump to bulkhead hose assembly to OUT (outlet) port of pump and motor assembly.

c. Perform the following procedures after servicing the tank:

(1) Open circuit breakers in overhead panel.

(2) Check oil tank and hose connections for leaks, A grazing 0.50 caliber or larger round may result in a non-self-sealing leak in the oil tank.

16-27. ARMAMENT SUBSYSTEM 7.62MM MACHINE GUN M23.

16-28. Description — Armament Subsystem 7.62MM Machine Gun M23. The armament subsystem M23 is attached to external stores hard point fittings on both sides of the helicopter (figure 16-12). The two flexible 7.62 millimeter machine guns M60D (figure 16-13) are free pointing but limited in azimuth, elevation, and depression by cam surfaces and stops on pintles and pintle post assemblies of the two mount assemblies on which the M60D machine guns are mounted. An ejection control bag is latched to the right side of each M60D

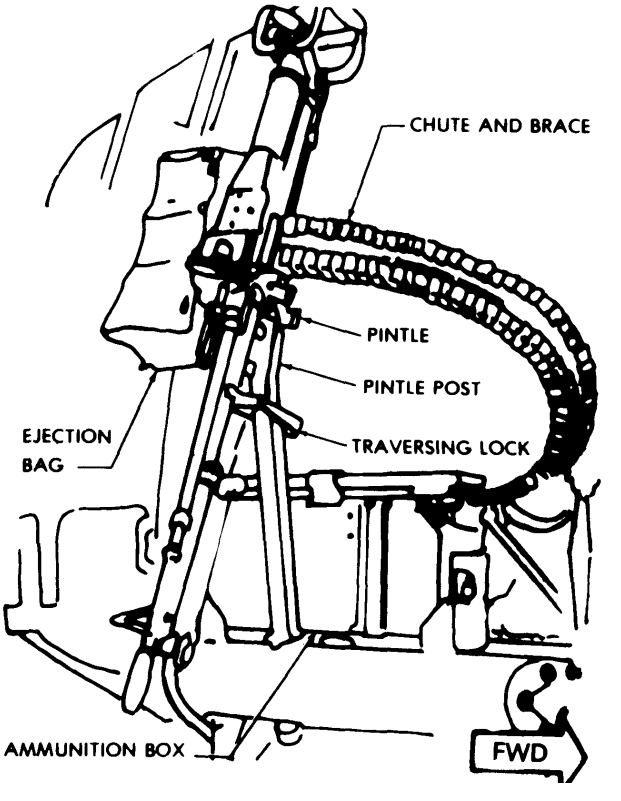

Figure 16-12. Armament Subsystem M23, Machine Gun M60D in Stowed Position, RS

machine gun to hold the spent cases and links. Cartridges travel from ammunition box and cover assemblies to M60D machine gun through flexible chute and brace assemblies.

16-29. Removal — Armament Subsystem 7.62MM Machine Gun M23. Dismantle the subsystem only to the point required for removal and retain mounting hardware to prevent loss. Removal procedures are-for the (right-left) gun assembly.

WARNING

Unload machine gun prior to removal. Refer to TM 9-1005-262-14.

a. Ammunition Chuting and Accessories (figure 16-14).

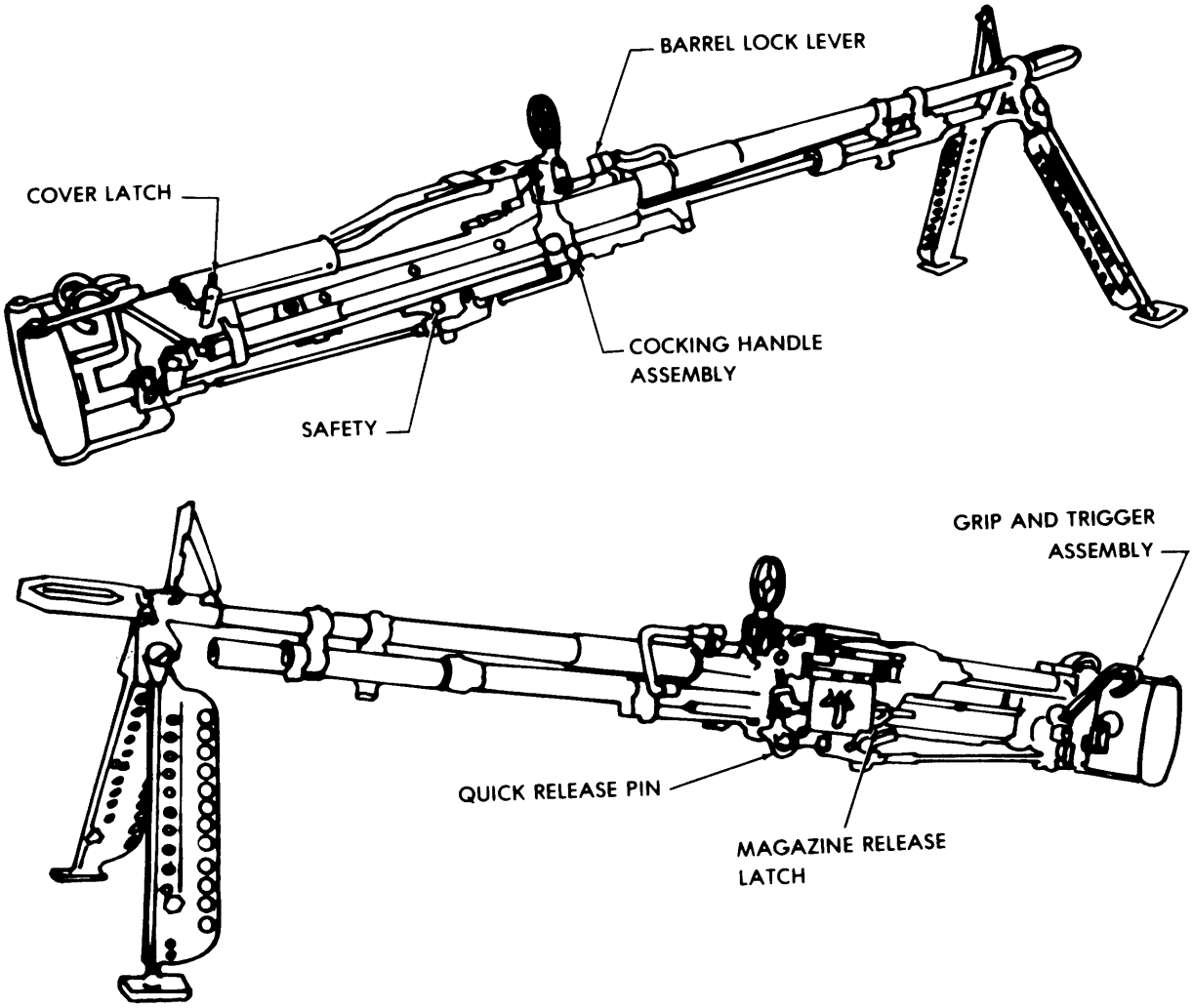

Figure 16-13. 7.62 Millimeter Machine Gun M60D - Right Rear and Left Front Views

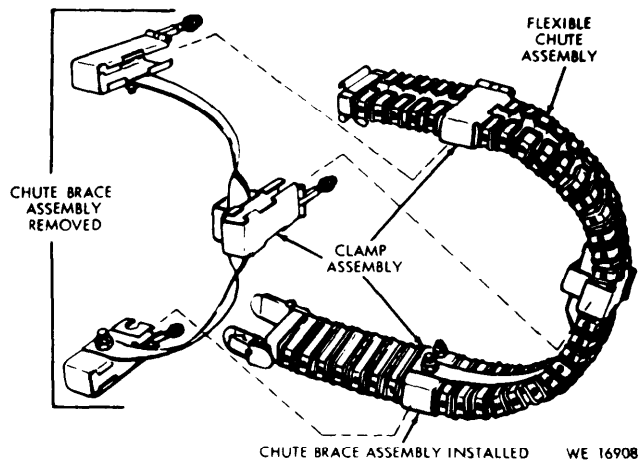

Figure 16-14. Installation or Removal of Brace Assembly or Chute Assembly

(1) Remove gun from traversing lock (figure 16-12).

(2) Remove ammunition chute assembly and accessories from gun and ammunition box (figure 16-15).

b. Ejection Bag (figure 16-16).

(1) Depress latch lever to unlock ejection bag and separate rear bracket from the mounting plate at the bottom of the receiver (figure 16-17).

(2) Depress rear bracket safety latch lever, slide bag brackets on mounting points and plate, and separate bag mounting points from gun adapter.

c. Machine Gun and Adapter (figure 16-18).

(1) Remove quick release pin to release gun and adapter from pintle.

(2) Lift gun to separate gun from the pintle and pintle post.

d. Mount Assembly.

(1) Unlatch and lift ammunition box and cover assembly from tube assembly brackets (figure 16-19).

(2) Remove cotter pin and plain round nut from pintle post; lift the pintle post assembly from the tube assembly (figure 16-20).

(3) Remove cotter pin, nut, washer, and bolt from the upper and lower clevis portions of each beam; remove beam-tube assembly.

(4) Cut and remove lockwire from the socket head cap screws from each mounting beam, remove six cap screws and washers, and remove the mounting beams from the base tube assembly.

16-30. Maintenance and Repair -– Armament Subsystem 7.62MM Machine Gun M23. Refer to TM 9-1005-262-14.

16-31. Installation — Armament Subsystem 7.62MM Machine Gun M23. a. Mount Assembly M23.

(1) Assemble one mount assembly for installation on right side of aircraft and one for installation on left side.

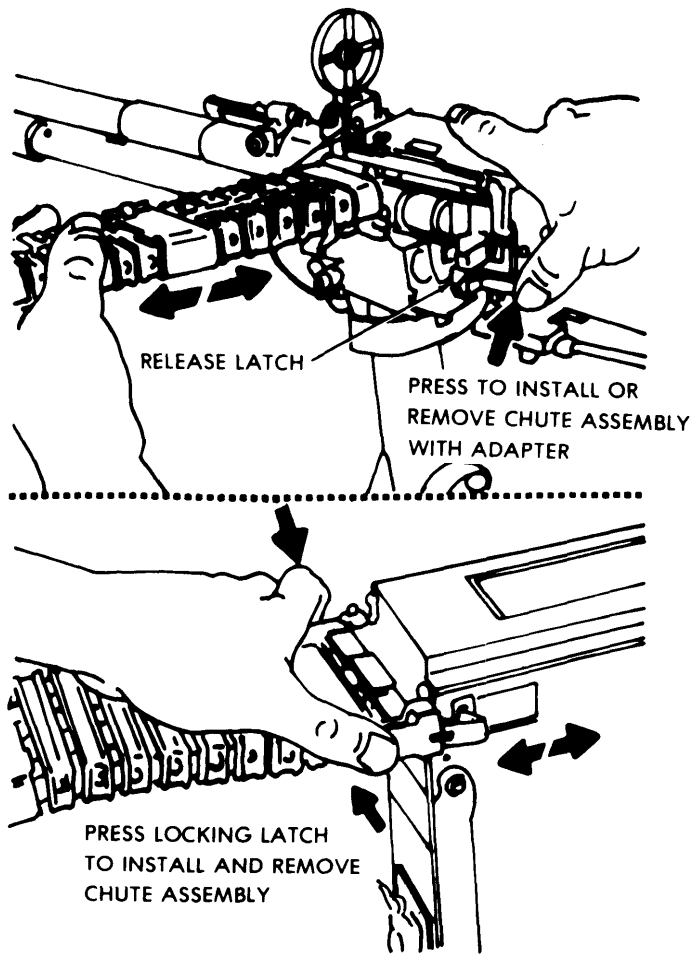

Figure 16-15. Chute Assembly on Machine Gun M60D and Ammunition Box and Cover Assembly

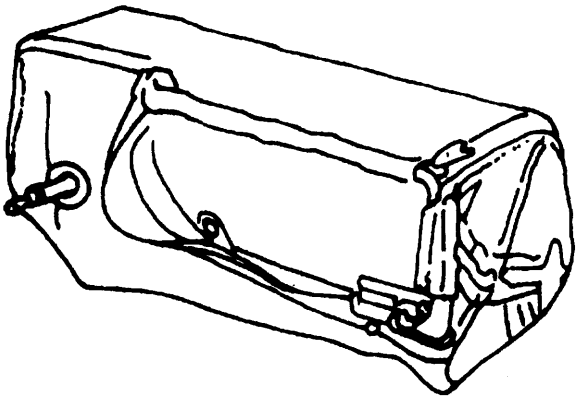

Figure 16-16. Ejection Bag

NOTE

The mount assemblies installed on the right side and left side of UH-1 helicopters for this subsystem are composed of identical parts. The base tube assembly is marked to aid in installation. Near one end, one side is stamped TOP FRONT FOR RH ASSY and the opposite side is stamped TOP FRONT FOR LH ASSY

(2) To assemble right hand mount assembly mounting components refer to figure 16-20 and proceed as follows:

(a) Position tube assembly for right hand mounting.

(b) Position forward and aft beams to tube assembly with clevis-like ends inboard.

NOTE

Although similar in appearance, the forward and aft beams are not interchangeable. The aft beam is the longer and bulkier.

(c) Attach beams to tube assembly with these 3/8-24 x 1 1/2 cap screws and three washers on each end. Lock (C155) the screws.

NOTE

The pintle post assembly is inserted through the opening in the tube assembly which has recesses to receive the locating bosses on pintle post collar. The pintle post assembly is positioned so that traversing lock is outboard.

(d) Insert pintle post assembly through tube assembly and secure with nut and cotter pin.

(3) To assemble left hand mount assembly mounting components (figure 16-21), position tube assembly accordingly and follow steps (a) through (d) in a. (2) of this paragraph.

(4) Install left hand mount assembly as follows:

(a) Position ends of forward and aft beams on helicopter lower hard points as shown in figure 16-21.

(b) Secure each beam to bracket with 1/4-28 x 1-21/32 clevis bolt, washer, and nut. Ensure bolt heads are toward front of helicopter.

(c) Lock each nut in place on bolt with cotter pin.

(d) Raise mount assembly until other beam mounting points mate with helicopter upper hard point fittings.

(e) Secure each beam to bracket with 1/4-28 x 1-21/32 clevis bolt, washer, and nut. Ensure bolt heads are toward front of helicopter.

(f) Lock each nut in place on bolt with cotter pin.

(5) To install right hand components, position accordingly and repeat steps (a) through (f) above.

b. Ammunition Box and Cover Assembly.

(1) Install box in brackets on tube assembly (figure 16-19) with loading instructions decal facing inboard.

(2) Secure box in brackets with latch on each end of box.

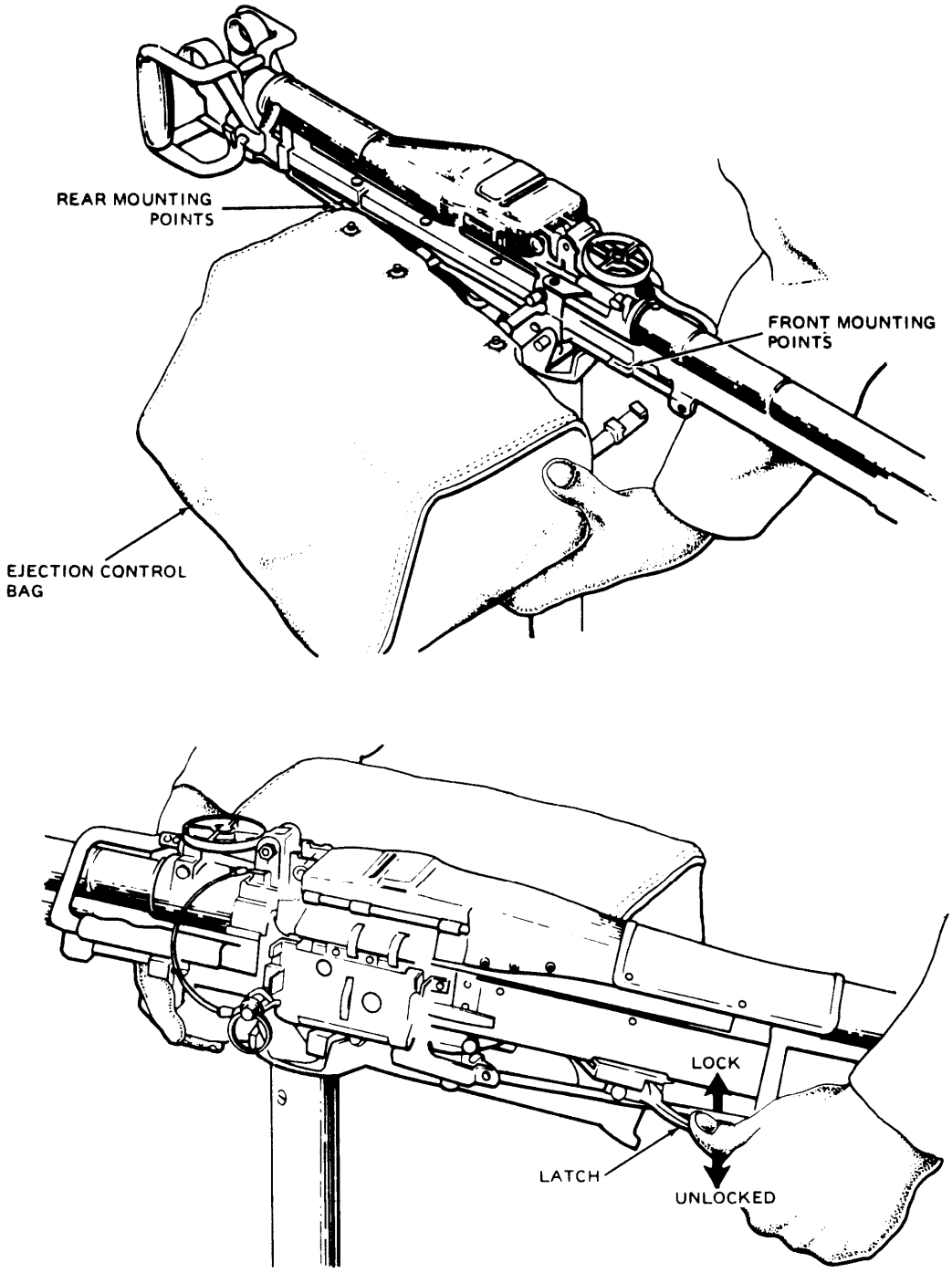

Figure 16-17. Ejection Bag Removal and Installation

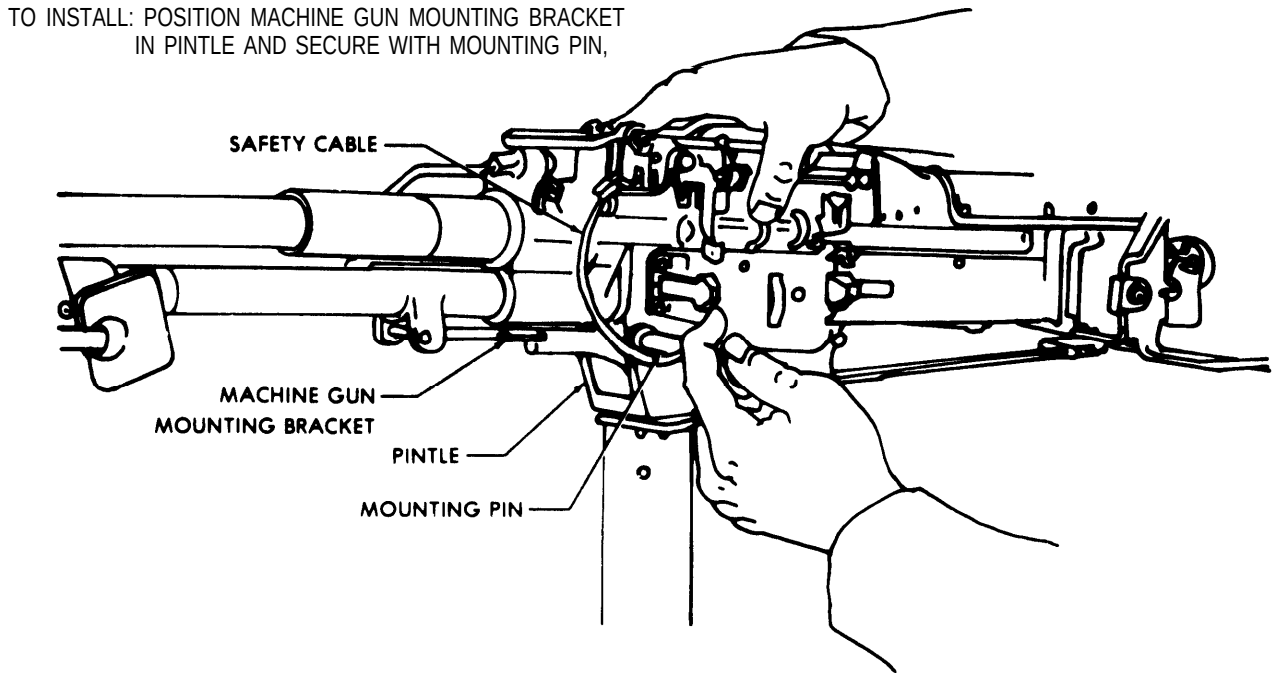

Figure 16-18. Machine Gun M60D Position on Pintle — Left Side View

c. Machine Guns M60D.

(1) Install one machinegun M60D on the rlght hand and one on the left hand mount assemblies.

(a) Refer to figure 16-18 and position gun adapter into right hand mount.

(b) Secure gun to pintle with quick release pin.

(c) Install gun on left hand mount assembly plntle as in steps (a) and (b) above.

(2) Check that each gun moves freely in azimuth and can be depressed to traversing lock (figure 16-12).

d. Ejection Bag (figure 16-16).

(1) Install an ejection bag on each gun.

(a) Refer to figure 16-17 and poslt1on bag on right of gun on right hand mount assembly.

(b) Position forward arm bracket of bag in front of matching forward mounting points on gun adapter. At the same time, press down on rear bracket. safety latch lever. Slide bag brackets aft on mounting points and plate.

(c) Position rear bracket of bag behind mounting plate on bottom of receiver.

(d) Release latch lever to lock bag in place.

(e) See that bag is securely attached to gun.

(2) Install bag on gun on left hand mount assembly as in steps (a) through (e) above.

e. Ammunition Chuting and Accessories (figure 16-14).

(1) Refer to figure 16-15 and install ammunition chuting and accessories on each mount assembly.

(2) Ensure chuting is securely attached to gun and ammunition box.

NOTE

Tighten nuts on clamp assemblies to snug and tighten another quarter turn. Do not tighten these nuts so much the ammunition flow is restricted.

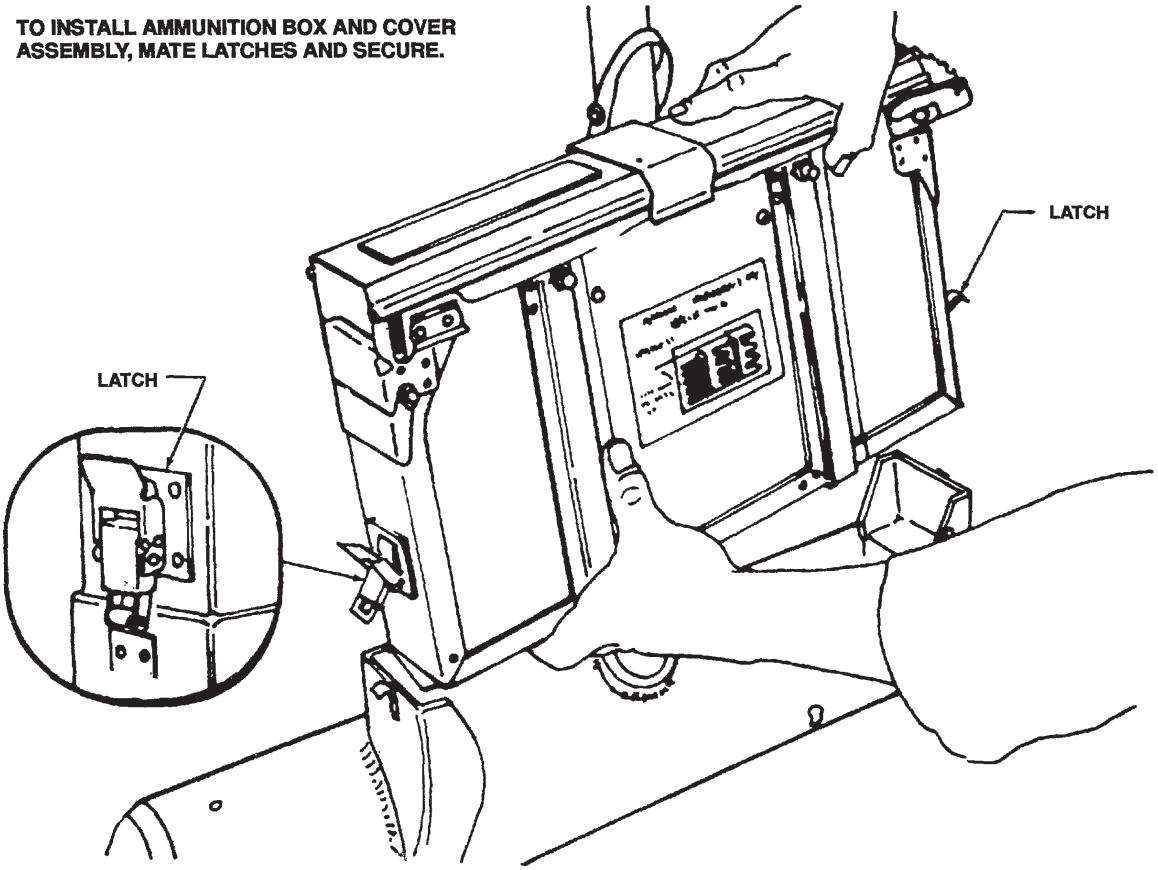

Figure 16-19. Ammunition Box and Cover Assembly—Removal

(3) Check that chuting flexes without binding through all movements of gun.

(4) Stow gun in traversing lock.

16-32. ARMAMENT SUBSYSTEM - M59.

16-33. Description — Armament Subsystem — M59. Armament subsystem M59 consists basically of the major components of armament subsystem M23 (refer to TM 9-1005-262-15) and the following major components: a modified caliber .50 machine gun XM213, an ammunition tray assembly, a bag and frame assembly, a cradle assembly, a brass deflector assembly, a pintle post assembly, two armament subsystem M59 identification plates, and miscellaneous attaching hardware. Armament subsystem M59 is designed for application to UH-1H helicopters. One 7.62 millimeter machine gun M60D, mounted on its pintle post assembly, is installed on one side of the helicopter; one caliber .50 machine gun XM213 mounted on its pintle post assembly (figure 16-22) is installed on the other side of the helicopter. The base tube assemblies are interchangeable, allowing for installation of machine gun M60D or machine gun XM213 on either side of the helicopter. The guns are centrally positioned above the cargo deck of the helicopter and are manually operated by an operator/crew gunner. The guns can be elevated, depressed, or traversed within specified limits. One forward beam, one aft beam, and one base tube assembly (parts of subsystem M23 mount assembly) are utilized when installing the caliber .50 machine gun XM213 portion of armament subsystem M59 (figure 16-23). For a description of the main components of the 7.62 millimeter machine gun M60D portion of armament subsystem M59, refer to TM 9-1005-262-15.

WARNING

Unload machine gun prior to removal (TM 9-1005-304-12).

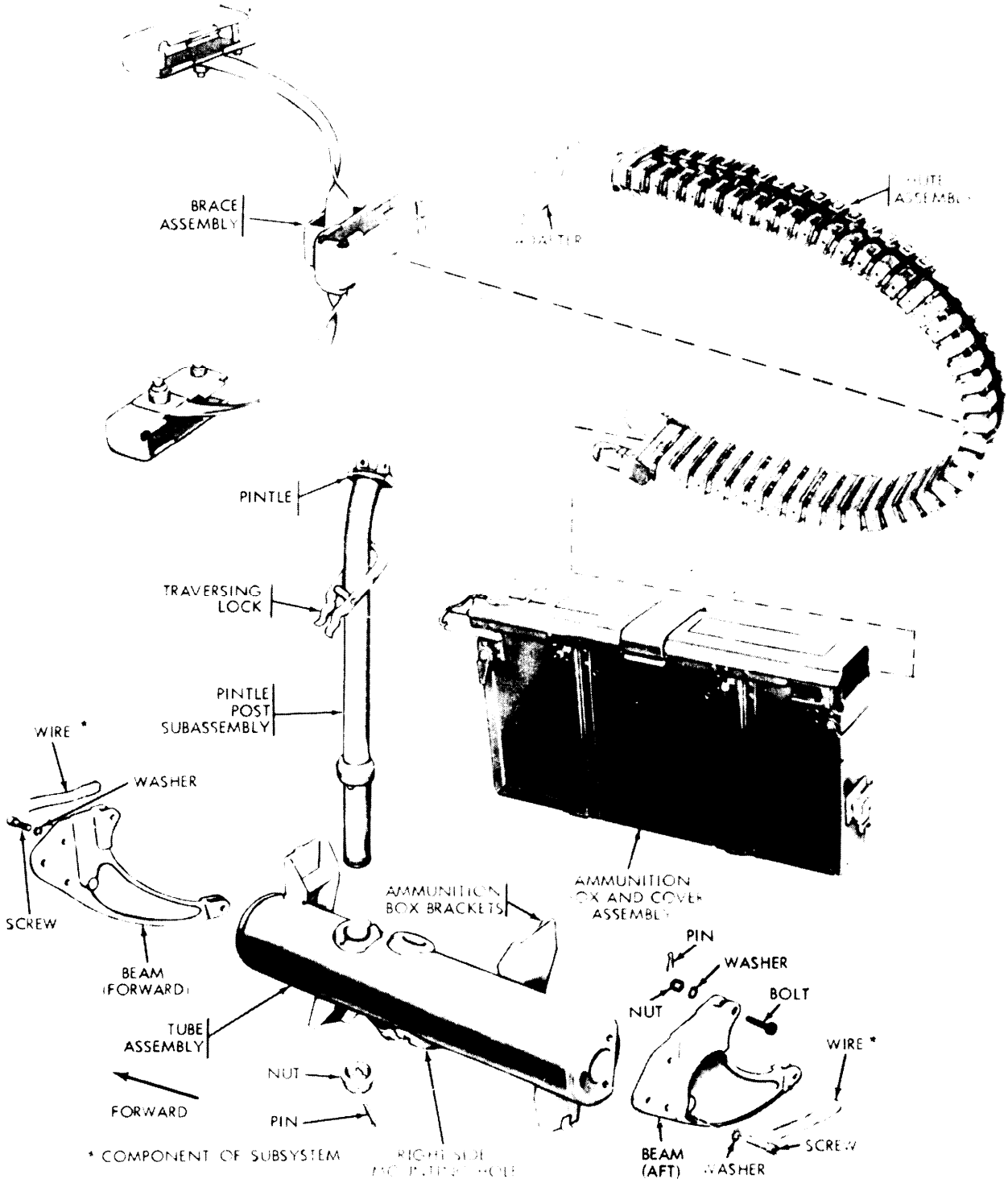

Figure 16-20. Armament Subsystem M23 Mount Assembly — Exploded View

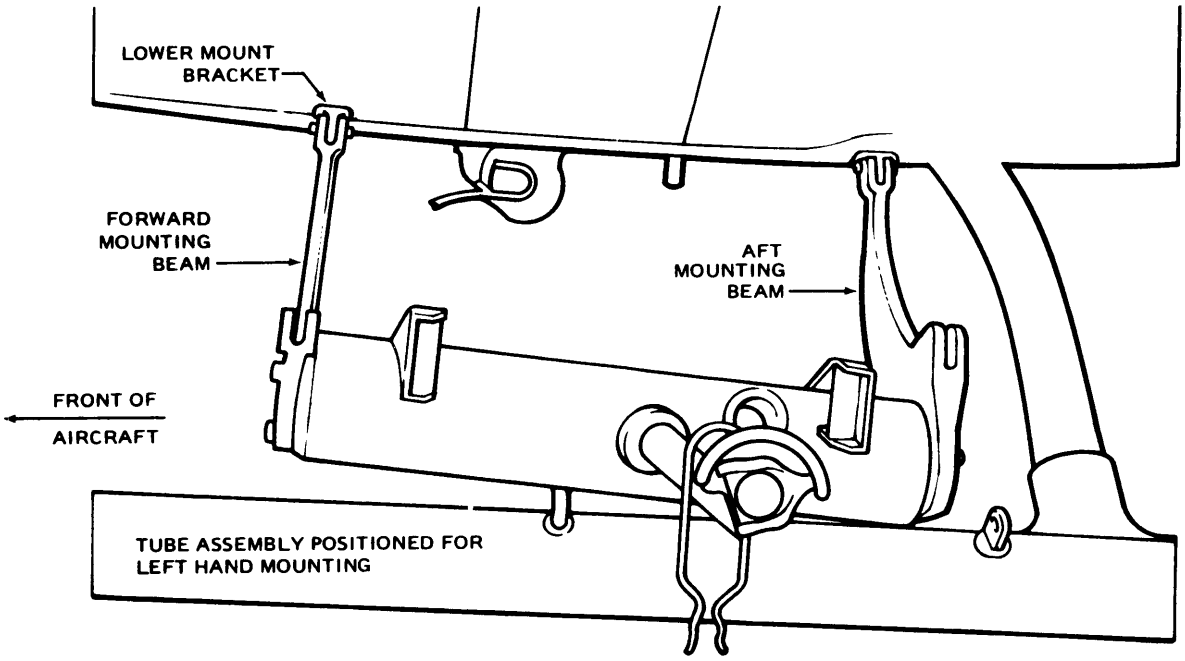

FORWARD AND AFT MOUNTING BEAMS - LOWER MOUNT BRACKETS

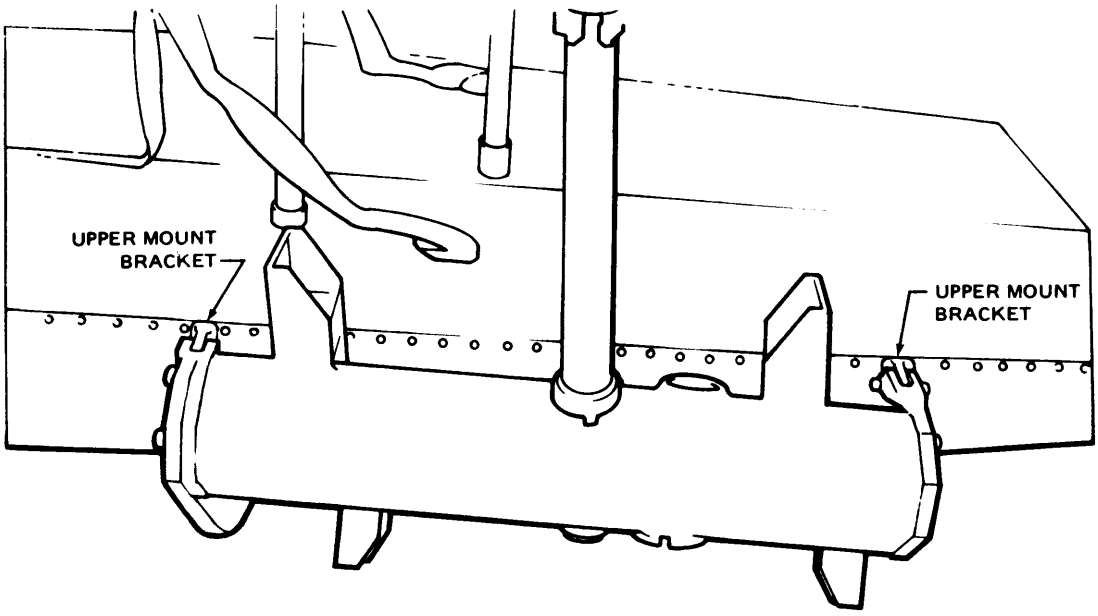

MOUNTING BEAMS - UPPER MOUNT BRACKETS

Figure 16-21. Armament Subsystem M23 Mount — Left Side

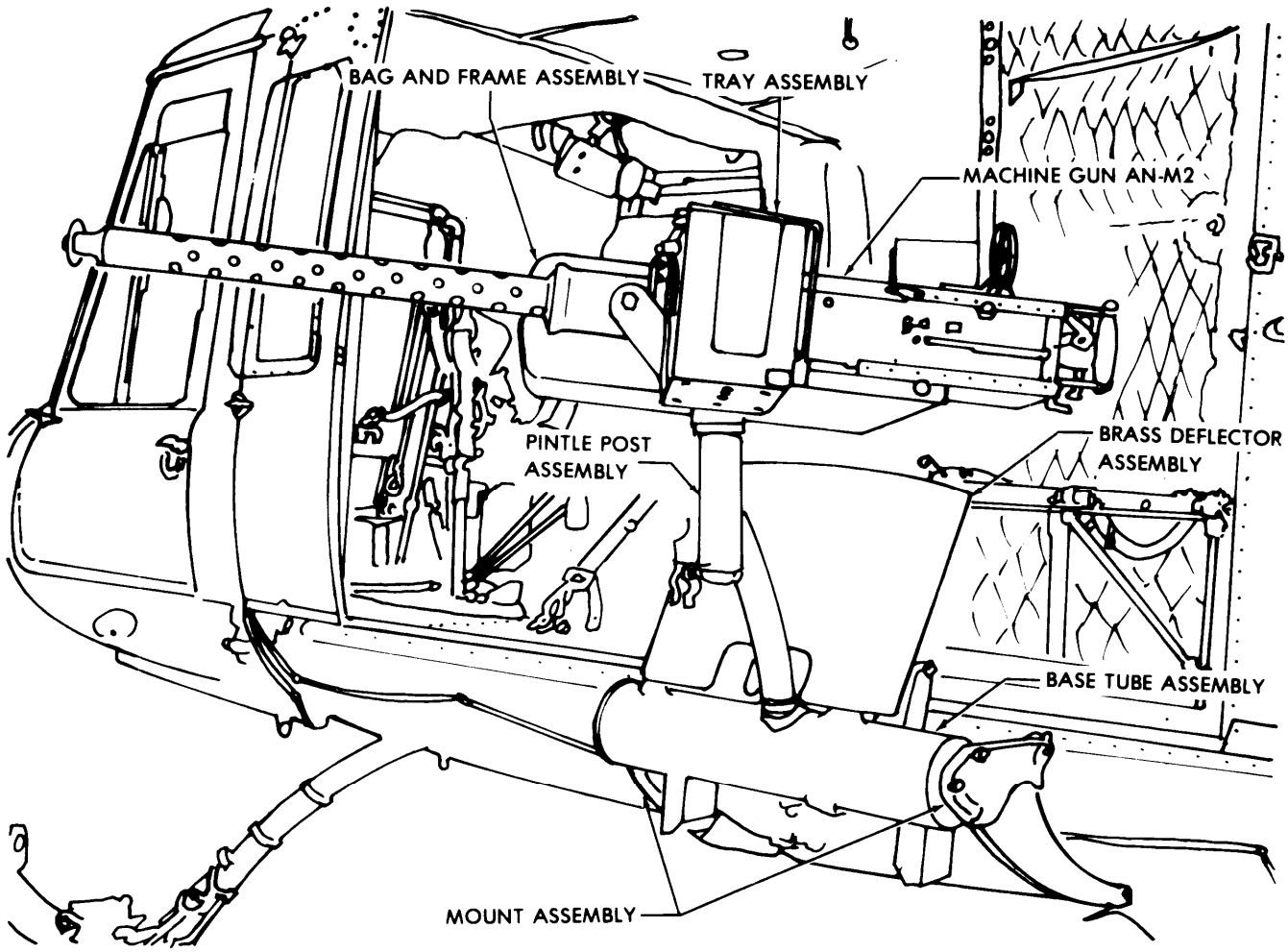

Figure 16-22. Caliber .50 Machine Gun XM213

16-34. Removal — Armament Subsystem — M59. Disassemble this equipment only to the point required to perform the removal procedures and retain all mounting hardware as necessary to prevent loss.

a. Ammunition tray assembly. Depress the latch lever on the left side of cradle assembly and lift the tray assembly until the V-portion of the tray clears the V-slots in the block of the cradle assembly bracket as shown in figure 16-24.

b. Bag and frame assembly. Depress the latch lever on the right side of the cradle assembly and lift the bag and frame assembly until the V-portion of the frame clears the V-slots in the block of the cradle assembly bracket as shown in figure 16-25.

c. Machine Gun .50 Caliber XM213.

(1) Remove cotter pin, two washers, and headed straight pin (figure 16-23), to release the gun receiver assembly from the aft end of the cradle assembly as shown in figure 16-26.

(2) Remove lockwlre and the two bolts used to secure the machine gun to the cradle assembly.

CAUTION

Closely follow the instructions for gun-cradle separation to avoid component damage.

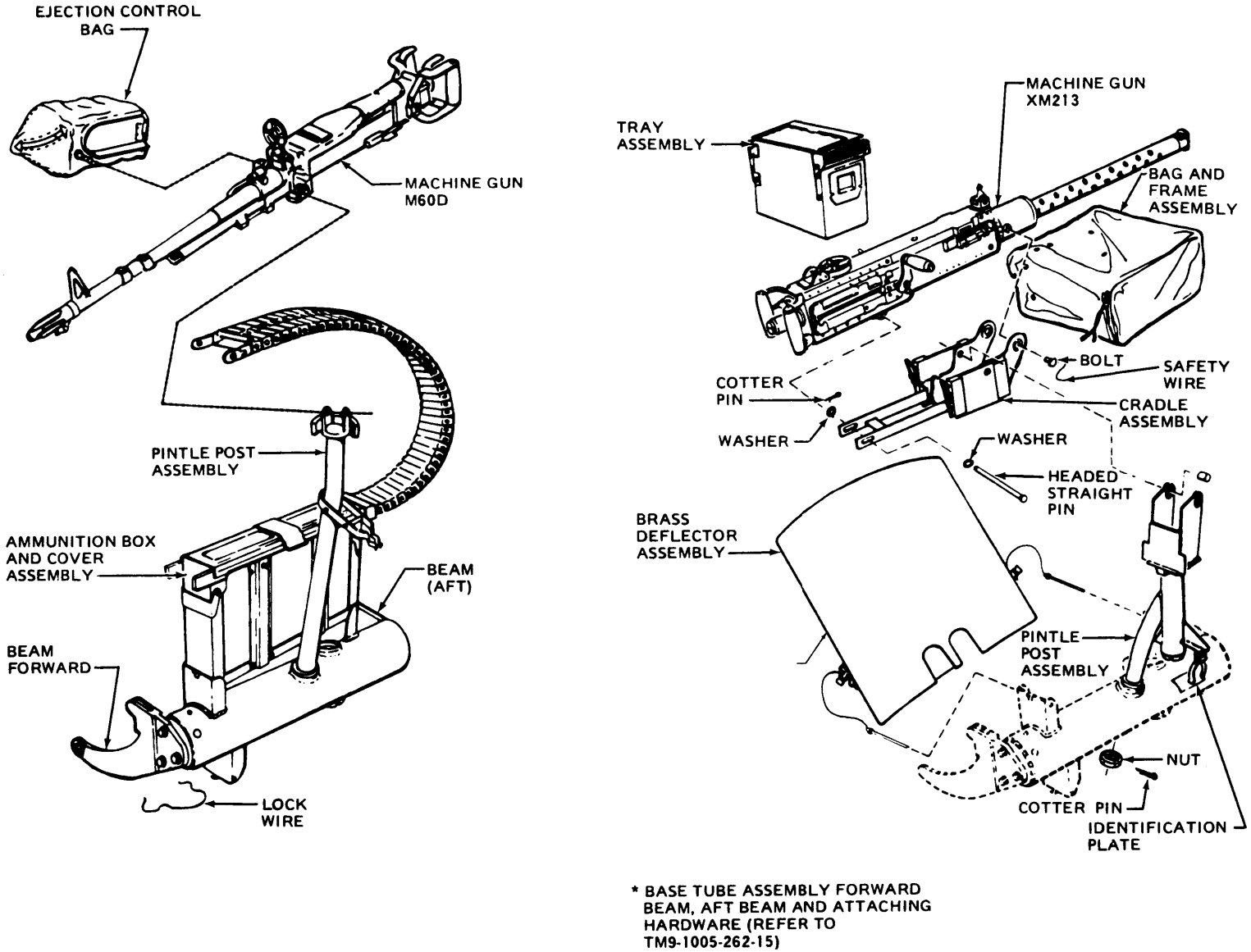

* BASE TUBE ASSEMBLY FORWARD BEAM, AFT BEAM AND ATTACHING HARDWARE (REFER TO TM9-1005-262-15)

Figure 16-23. Armament Subsystem M59 Main Components

Figure 16-23. Armament Subsystem M59 Main Components

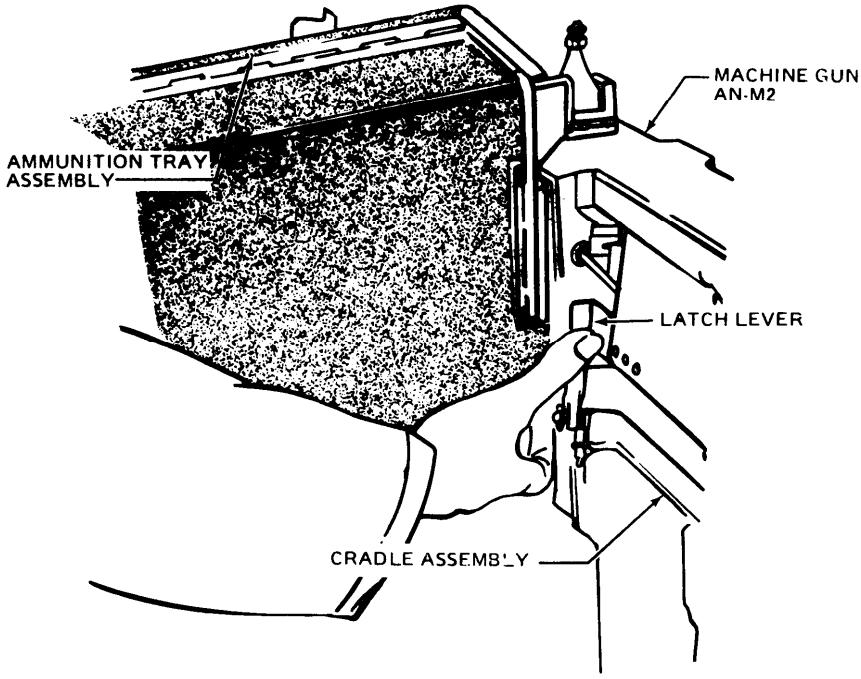

Figure 16-24. Installation/Removal of Ammunition Tray Assembly

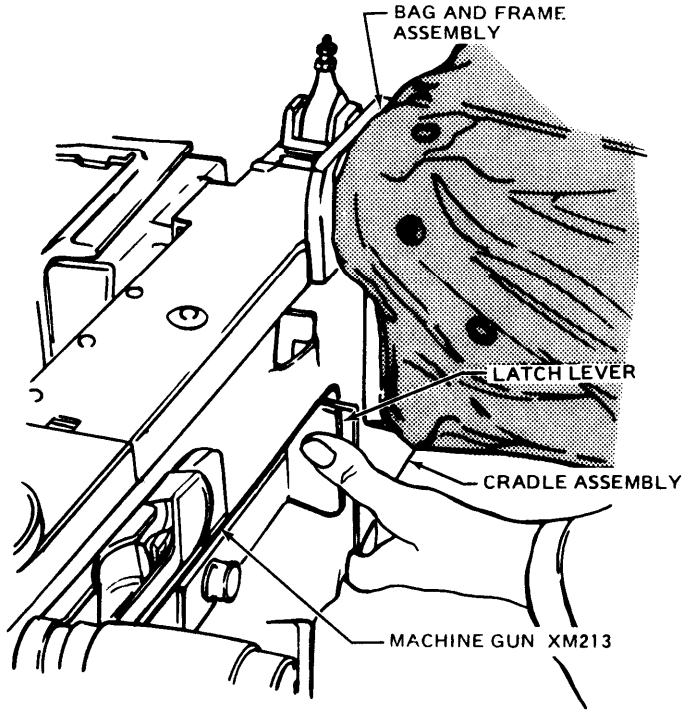

Figure 16-25. Installation/Removal of Bag and Frame Assembly

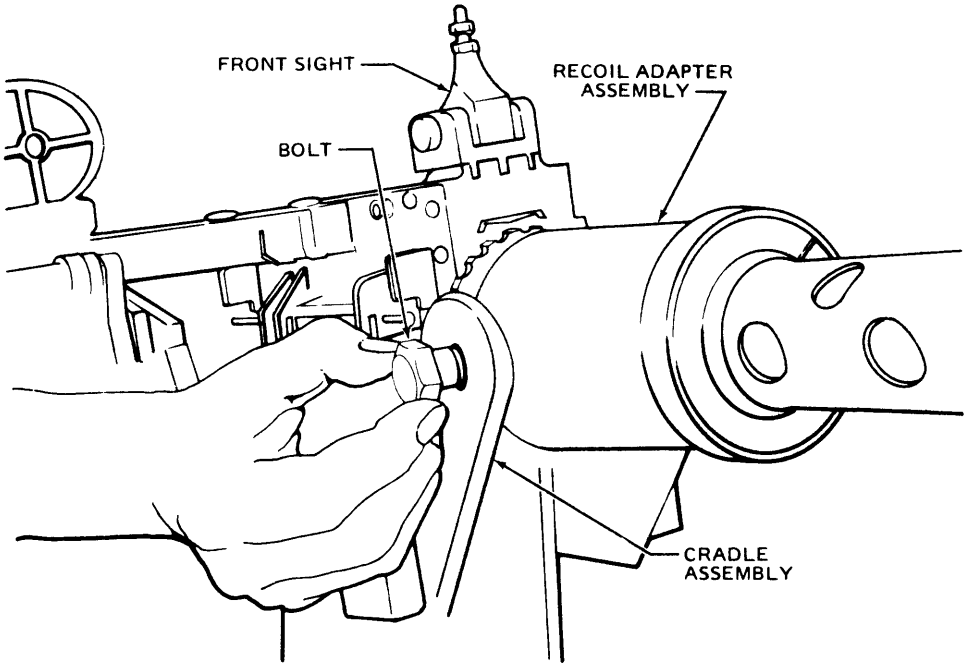

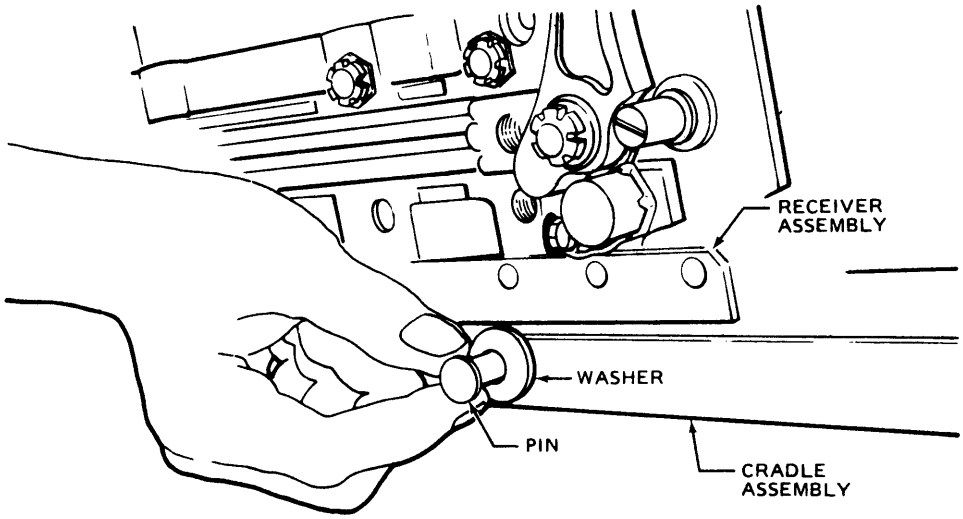

Figure 16-26. Installation/Removal of Caliber .50 Machine Gun XM213

(3) Move the gun downward, then aft to clear the receiver assembly rivets and the headed straight pins used to secure the cradle assembly to the pintle post assembly, and lift the gun from the cradle assembly.

d. Cradle assembly. Remove both headed straight pins (figure 16-27) and lift the cradle assembly clear of the pintle post assembly.

e. Brass Deflector Assembly. At the aft and forward bracket on the base tube assembly; pull the two quick release pins (figure 16-28), release the forward and aft latches, and remove the deflector mount assemblies from the base tube assembly.

f. Mount Assembly (paragraph 16-29 d.).

16-35. Repair or Replacement — Armament Subsystem – M59. (TM 9-1005-304-12.)

16-36. Installation — Armament Subsystem — M59 a. Mount Assembly (paragraph 6-31 a.).

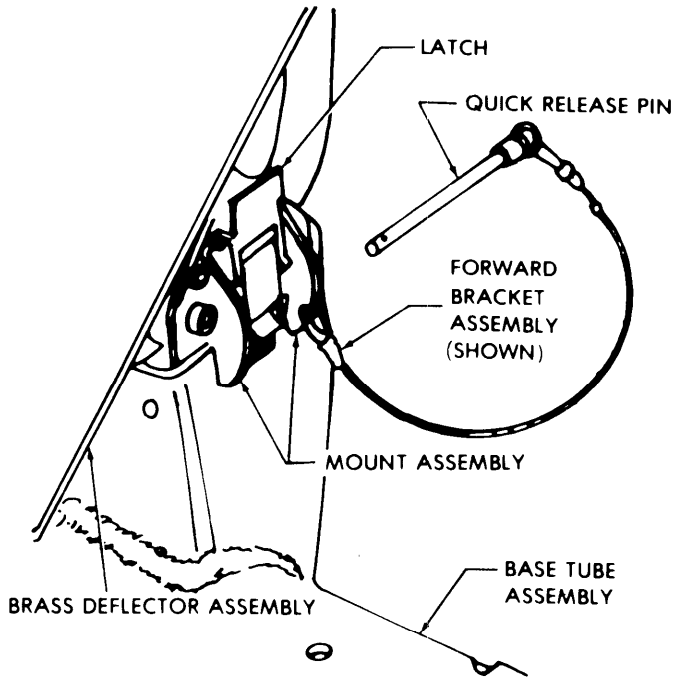

Figure 16-28. Brass Deflector Assembly — Right Side Shown

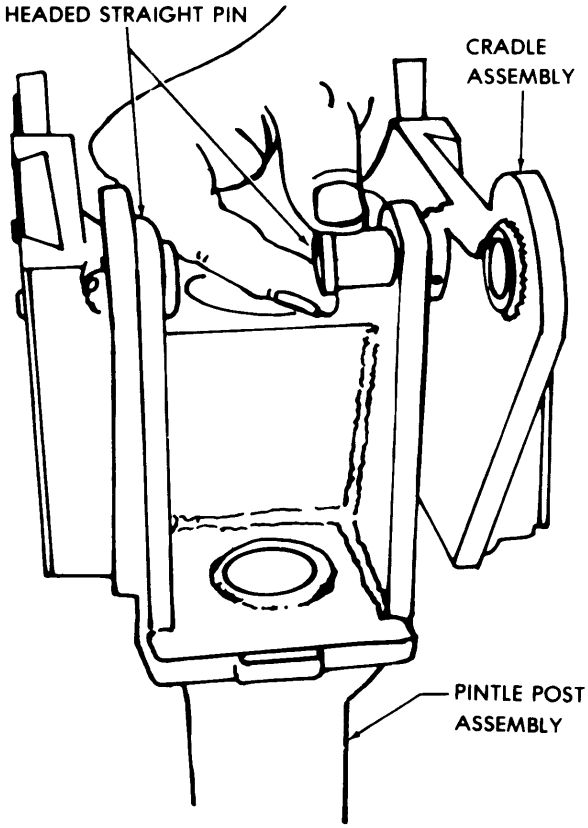

Figure 16-27. Cradle Assembly

b. Brass Deflector Assembly. Position the deflector mount assemblies on the forward and aft bracket assemblies of the base tube assembly and secure with the two latches; install the two quick release pins, one each through the aligned holes on either side of the forward and aft bracket assemblies of the base tube assembly (figure 16-28).

c. Cradle Assembly. Position cradle assembly on pintle post assembly and align holes, install the two headed straight pins to secure the cradle assembly to the pintle post assembly (figure 16-27),

d. Machine gun .50 caliber XM213.

CAUTION

To avoid damage to components when installing machine gun XM213, follow closely the procedure prescribed.

From aft end of cradle assembly, move weapon downward first, then forward to clear rivets on receiver assembly and headed straight pins that secure cradle assembly to pintle post assembly (figure 16-27). Raise weapon upward until holes in

cradle assembly are aligned with mating holes in recoil adapter assembly of machine gun XM213. Install the two bolts (figure 16-26) to secure machine gun XM213 to cradle assembly; secure the two bolts to cradle assembly with lockwire (C127). Align elongated holes in the arms on aft end of the cradle assembly with mating holes in the lower aft end of machine gun XM213 receiver assembly; install headed straight pin, two washers, and cotter pin to secure aft end of cradle assembly to receiver assembly of machine gun XM213 (figure 16-26).

e. Bag and Frame Assembly. Position bag and frame assembly above the bracket of the cradle assembly (right side of weapon) and engage the V-portions of the frame assembly with the mating V-slots in the block of the cradle assembly bracket as shown in figure 16-25; depress the latch lever on the cradle assembly and press downward on the bag and frame assembly until it is fully seated in the cradle assembly bracket.

f. Ammunition Tray Assembly. Position ammunition tray assembly above the bracket of the cradle assembly (left side of weapon) and engage the V-portions of the tray assembly block with the mating V-slots in the block of the cradle assembly bracket as shown in figure 16-24; depress the latch lever on the cradle assembly and press downward on the tray assembly until it is fully seated in the cradle assembly bracket.

16-37. MINE DISPERSING SUBSYSTEM M56. (TM 9-1345-201-12.)

16-38. MINE DISPENSER CONTROL PANEL.

16-39. Description — Mine Dispenser Control Panel. The dispenser control panel (figure 16-29) can be located on any blank space of the pedestal as the installation is not permanent. The dispenser control panel utilized for the mine dispersing subsystem M56 is also used for the scatter minefield marking system M58. The controls necessary for jettisoning the complete mine dispersing assemblies, for selecting quantity of mines, and the SAFE-STBY-ARM switch are located on the panel. The dispenser control panel also contains an INTERVAL select switch for automatic fire, MINES-MARKERS or PAIRS-SINGLES mode selector and a FIRE switch. There is a panel light dimmer and four indicator lights on the panel; ARM, READY, FIRING and EMPTY.

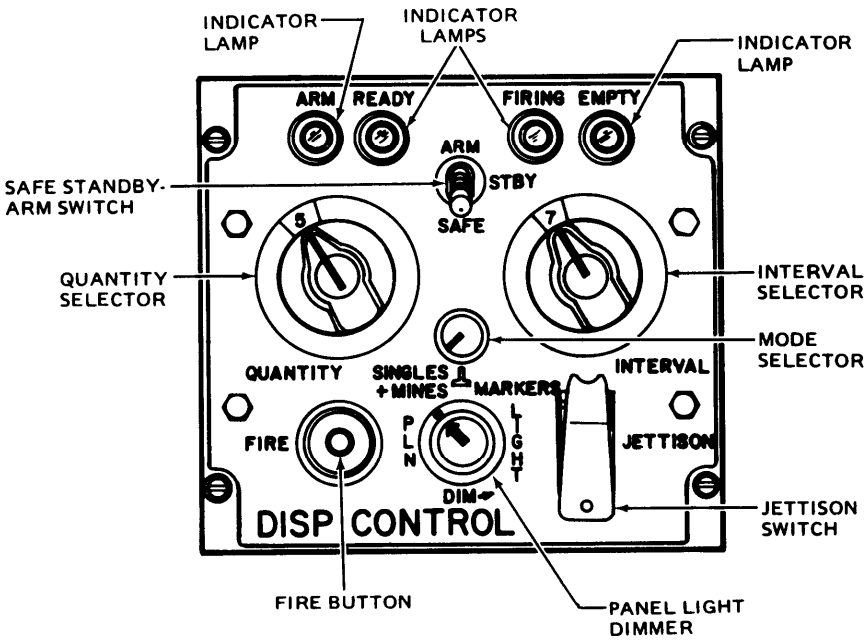

Figure 16-29. Mine Dispenser Control Panel

16-40. Removal — Mine Dispenser Control Panel.

WARNING

Inspect dispenser control panel SAFE-STBY-ARM switch to ensure that it is in the SAFE position.

a. Open side panel of pedestal console.

b. Remove four screws from dispenser control panel and remove panel from pedestal console (figure 4-30).

c. Disconnect wiring harness assembly from connector on the back of the dispenser control panel.

d. Remove wiring harness from left side of pedestal. Place side panel over left side and fasten panel in place. Place blank space cover over pedestal and fasten in place.

16-41. Repair or Replacement — Mine Dispenser Control Panel. (AVIM) (TM 9-1345-201-30.)

16-42. Installation — Mine Dispenser Control Panel. For installation and electrical checkout of dispenser control panel and wiring harness assembly, refer to figure 16-30 and TM 9-1345-201-12.

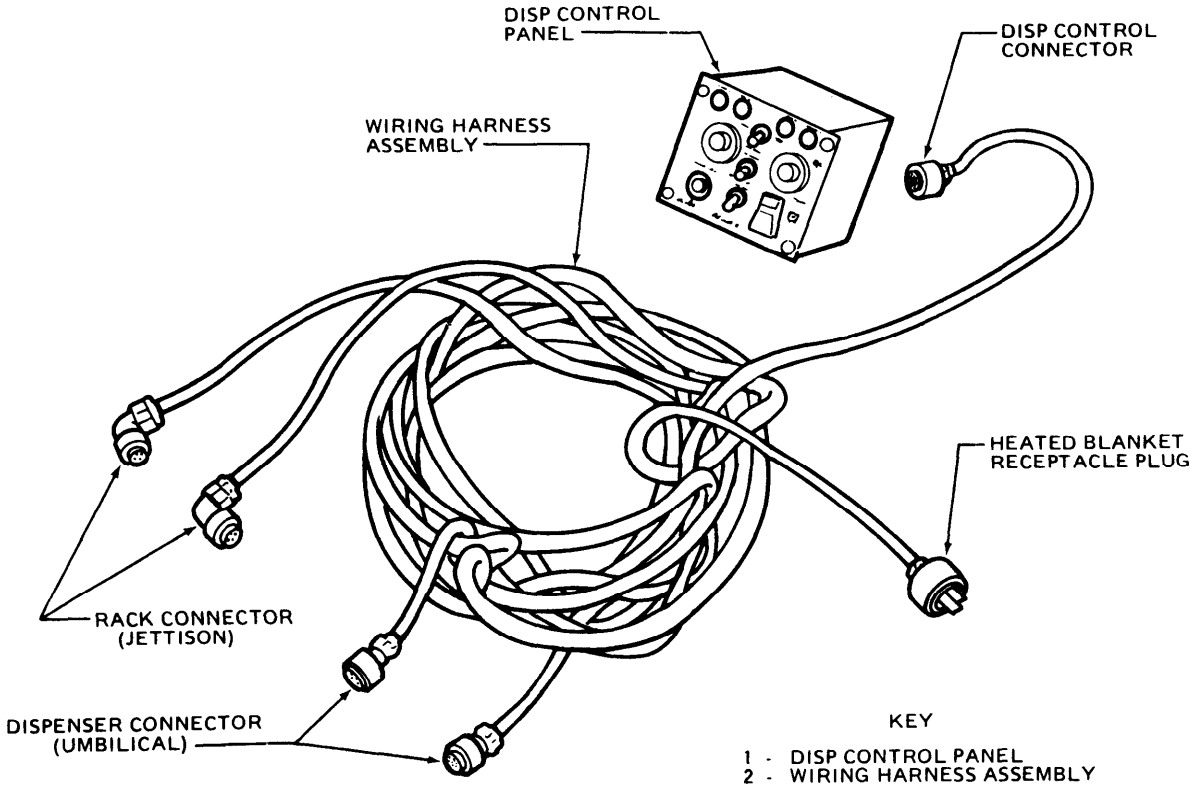

Figure 16-30. M56 Wiring Harness Assembly

16-43. M56 MINE DISPENSER.

16-44. Description -– M56 Mine Dispenser. The mine dispenser (6, figure 16-31) is attached to the pylon assembly on both sides of the helicopter and consists of a bomb dispenser and a cargo of anti-tank, anti-vehicular mines in canisters.

16-45. Removal — M56 Mine Dispenser.

NOTE

Set the helicopter master battery switch to the OFF position. A minimum of two men are required to perform downloading operations.

a. Install intervalometer safety pin (2, figure 16-31) (with red flag).

b. Disconnect electrical power receptacle from dispenser subsystem (6).

c. Position bomb loader under the dispensing subsystem (6) and raise the bomb loader until it makes contact with the subsystem. Remove pylon assembly safety pin (3) from pylon assembly.

d. Loosen the four sway brace jamnuts (1) and raise sway braces to avoid contact with the dispensing subsystem (6).

e. Carefully raise the dispensing subsystem (6) so that the suspension lugs disengage with hooks on pylon assembly releasing the dispensing subsystem on the bomb loader.

f. Lower dispenser (6) from aircraft.

g. Remove nut, flat washer and bolt to disconnect the forward support tube assembly (1, figure 16-32) from the support tube fitting (6) on pylon.

h. Remove nut, flat washer and bolt to disconnect support tube assembly from forward hard point (2).

i. Remove nut, flat washer and bolt to disconnect the aft support tube assembly (3) from the aft support tube fitting (5) on pylon.

j. Remove nut, flat washer and bolt to disconnect support tube assembly from aft hard point (4).

NOTE

Refer to paragraph 16-48 b. for external mechanical jettison release mechanism.

k. Remove nuts (5), flat washers (4) and attaching bolts (3, figure 16-33) to disconnect the pylon support assembly with pylon assembly attached from the external stores assembly.

l. Remove (outboard) fwd and aft tube fittings (2 and 4, figure 16-34) and two nuts and bolts (inboard) to disconnect pylon assembly from pylon support assembly.

m. Remove external stores support assembly. (paragraph 16-3).

16-46. Repair or Replacement — M56 Mine Dispenser (AVIM). (TM 9-1345-201-30.)

16-47. Installation — M56 Mine Dispenser.

NOTE

Set the helicopter battery switch to the OFF position. A minimum of two men are required to perform the up loading operation.

a. Install external stores support assembly (paragraph 16-7).

NOTE

Following steps b. and c. shall be performed on workbench.

b. Position pylon assembly (3, figure 16-34) on pylon support assembly (8).

c. Loosely attach pylon assembly (3) with 2 (inboard) nuts and bolts and (outboard) fittings (2 and 4) to pylon support assembly. Assemble so that fittings (2 and 4) can be turned for installation of tube assembly.

d. Position pylon support assembly (8) with pylon assembly (3) attached against external stores support assembly. Align eight bolt holes and install bolts, flat washers and self-locking nuts. Ensure a washer is under each bolt head and under each nut.

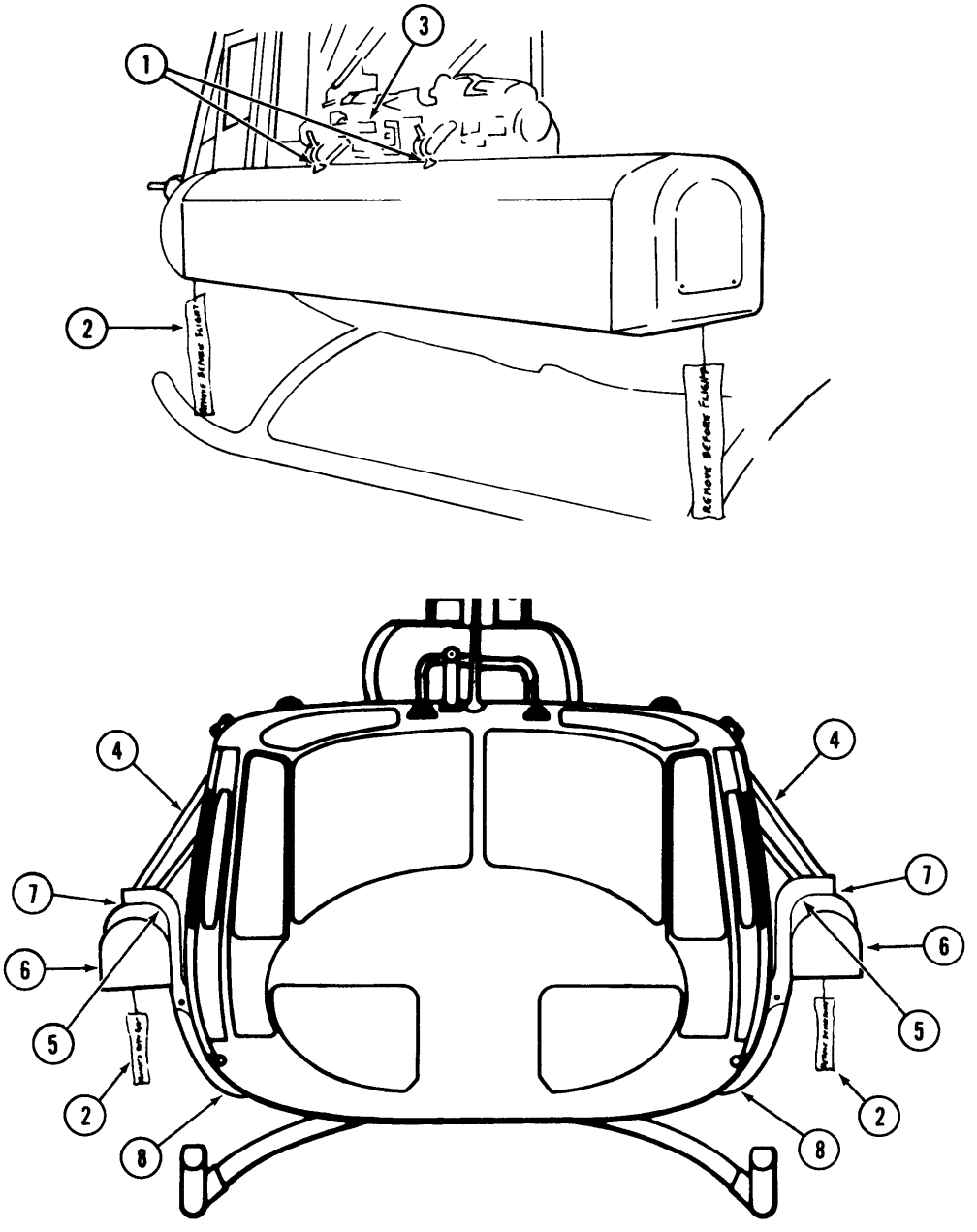

1. Sway braces
2. Intervalometer safety pin (red flag)
3. Pylon assembly safety pin (red flag)
4. Support tube assembly (strut)
5. Pylon support assemblies
6. Disperser subsystem
7. Pylon assembly
8. External stores support assembly

Figure 16-31. M56 Mine Dispensing Subsystem

218-260 0 - 88 - 22

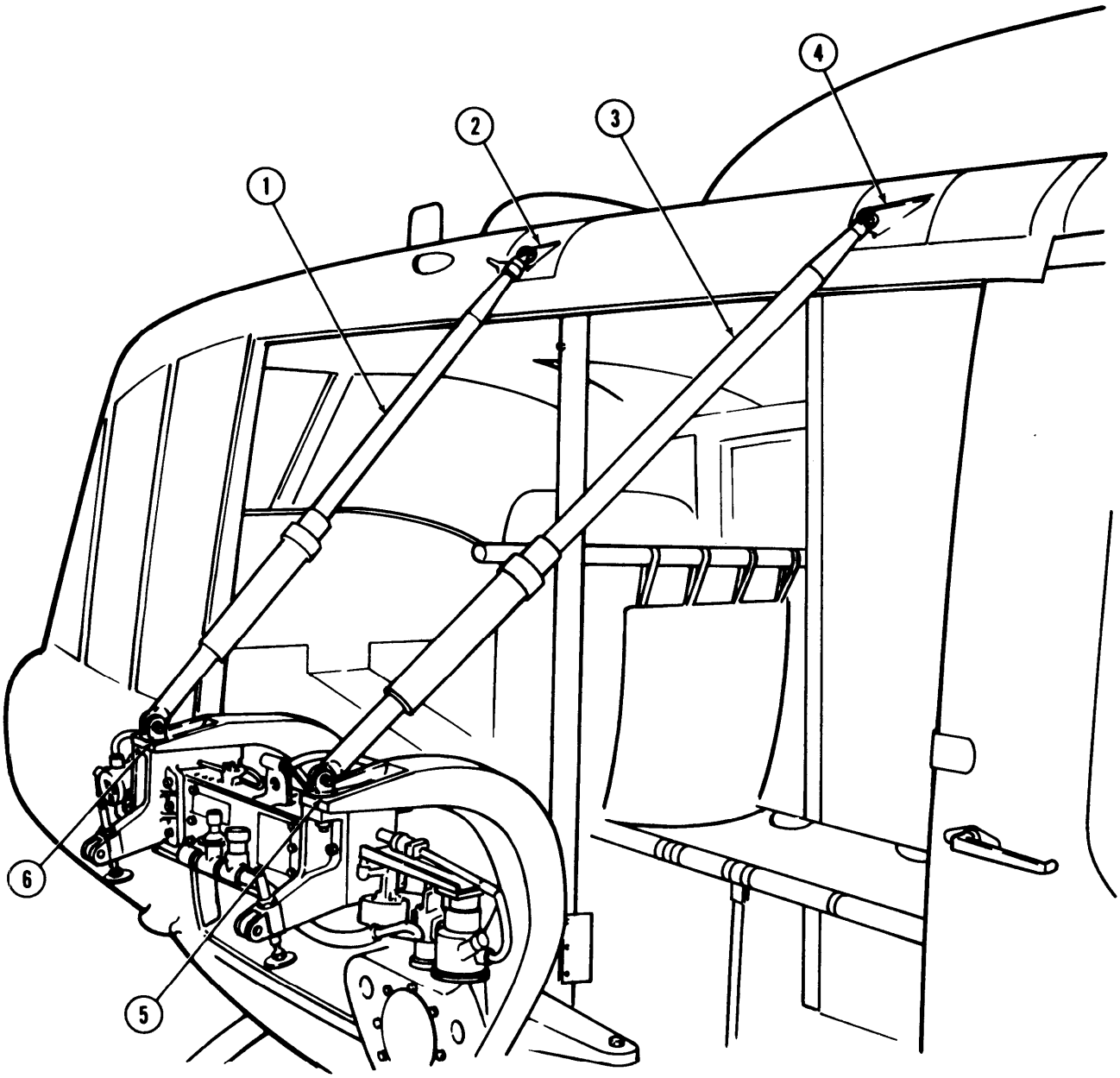

1. Forward tube assembly
2. Forward hardpoint
3. Aft tube assembly
4. Aft hardpoint
5. Aft support tube fitting
6. Forward support tube fitting

Figure 16-32. M56 Support Tube Fittings

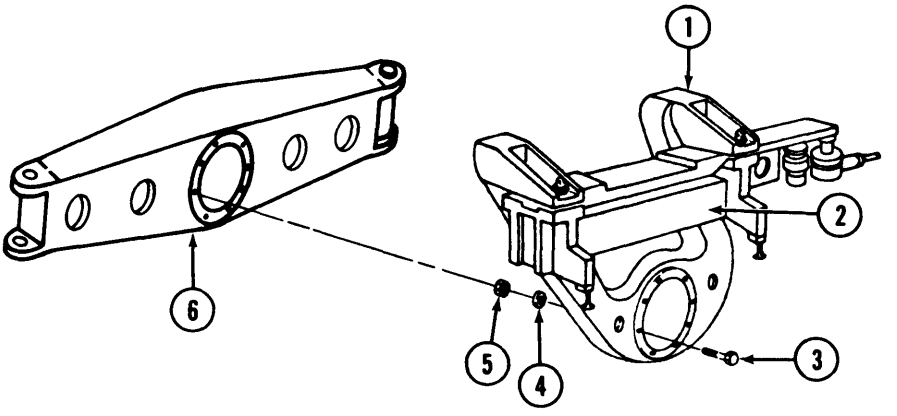

1. Pylon support assembly
2. Pylon assembly
3. Bolt (8 reqd)
4. Washer (8 reqd)
5. Nut (8 reqd)
6. External stores support

Figure 16-33. M56 External Stores Support Assembly

NOTE

The friction dampers shall be inspected at 5 mission intervals. The friction damper breakout forces shall be adjusted within specified limits of 50 TO 150 pounds. Friction dampers that cannot be adjusted within specified limits shall be replaced (paragraph 16-48 a.).

e. Position aft support tube assembly (3, figure 16-32) into place on aft hard point with bolt, flat washer and self-locking nut.

f. Align tube assembly (3) with fitting (5) on pylon support assembly by extending or compressing tube assembly (3).

g. Securely fasten bolts, washers and nuts on aft hard point (4) and support tube fitting (5) on pylon support assembly. Tighten support fitting and nut.

h. Position support tube assembly (1) into place on fwd hard point (2). Loosely secure the tube assembly to the hard point with bolt, flat washer and self-locking nut.

i. Align tube assembly (1, figure 16-32) with fwd support tube fitting (6) on pylon support assembly by extending or compressing tube assembly (1).

j. Securely fasten bolt, washer and nut on fwd hard point (2) and support tube fitting (6) on pylon support assembly. Tighten support fitting and nut.

NOTE

Ensure sway braces (1, figure 16-31) will not interfere with connecting dispensing subsystem to pylon assembly.

k. With dispenser bomb loader, carefully raise the dispenser (6, figure 16-31) up to pylon assembly (7) so that suspension lugs will engage with pylon hooks.

l. Lower sway braces and make contact with dispensing subsystem (6) and tighten the four sway brace jamnuts (1). All braces shall be fingertight only.

WARNING

When suspension lugs engage hooks on pylon assembly (7), install safety pin (3) with red flag in pylon assembly. Remove safety pin before each flight. Install intervalometer safety pin (2) with red flag. Remove safety pin before each flight.

m. Remove bomb loader from the helicopter.

n. Connect electrical power receptacle to dispenser subsystem (6).

16-48. Adjustment — M56 Mine Dispenser. a. Strut damper.

(1) Push in and turn piston rod of friction damper assembly into cylinder and engage boss on piston with slot of strut.

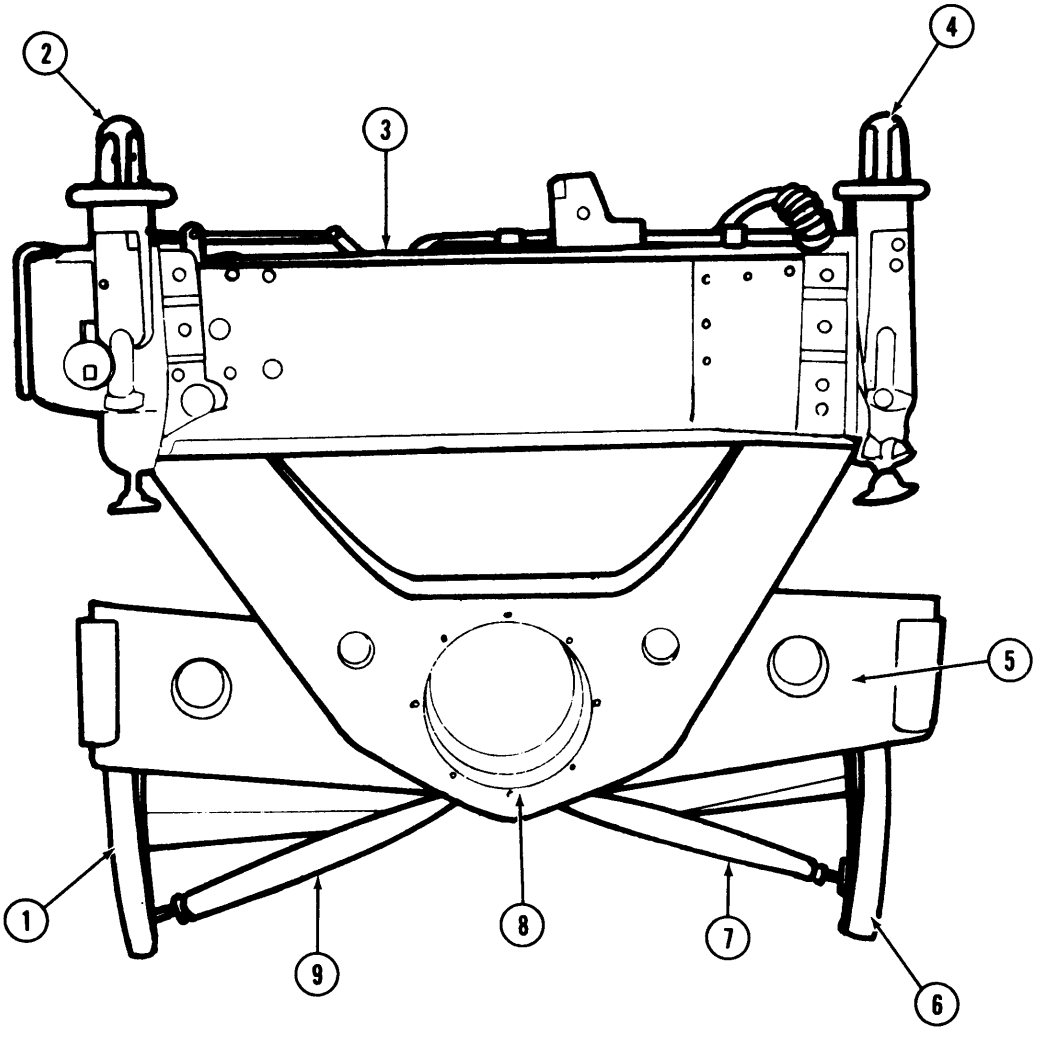

1. Fwd beam support assembly
2. Fwd support tube fitting
3. Pylon assembly
4. Aft support tube fitting
5. Cross beam support assembly
6. Aft beam support assembly
7. Aft brace assembly
8. Pylon support assembly
9. Fwd brace assembly

Figure 16-34. M56 Pylon Support Assembly and Pylon Assembly

(2) Turn piston rod (with boss engaged in slot) as required to obtain **50 TO 150** pounds loading.

b. Manual jettison.

(1) Attach upper end of manual release cable to pylon assembly with flat head pin, washer, and cotter pin (1, 2, and 3, figure 16-35). With hand tension on cable, adjust pulley support bracket (4) to obtain proper cable alignment. This adjustment will place the forward edge of the support bracket (4) between 3.6 and 4.6 inches aft of the aft edge of the pylon support forward arm.

(2) Align manual release cable (5) over pulley in support assembly (6) on top of external stores support assembly. Align holes in upper cable guard tube (7) with holes in support assembly (6) and install attaching pin washer and cotter pin. Thread lower manual release cable (5) through lower guard tubes (8).

(3) Remove access panels from fuselage skin on left side of helicopter and from cabin floor on right side of helicopter. Connect lower manual release cable to existing release cable (10).

NOTE

Cable tension may be varied by adjustment of the turnbuckle (9) located between the upper and lower manual release cables.

16-49. ARMAMENT SUBSYSTEM M6 – 7.62MM MACHINE GUN – M60C.

16-50. Description — Armament Subsystem M6 — 7.62MM Machine Gun — M60C. The Quad 7.62MM machine gun subsystem is designed for use on the UH-1H/V helicopter. It consists, basically of four M60 7.62MM machine guns, two machine gun mounts equipped with turret adapters (3, figure 16-36) which are attached to each of the forward external stores support assemblies (4). Also included are the ammunition feed group, the electrical-hydraulic power source, for control and operation of the machine guns, and the sighting station.

NOTE

The installation is applicable to UH-1H/V serial numbers 63-12956 thru 65-12895.

16-51. MACHINE GUN – M6 Subsystem 7.62MM M60C.

16-52. Description — Machine Gun M6 Subsystem 7.62 MM, M60C. The M60C 7.62MM machine gun is a basic M60 machine gun modified for use with the helicopter. Four guns are available in the M6 subsystem installation. Two guns are mounted on each side of the helicopter, one above the other. The gun cover assemblies on the left-hand guns face inboard, towards the helicopter, while those on the right-hand guns face outboard. Ammunition is fed to the guns from above and cartridge cases are ejected downward. The guns are attached to the mount assemblies in such a manner that they can be quickly and readily removed and replaced. All four machine guns are interchangeable and may be installed on either mount assembly. (TM 9-1005 -243-12.)

16-53. Removal — Machine Gun M6 Subsystem 7.62MM M60C. (figure 16-36.) a. Before removing the machine guns from the helicopter perform the following:

WARNING

In order to guard against danger in case of accidental firing, all personnel should remain clear of the firing pattern. NO-STEP markings on armament should be observed at all times.

(1) Ensure helicopter battery switch is OFF and external power is disconnected.

(2) Set OFF-SAFE-ARMED switch to OFF.

(3) Make sure that control panel indicator lights are out.

(4) Make sure machine guns are in “out-of-battery” position.

b. Unload machine guns as follows:

(1) Rotate latch lever (6) counterclockwise and open cover (7).

(2) Depress spring loaded ammunition chute latches (8) on receiver and disconnect ammunition chute from gun. Carefully fold loose end of ammunition chute over gun mount assembly.

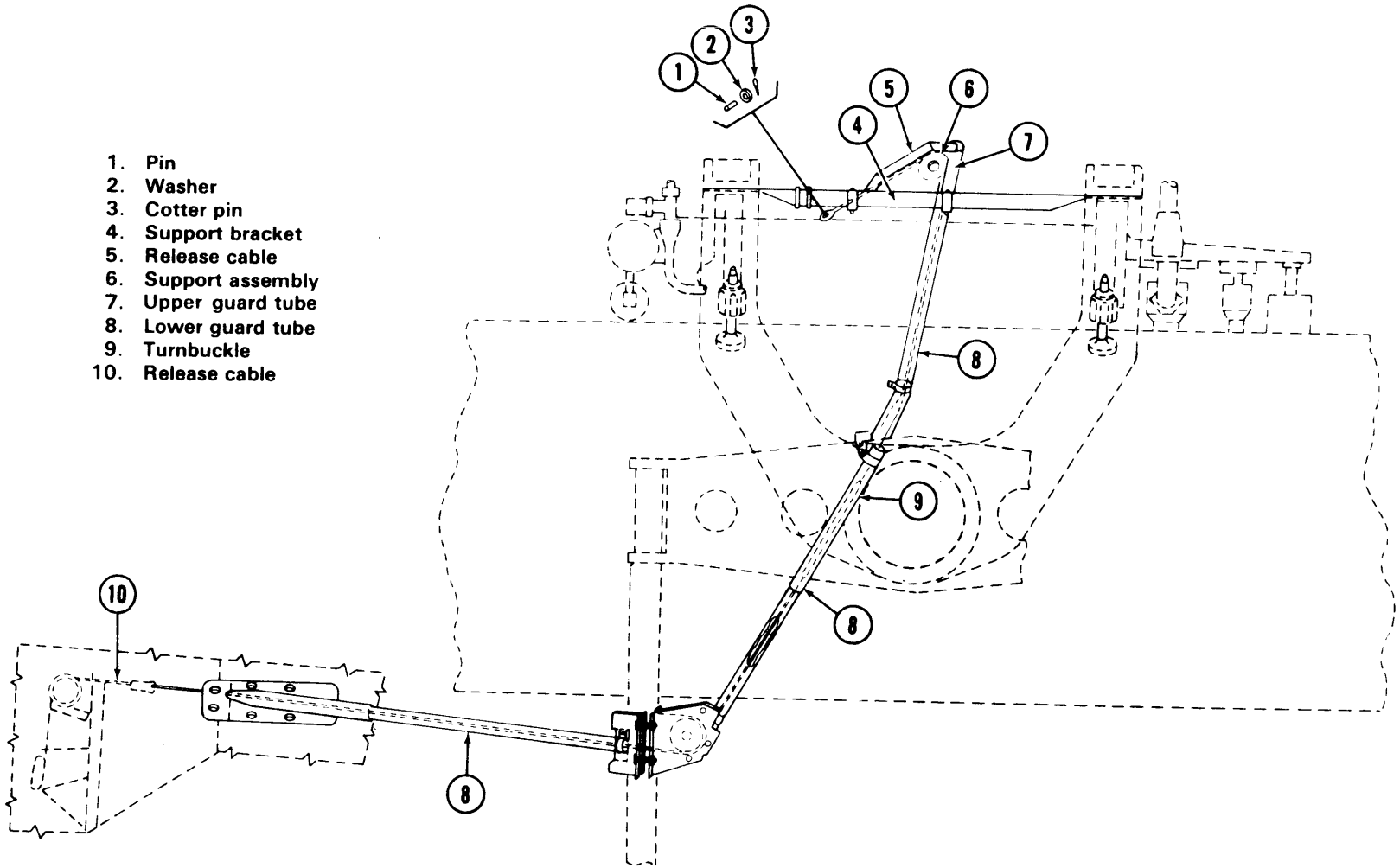

Figure 16-35. M56 Mine Dispenser - Release Mechanism

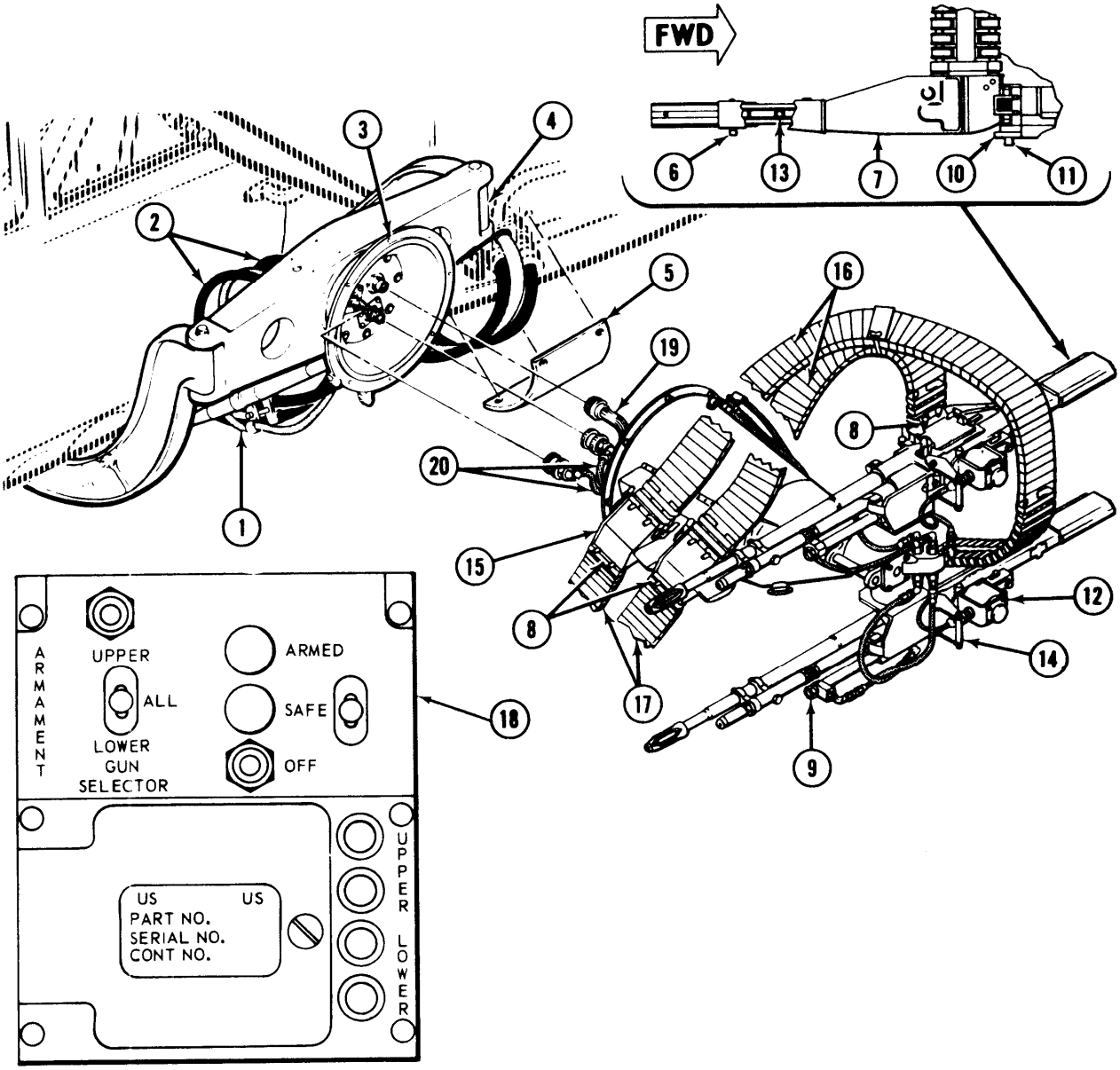

1. Electrical cable — helicopter to turret adapter
2. Hydraulic lines — helicopter to turret adapter
3. Turret adapter
4. External stores support
5. Cover plate
6. Gun cover latch lever
7. Gun cover
8. Ammunition chute latches
9. Charger cylinder assembly
10. Finger latch
11. Cocking handle
12. Firing solenoid assembly
13. Gun bolt
14. Gun latch
15. Cartridge drive
16. Ammunition chute — cartridge drive to machine gun
17. Ammunition chute — ammunition box to catiridge drive
18. Control panel
19. Electrical cable — machine gun to turret adapter
20. Hydraulic lines — machine gun to turret adapter

Figure 16-36. Machine Gun Adapter Kit and Controls Installation

c. Close cover (7) and ensure lever (6) locks cover in place

d. Use a 3/16 inch off-set drift pin, or other suitable tool, to depress plunger in aft end of charger cylinder assembly (9) piston. This action unlocks a detent inside the charger cylinder assembly, which relieves hydraulic pressure and permits disengagement of spring loaded finger latch (10) attaching charger cylinder assembly (9) to machine gun cocking handle (11) Disengage finger latch (10) and rotate latch and charger cylinder assembly piston to clear cocking handle bolt

e. Press upon underside of firing solenoid (12)to trip sear. This action permits the gun bolt (13), cocking handle (11) and charger cylinder assembly (9) piston to move forward to "battery"' position and remain in that position

f. Disconnect electrical connector firing solenoid (12).

g. Depress spring loaded safety latches on gun latch (14) and unlock gun latch. Disengage machine gun from gun latch pawls. Remove machine gun from helicopter.

NOTE

Removal of all four machine guns is the same.

NOTE

Refer to TM 9-1005-243-12 for cleaning, lubrication and detail maintenance procedures of the M6 7.62 MM, M60C, machine guns,

16-54. Inspection and Repair — Machine Gun M6 Subsystem 7.62MM M60C. (TM 9-1005-243-12.)

16-55. Installation — Machine Gun M6 Subsystem 7.62MM, M60C. a. Before installing machine guns on helicopter perform the following:

(1) Ensure battery switch is OFF and external power is disconnected.

(2) Set OFF-SAFE-ARMED switch to OFF.

b. Depress spring loaded safety latches on gun latch (14, figure 16-36) and unlock gun latch. Position and engage machine guns in gun latch pawls. Close and lock spring loaded Safety latches,

c. Connect electrical connector to mating receptacle on firing solenoid assembly (12).

d. Position spring loaded finger latch (10) aft of cocking handle (11) bolt. Engage finger latch with bolt.

e. Refer to paragraph 16-61 and TB 55-1520-208-10/3 for loading and arming machine gun.

NOTE

Installation of all four machine guns is the same.

16-56. MOUNT AND ADAPTER -- M6 SUBSYSTEM 7.62 MM M60C MACHINE GUN

16-57. Description — Mount and Adapter — M 6 Subsystem 7.62MM M60C Machine Gun. The two gun mount assemblies (figure 16-36) each support two 7.62MM machine guns and contain necessary equipment for movement of machine guns and ammunition. Each mount is capable of moving the two guns through a vertical arc of plus nine degrees and minus 66 degrees from centerline position. They can also move both guns horizontally from 12 degrees Inboard to 70 degrees outboard. All four guns move simultaneously, but when either mount moves the attached gun to the 12 degree inboard position a solenoid switch is activated and movement and firing of those guns is automatically stopped. Movement of the guns is controlled by means of hydraulic power, Each gun mount is equipped with an -electrically operated cartridge drive which moves the ammunition from the ammunition boxes to the machine guns. The inboard end of each gun mount is attached to a turret adapter, which, in turn, is attached to an external stores support assembly. A hinge at the junction of the mount and adapter permits the mount to be swung to one side for-easy access to hydraulic and electrical connectors.

NOTE

Left-hand and right-hand gun mounts and turret adapters are not interchangeable.

16-58. Removal — Mount and Adapter — M6 Subsystem 7.62MM, M60C Machine Gun a. Remove M60C machine guns (paragraph 16-53).

b. Depress spring loaded ammunition chute latches (8, figure 16-36) at top and bottom of cartridge drives (15) and release ammunition chutes from cartridge drives. Remove cartridge drive to machine gun ammunition chutes (16) and place on helicopter aft cabin floor or other suitable location. Fold ammunition box to cartridge drive ammunition chutes (17) back onto aft cabin floor.

c. Remove eight nuts, washers, and bolts attaching gun mount to turret adapter (3). Carefully swing gun mount open.

WARNING

Each gun mount weights approximately 60 pounds. Use two men to remove each mount as outlined in the following step d.

CAUTION

Use care not to damage hydraulic lines (20) at quick disconnects on turret adapter (3) and immediately cap or cover male and female connectors to prevent entrance of foreign material. Disconnect electrical cable from receptacle on turret adapter (3) and cap or cover electrical connector and receptacle to prevent entrance of foreign material.

d. Position one man on each side of the gun mount and carefully raise the mount from the hinge pins on the turret adapter (3). Move gun mount to location where it will not be damaged.

e. Disconnect hydraulic lines (2) at helicopter fuselage quick disconnects. Cap or cover lines and connectors to prevent entrance of foreign material.

f. Back off check nuts connecting hydraulic lines (2) to turret adapter (3) quick disconnects. Disconnect hydraulic lines from quick disconnects. Remove, and cap or cover hydraulic lines and connectors to prevent entrance of foreign material.

g. Disconnect electrical cable (1) from receptacle to prevent entrance of foreign material.

h. Remove eight nuts, washers and bolts attaching turret adapter (3) to external stores support assembly (4) and remove adapter.

NOTE

Turret adapter (3) may be inspected by Fluorescent Penetrant method, (TM 55-1500-204-25/1). Before proceeding with such impaction complete the following steps i. and j.

i. Back off check nut attaching electrical receptacle to adapter plate and remove receptacle and attached cable (1).

j. Remove four nuts, washers and bolts attaching each hydraulic mounting flange to turret adapter and remove mounting flanges. Back off quick disconnect, check nuts and remove hydraulic quick disconnects from turret adapter.

k. Refer to TM 9-1005-243-12 for further information.

16-59. Installation — Mount and Adapter — M6 Subsystem 7.62MM M60C Machine Gun.

NOTE

If adapter (3) has been completely disassembled, complete steps a. and b.

a. Position hydraulic quick disconnect in adapter (3, figure 16-36) and install check nuts. Position hydraulic mounting flange over each check nut and install four attaching bolts, washers and nuts.

b. Thread electrical cable (1) through turret adapter (3) and position electrical receptacle. Install attaching check nut.

c. Position adapter (3) to external stores support assembly (4) and install eight attaching bolts, washers and nuts.

d. Uncap or uncover electrical cable (1), connector and receptacle at helicopter fuselage skirt. Connect electrical cable to receptacle.

e. Uncap or uncover hydraulic lines (20), adapter (3), quick disconnects and helicopter fuselage quick disconnects. Connect lines (20) to quick disconnects.

WARNING

Each gun mount weighs approximately 60 pounds. Use two men to install each mount as outlined in the following step f.

f. Position one man on each side of the gun mount and carefully engage gun mount half hinge on the adapter (3) hinge pins.

g. Uncap or uncover electrical cable connector and turret adapter (3), receptacle and connect electrical cable (19) to receptacle.

h. Uncap or uncover hydraulic lines and turret adapter (3) quick disconnects and connect hydraulic lines (20) to quick disconnects.

CAUTION

Use extreme care when closing the gun mount assembly to avoid pinching or kinking the hydraulic hoses and to assure that they do not interfere with servo valves in the gun mount assembly. Make certain that the small two-pin plug is properly mated with the receptacle on the charger control valve. DO NOT force gun mount assembly into position.

i. Carefully swing gun mount to the closed position and install eight bolts, washers, and nuts attaching the gun mount to the turret adapter (3).

j. Position loose end of ammunition box to cartridge drive ammunition chutes (16) to bottom of cartridge drives (15). Depress spring loaded ammunition chute latches (8) and connect ammunition chutes (17) to cartridge drives (15).

k. Position cartridge drive to machine gun ammunition chutes (16) to top of cartridge drives (15). Depress spring loaded ammunition chute latches {8) and connect ammunition chutes (16) to cartridge drives (15).

l. Install M60 7.62MM M60C machine guns (paragraph 16-55).

m. Refer to TM 9-1005-243-12 for further information.

16-60. AMMUNITION FEED GROUP — M6 SUBSYSTEM 7.62MM, M60C MACHINE GUN.

16-61. Description — Ammunition Feed Group — M6 Subsystem 7.62MM M60C Machine Gun. The ammunition feed group (figure 16-37) consists, basically, of eight ammunition chutes, twelve ammunition boxes and an ammunition box tray equipped with three hold-down strap assemblies. Four ammunition chutes, two on each side of the helicopter, connect the top of the cartridge drive assemblies to the machine guns. A comparable installation connects the ammunition boxes to the bottom of the cartridge drive assemblies. The chutes connecting the ammunition boxes to the bottom of the cartridge drive assemblies pass through an opening in the cargo floor and the fuselage. The ammunition boxes are mounted on the ammunition box tray, located in the helicopter cargo area, and are held firmly in place by three hold-down strap assemblies. The sheet metal ammunition boxes are arranged in three groups of four boxes each. Each box is capable of holding approximately 450 rounds of ammunition, with a total capability of 5434 rounds, weighing 353.21 pounds. The ammunition box tray is attached to the helicopter cargo area floor by means of 16 screws. The three hold-down strap assemblies secure the ammunition boxes and tray to footman's loops in the cargo area floor.

16-62. Removal — Ammunition Feed Group — M 6 Subsystem 7.62MM M60C Machine Gun. a. Accomplish paragraph 16-34 steps a. and b.

b. Depress the spring loaded ammunition chute latches (8, figure 16-36) which connect the chutes (16) to the top of the cartridge drives (15), and disengage chutes from cartridge drives.

NOTE

Ammunition chute clamps may be removed from chutes before storage.

c. Depress the spring loaded ammunition chute latches (8) which connect the chutes (17) to the bottom of the cartridge drives (15) and the a m munition boxes. Withdraw chutes through opening in the cargo floor and fuselage.

NOTE

Removal of the right and left-hand ammunition chutes is the same.

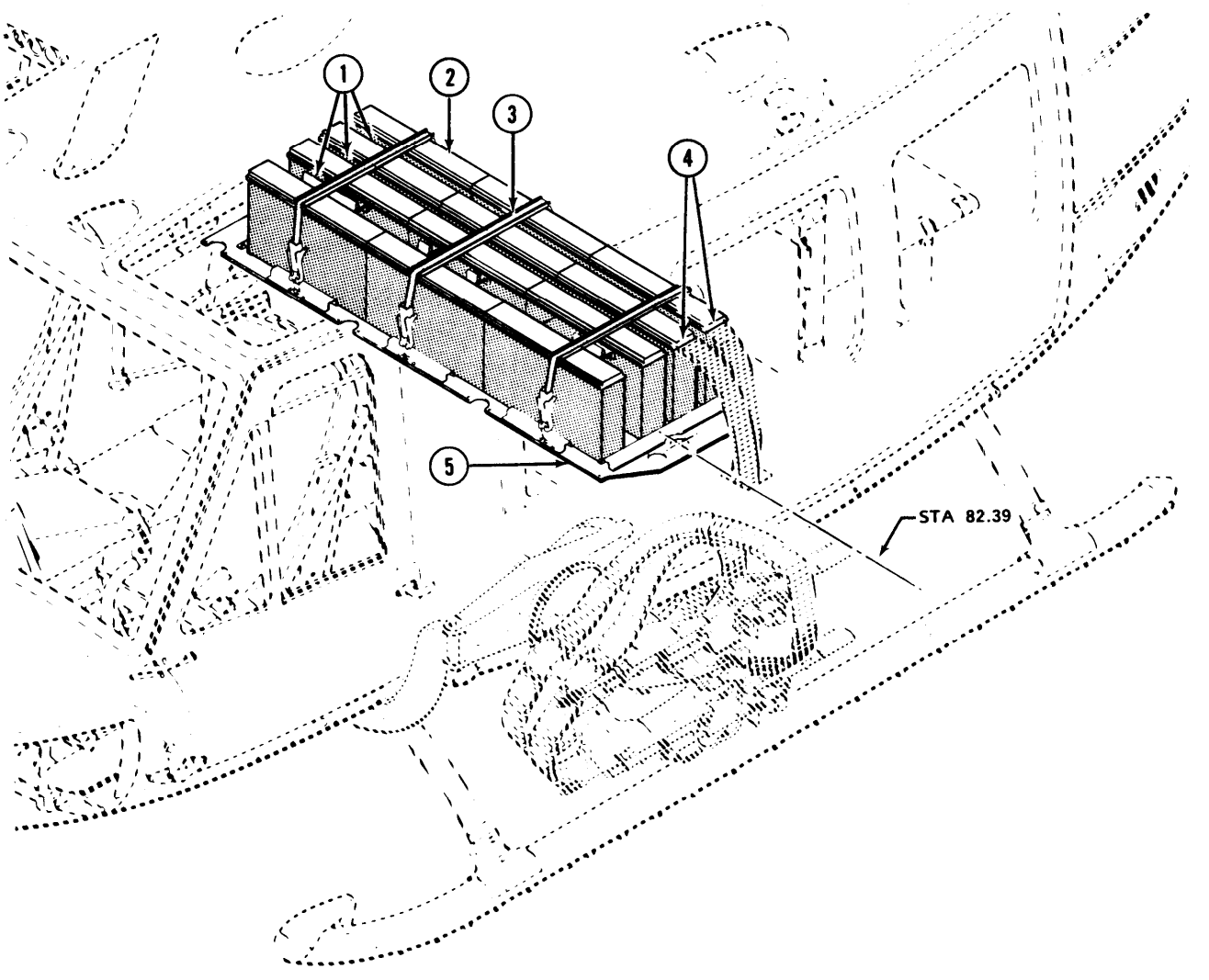

1. Ammunition box clamps
2. Ammunition boxes
3. Strap assemblies
4. Ammunition chute latches
5. Ammunition box tray

Figure 16-37. Ammunition Pad Group

d. Release three ammunition box hold-down strap assemblies (3, figure 16-37) at lower, forward side of ammunition box tray (5). Remove strap assemblies (3) and ammunition box clamps (1).

e. Remove ammunition boxes (2) from helicopter.

f. Remove 16 screws attaching ammunition box tray (5) to cargo area floor and remove tray from helicopter.

16-63. Installation — Ammunition Feed Group — M6 Subsystem 7.62MM M60C Machine Gun. a. Position ammunition box tray (5, figure 16-37) in helicopter and install 16 attaching screws.

NOTE

The two existing screws (forward and aft of the ammunition tray) which comprise the second group inboard from the left-hand side of the helicopter, must be replaced.

b. If ammunition boxes are not loaded, complete the following:

(1) Unsnap clamps (1) on top of ammunition box covers and remove covers.

(2) Fold the allowable maximum quantity of ammunition into boxes with links up, single-link end first. Projectiles must point to the left for feed to the left-hand machine guns and to the right for feed to the right-hand guns.

(3) Position the twelve ammunition boxes (2) on the ammunition box tray (5).

(4) Connect the ammunition belts together at adjoining boxes.

(5) Crimp over the trailing link hanging out of the end of the third box in each row with a pair of pliers. Inspect ail ammunition to make sure that it is laying properly in all boxes.

(6) Install covers on all ammunition boxes.

c. Position ammunition box clamps (1). Hook three hold-down strap assemblies to footman's loops along aft side of ammunition box tray (5) and position snugly over ammunition boxes. Position other ends of strap assemblies footman's loops forward of ammunition box tray (5). Tighten and secure hold-down strap assemblies (3).

d. Position one end of ammunition chutes (16, figure 16-36) to top of cartridge drives (15). Depress ammunition chute latches (8) and connect chutes to drives. Allow opposite ends of these two chutes to hang over the gun mount assembly.

e. Position one end of ammunition chutes (17) to bottom of cartridge drives (15). Depress ammunition chute latches (8) and connect chutes to drives. At a short distance behind the gun mount assembly, grasp the two ammunition chutes and position the lower chute on top of the upper chute. Secure in this position with an ammunition chute clamp approximately midway between the gun mount assembly and the opening in the helicopter fuselage.

f. Extend free ends of left-hand ammunition chutes through the opening in the helicopter fuselage and cargo area floor into the cargo area. Connect the lower machine gun chute to the end box of the second row of ammunition boxes and the upper machine gun chute to the end box of the first row of ammunition boxes (figure 16-37).

NOTE

Installation of left and right hand machine gun ammunition chutes is the same, except the right-hand lower gun chute is connected to the end box of the fourth row of ammunition boxes and the right-hand upper gun chute is connected to the end box of the third row of ammunition boxes.

16-64. CONTROL PANEL – M6 SUBSYSTEM 7.62MM M60C MACHINE GUN.

16-65. Description — control Panel — M6 Subsystem 7.62MM M60C Machine Gun. The control panel (18, figure 16-36) is located in the lower left-hand corner of the pedestal between the pilot and copilot. it contains the OFF-SAFE-ARMED switch, a gun selector switch, an ARMED (red) safelight, a SAFE (green) light and necessary fuses, amplifiers and resistors.

16-66. Removal — Control Panel — M6 Subsystem 7.62MM M60C Machine Gun. a. Make sure that the helicopter master battery switch is in the OFF position and that external power is disconnected.

b. Release quick-disconnect fasteners attaching armament control panel assembly to pedestal and carefully raise panel assembly from pedestal.

c. Disconnect electrical connectors at back of panel and remove panel assembly. Cap or cover electrical connectors to prevent entrance of foreign material.

16-67. Installation — Control Panel — M6 Subsystem 7.62MM M60C Machine Gun. a. Uncap or uncover electrical connectors and connect to back of control panel assembly.

b. Position control panel assembly in pedestal and engage quick-disconnect fasteners.

16-68. SIGHT STATION – M6 SUBSYSTEM 7.62MM M60C MACHINE GUN.

16-69. Description — Signt Station — M6 Subsystem 7.62MM M60C Machine Gun. The sighting station is attached to the cabin roof above and forward of the copilot's station. The purpose of this equipment is remote alignment of machine guns.

16-70. Removal — Sight Station — M6 Subsystem 7.62MM M60C Machine Gun. a. Make sure that the helicopter master battery switch is in the OFF position and the external power is disconnected.

b. Disconnect electrical connector from receptacle on sighting station mounting pad bracket and cap or cover connector and receptacle to prevent entrance of foreign material.

CAUTION

The sighting station is a delicate, precision instrument. Do not drop or jar at any time.

c. Manually support the sighting station and remove the four bolts and washers attaching it to the mounting pad on the cabin roof.

d. Carefully remove sighting station from the helicopter.

16-71. Installation — Sight Station — M6 Subassembly 7.62MM M60C Machine Gun.

CAUTION

The sighting station is a delicate, precision instrument. Do not drop or jar at any time.

NOTE

Thick edge of the mounting plate must be forward toward the nose of the helicopter.

a. Carefully position sighting station and align mounting holes. Install four attaching washers and bolts.

b. Uncap or uncover electrical connector and receptacle and engage connector with receptacle.

16-72. Gun Firing Relay — M6 Subsystem 7.62MM M60C Machine Gun.

16-73. Description — Gun Firing Relay — M6 Subsystem 7.62MM M60C Machine Gun. The gun firing relay is mounted on a bracket inside the pedestal at approximate center. Two terminal blocks are provided for electrical wiring interconnection.

16-74. Removal — Gun Firing Relay M6 Subsystem 7.62MM M60C Machine Gun. a. Make sure that the helicopter master battery switch is in the OFF position and that external power is disconnected

b. Release quick disconnect fasteners and remove access panel from floor under pilots seat.

c. Disconnect electrical wiring from relay and cover wire ends with tape.

d. Remove four attaching nuts, washers and screws and remove relay.

16-75. Installation — Gun Firing Relay M6 Subsystem 7.62MM M60C Machine Gun. a. Position gun firing relay in pedestal and install four attaching screws, washers and nuts.

b. Remove tape from wire ends and-connect electrical wiring to relay.

c. Position access panel to floor and engage fasteners.

16-76. ROCKET SYSTEM – XM3.

16-77. Description — Rocket System XM3. Complete electrical provisions for installing the XM3, 2.75 rocket installation are included in helicopter Serial No. 63-12956 through 65-12895. The 2.75 inch, XM3, fixed rocket installation includes two launcher pods (1, figure 16-38); one on each side of the helicopter. Each pod consists of four modules, each of which contains six launcher tubes, thus giving the helicopter a total armament capability of forty-eight modified Navy Type Mark IV, Mod Vl, rockets. Each launcher pod may be adjusted from plus six degrees to minus six degrees by manually operating the adjustable link assembly (3) the aft end of which is pinned to the actuator bracket (4). Manually adjustable back-up bearings act as mechanical stops to limit the launcher at plus 8 degrees to minus 18 degrees relative to the helicopter. launcher pods can be jettisoned by means of explosive bolts. Each pod is attached to an adapter assembly (5) by means of four quick release attachment pins. Each adapter assembly is attached to a crank assembly (6) which mates to the center hole in the external stores support assembly (7) crossbeam. The external stores support assembly is attached to the aft “hardpoints” on the helicopter fuselage structure.

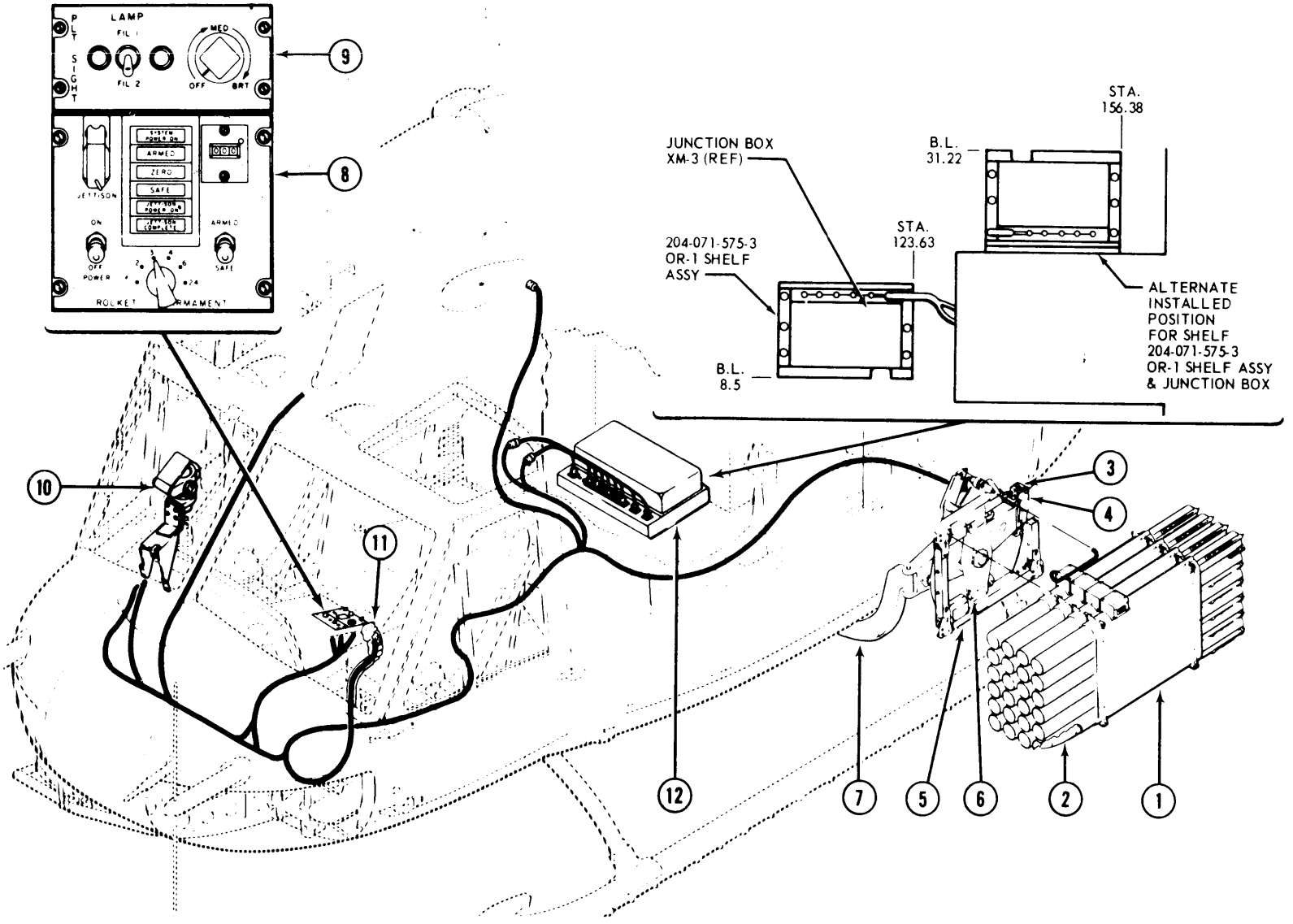

1. Launcher pods
2. 2.75 inch rocket
3. Adjustable link assembly
4. Actuator bracket
5. Adapter assembly
6. Crank assembly
7. External stores support assembly
8. Armament control panel assembly
9. Sight light panel assembly
10. Mark 8 sight assembly
11. Cyclic control stick trigger switches
12. Junction box

Figure 16-38. MX3 Fixed 2.75 Rocket Installation

Figure 16-38. MX3 Fixed 2.75 Rocket Installation

a. Rocket Components. Other components of this installation include an armament control panel assembly and a sight light panel assembly, located in the lower left-hand corner of the pedestal; a Mark 8 sight assembly, mounted on the right-hand side of the instrument panel just above the helicotper altimeter; cyclic control stick trigger switches; a junction box, and necessary electrical wiring, circuit breakers and relays. The system is capable of selective firing from the cabin, by either the pilot or copilot in the following modes:

(1) Pair, single — one from each pod.

(2) Ripples of 1-2-3-4-6 or 24 pairs (up to 48 rounds).

b. Rocket — 2.75 Inch. The 2.75 inch folding fin aircraft rocket (figure 16-38) (FFAR) used with the XM3 fixed system is a standard Navy Type IV, Mod Vl, which has been modified to impart a ballistic spin of fifteen revolutions per second by scarfing the thrust nozzles at a twenty-four degree angle. Each rocket weighs 18 pounds, with the warhead containing 1.4 pounds of HEX-1 explosive. A shear release of 100 pounds is required for the shear wire in the detent rod. Rockets are fixed with an average thrust of 761 pounds and have a burning distance of 6000 feet.

16-78. Rocket Removal – Rocket System XM3.
a. Set the helicopter master battery switch to the OFF position.

WARNING

Before removing an unfired round from the launcher, make sure that the firing circuit has been made safe at the rocket armament control panel and that the rocket jettison circuit breakers have been pulled. Handling of the rockets shall be confined to trained personnel. Smoking shall be prohibited in the vicinity of rockets at all times. No spark producing devices or power tools shall be used in the vicinity of rockets at any time. Precautions shall be taken in handling unshielded rockets in the vicinity of radio and radar transmitters, as there is the possibility of squibs actuating prematurely. A motor or rocket which has been dropped shall not be used but shall be labeled "Dropped Round" stored apart from usable rounds, and proper personnel contacted for disposition. Unnecessary personnel shall be kept well away from the front and rear of loaded launchers and launchers in the process of being loaded or unloaded. The helicopter shall not be fueled when rockets are nearby or in the launchers. While launchers are being loaded or unloaded the helicopter shall be pointed away from personnel and installations.

NOTE

Handling of the 2.75 inch FFAR is similar to that of other aircraft rockets. It should be transported to and from the assembly area and loaded and unloaded in accordance with standard handling practices.

b. Disconnect the battery.

c. Electrically ground the helicopter to an earth ground.

d. Release the launcher firing pin assembly from the fin retainer assembly and swing the firing pin assembly clear of the breech.

e. Release and remove aluminum shear wire from detent rod.

NOTE

Rocket may be loaded and unloaded from either the muzzle or the breech end of the launcher tube.

f. Release launcher latch and carefully remove rocket from launcher tube.

g. Install fin protector as soon as rocket has been removed from launcher tube.

h. Visually inspect synchronized elevator and forward section of tailboom for possible damage caused by rocket debris.

16-79. Rocket Loading — Rocket System XM3.
a. Obseve all safety precautions outlined in paragraph 16-78.

b. Make sure that the armament control panel counter reads 000 and the ZERO indicators on the panel and junction box are illuminated.

c. Pull out the two rocket jettison circuit breakers.

d. Set the helicopter master battery switch to the OFF position.

e. Disconnect battery.

f. Electrically ground the helicopter to an earth ground.

g. Make sure the JETTISON switch cover on the armament control panel is wired with copper break wire (C305).

h. Make sure the launcher firing pin assembly is clean and will make good electrical contact. Swing the firing pin assembly clear of the breech.

i. Remove the fin protector from the rocket fins. Make sure the fin retainer and contact button are in place and that the launcher latch retaining groove and contact disc are free from grease and foreign material.

WARNING

If a gap exists between the front end of the rocket motor and the rocket head when assembled hand-tight, the rocket shall not be used.

NOTE

Rocket may be loaded and unloaded from either the muzzle or the breech end of the launcher tube.

j. Push the rocket into the launcher tube until the launcher latch seats firmly in the launcher latch retaining groove on the rocket.

WARNING

Use of improper wire may cause rocket to hang up and not launch.

k. Position aluminum shear wire (C300) in detent rod and crimp to retain.

l. Swing the launcher firing pin assembly back in place until the pin assembly snaps into the fin retainer assembly.

16-80. LAUNCHER AND ADAPTER.

16-81. Description — Launcher and Adapter. A launcher and adapter (figure 16-38) are attached to each side of the helicopter fuselage. Each launcher contains four six rocket modules which are attached to the adapter assembly. All modules are interchangeable with respect to attachment points and alignment. Switch boxes are on top of the module on the left-hand side of the helicopter (looking down range) and on the bottom on the right-hand side. The adapter assembly is an open, rectangular, aluminum frame which is attached to the crank by means of two explosive bolts.

16-82. Removal — Launcher and Adapter. a. Remove all unfired rockets (paragraph 16-78).

b. Disconnect electrical connectors from explosive bolts, adapter assembly and switch box on inside module. Cap or cover connectors to prevent entrance of foreign material.

c. Remove module assemblies by pulling attachment pins.

d. Cut lockwire and remove two explosive bolts attaching adapter assembly to crank assembly. Remove adapter assembly.

16-83. Cleaning — Launcher and Adapter. Launcher tubes should be cleaned, after each day's firing, with bore cleaner, or hot, soapy water. The firing contacts should be examined after each day's firing and thoroughly cleaned. Wipe the firing contacts with waste or rags soaked in bore cleaner until clean of all residue. Use a wire brush to aid in cleaning the firing contacts.

WARNING

Cleaning materials are flammable and toxic. Avoid skin contact and breathing of solvent vapors.

CAUTION

Petroleum products such as bore cleaner, dry cleaning solvent, mineral spirits paint thinner and lubricants may damage electrical components, wiring, and rubber parts.

16-84. Installation — Launcher and Adapter. **a.** Position adapter assembly to crank assembly and install attaching explosive bolts. Lockwire C155) bolts.

b. Assemble module assemblies to adapter assembly with attachment pins.

c. Uncap or uncover electrical connectors and connect connectors to switch box on inside module and to adapter assembly.

NOTE

Do not connect electrical connectors to explosive bolts until just before flight.

16-85. ADJUSTABLE LINK, ACTUATOR BRACKET AND CRANK ASSEMBLY.

16-86. Description — Adjustable Link, Actuator Bracket and Crank Assembly. Each launcher has an adjustable link (figure 16-38) with the forward end mounted in a yoke formed by the upper end of the crank and the plate and spacer assembly. The aft end of the adjustable link is pinned to the actuator bracket. The actuator bracket is an open box type structure with extended sides which form lugs for pinning the aft end of the adjustable link to the aft end of the crossbeam. The actuator bracket also receives the threaded ends of the adjustable backup bearings. The crank assembly is an aluminum box section unit. In conjunction with a steel shaft, bearings and other miscellaneous components, the crank assembly is attached to the crossbeam of the external stores support and serves as the mounting point for the adapter assembly.

16-87. Removal — Adjustable Link, Actuator Bracket and Crank Assembly.

CAUTION

Ensure all power is off.

a. Remove launcher and adapter (paragraph 16-82).

b. Cut lockwire and remove bolt attaching the forward end of the adjustable link to the yoke formed by the upper end of the crank and the plate and spacer assembly.

c. Remove nut, washer and bolt attaching aft end of the adjustable link to the actuator bracket. Remove adjustable link.

d. Remove teflon bearings from threaded holes in actuator bracket.

e. Remove nut, washers and bolt attaching actuator bracket to aft end of crossbeam and remove actuator bracket. Reinstall bolt, washers and nut to attach crossbeam to aft support.

f. Cut lockwire and remove four nuts, washers and bolts attaching stop brace and bracket to plate and spacer assembly. Remove bracket.

g. Cut lockwire and remove four bolts attaching stop brace to crank assembly. Remove stop brace.

h. Remove crank shaft retainer nut from outboard end of crank shaft and remove keeper, key, crank assembly, bearing retainer and roller bearing from crossbeam.

i. Remove crank shaft, with keeper, plate and spacer assembly, key, bearing retainer and roller bearings, as a unit from the inboard side of the crossbeam.

j. Remove nuts, washers, and bolts attaching bearing housings to the external stores support crossbeam and remove bearing housings.

16-88. Installation — Adjustable Link, Actuator Bracket and Crank Assembly. a. Position bearing housings to external stores support crossbeam and install attaching bolts, washers, and nuts.

b. Assemble roller bearings, bearing retainer, short key, plate and spacer assembly (with flat side outboard), and keeper to the end of the crank shaft which has the short keyway. Secure loosely with shaft retainer nut.

c. Insert the items assembled in step b. above into the external stores support crossbeam in such a manner that the plate and spacer assembly is on the inboard side of the crossbeam.

d. Assemble roller bearing, bearing retainer, crank assembly, long key, keeper, and shaft retainer nut to outboard end of crankshaft.

e. Tighten both retainer nuts until there is no looseness but crankshaft rotates freely. Lock both nuts with tangs of keepers.

f. Align one end of stop brace with crank assembly so that stop brace is above crossbeam. Install four bolts to attach stop brace to crank assembly and lockwire (C157).

g. Position bracket and other end of stop brace to plate and spacer assembly. Install four attaching bolts, washers, and nuts and lockwire (C157).

h. Remove nut, washers, and bolt attaching external stores support crossbeam to aft support. Position actuator bracket to aft end of crossbeam and install bolt, washers, and nut previously removed.

i. Install teflon backup bearings in threaded holes. Torque front and bottom rear bearings one turn. Torque top rear bearing one and one-half turns. Starting point for these torque values is 0.002 inch between the bearing arc and the teflon backup bearing.

j. Position aft end of adjustable link to actuator bracket and install attaching bolt, washer, and nut.

k. Position forward end of adjustable link to the yoke formed by the upper end of the crank and the plate and spacer assembly. Install attaching bolt and lockwire (C157).

16-89. PANEL ASSEMBLY – ARMAMENT CONTROL.

16-90. Description — Armament Control Panel Assembly. The armament control panel (figure 16-38) is located in the lower left-hand corner of the pedestal. The controls necessary for jettisoning the two pod assemblies, for turning on system power, for selecting the number of pairs of rounds, and the SAFE-ARMED switch are located on the panel. It also contains a counter to record the number of pairs of rounds fired, a SYSTEM POWER ON light, an ARMED light, a ZERO light, a SAFE light, a JETTISON POWER ON light, and a JETTISON COMPLETE light.

16-91. Removal — Armament Control Panel Assembly. a. Make sure that the helicopter master battery switch is in the OFF position and that external power is disconnected.

b. Release quick-disconnect fasteners attaching armament control panel assembly to pedestal and carefully raise panel assembly from pedestal.

c. Disconnect electrical connectors at back of panel and remove panel assembly. Cap or cover electrical connectors to prevent entrance of foreign material.

16-92. Installation — Armament Control Panel Assembly. a. Uncap or uncover electrical connectors and connect to back of control panel assembly.

b. Position control panel assembly in pedestal and engage quick disconnect fasteners.

16-93. PANEL ASSEMBLY — SIGHT LIGHT.

16-94. Description — Panel Assembly Sight Light. The sight light panel assembly is located in the lower left-hand corner of the pedestal just forward of the armament control panel. The purpose of this panel is to control the power to the Mark 8 sight lamp. This action, as well as the intensity of illumination, is accomplished by means of a rheostat. The sight lamp has two filaments, either of which may be used for illumination. A switch on the sight light panel assembly affords the operator a choice of FIL 1 or FIL **2.** The panel also is equipped with two standard panel lights.

16-95. Removal — Panel Assembly Sight Light.

CAUTION

Ensure all power is off.

a. Make sure that the helicopter master battery switch is in the OFF position and that external power is disconnected.

b. Release quick-disconnect fasteners attaching armament control panel assembly to pedestal and carefully raise panel assembly from pedestal.

c. Disconnect electrical connectors at back of panel and remove panel assembly. Cap or cover electrical connectors to prevent entrance of foreign material.

16-96. Installation — Panel Assembly Sight Light. a. Uncap or uncover electrical connectors and connect to back of control panel assembly.

b. Position control panel assembly in pedestal and engage quick-disconnect fasteners.

16-97. SIGHT ASSEMBLY – MARK 8.

16-98. Description — Sight Assembly Mark 8. The pilot sight (figure 16-38) is used as an aid in maintaining alignment of the helicopter with the target during firing of a missile. The sight is mounted on a support assembly, attached to the right-hand side of the instrument panel, in front of the pilots seat. The pilot sight consists of a sight body, a lamp and housing, and a Mark 4 Mode O reflector assembly. A small control panel on the center console contains an FIL 1 — FIL 2 switch and an intensity control for illumination of the reticle.

16-99. Removal — Sight Assembly Mark 8. a. Remove four nuts and bolts attaching pilot sight (1 O, figure 16-38) to support assembly, and remove pilot sight.

CAUTION

The pilot sight is a delicate, optical instrument. Handle with care.

b. Remove five nuts, washers, and screws attaching pilot sight support assembly to right-hand side of instrument panel, and remove support assembly.

16-100. Installation — Sight Assembly Mark 8. a. Position pilot sight support assembly on instrument panel and install attaching screws, washers, and nuts.

b. Position pilot sight (10, figure 16-38) against support assembly and install attaching bolts and nuts.

16-101. ARMAMENTJUNCTION BOX.

16-102. Description — Armament Junction Box. The junction box (12, figure 16-38) connects to electrical connector at center of pylon in cabin and contains the circuits necessary for firing the rockets and for jettisoning the two pod assemblies. It also contains a RESET button which cycles the stepping switch to zero and a zero light which illuminates when stepping switch is in zero position.

16-103. Removal — Armament Junction Box. a. Ensure the battery switch is in the OFF position and external power is disconnected.

b. Disconnect electrical connectors from junction box and cap or cover to prevent entrance of foreign material.

c. Remove six bolts and washers attaching junction box to shelf assembly and remove junction box from helicopter.

16-104. Installation — Armament Junction Box. a. Position junction box in helicopter and install six attaching washers and bolts.

b. Uncap or uncover electrical connectors and connect to junction box.

16-105. BLOOD BOTTLE HOOKS.

16-106. Description — Blood Bottle Hooks. Six blood bottle hooks (three on each side) are mounted in the cabin roof structure within easy reach of the medical attendant station, to permit administering blood or glucose to litter patients in flight,

16-107. Inspection — Blood Bottle Hooks. Inspect blood bottle hooks for damage and security of mounting.

16-108. Repair or Replacement — Blood Bottle Hooks. a. Tighten or reinstall loose or improperly installed hooks.

b. Replace damaged hooks.

16-109. CABLE – PARATROOP STATIC LINE.

16-110. Description — Paratroop Static Line. A paratroop static line cable may be installed on the center of the aft cabin bulkhead. This installation consists of a cable (1, figure 16-39), a compression tube (2), attach plates (3), fitting (4), and attaching hardware.

16-111. Removal — Paratroop Static Line. a. Remove cotter pins and washer attaching cable (1, figure 16-39) to fitting (4) and remove cable.

b. Remove nuts, washers, and bolts securing attach plates (3) to fittings (4) and remove attach plates

c. Remove bolts and washers securing fittings (4) to aft cabin bulkhead and remove fittings and compression tube (2) from bulkhead.

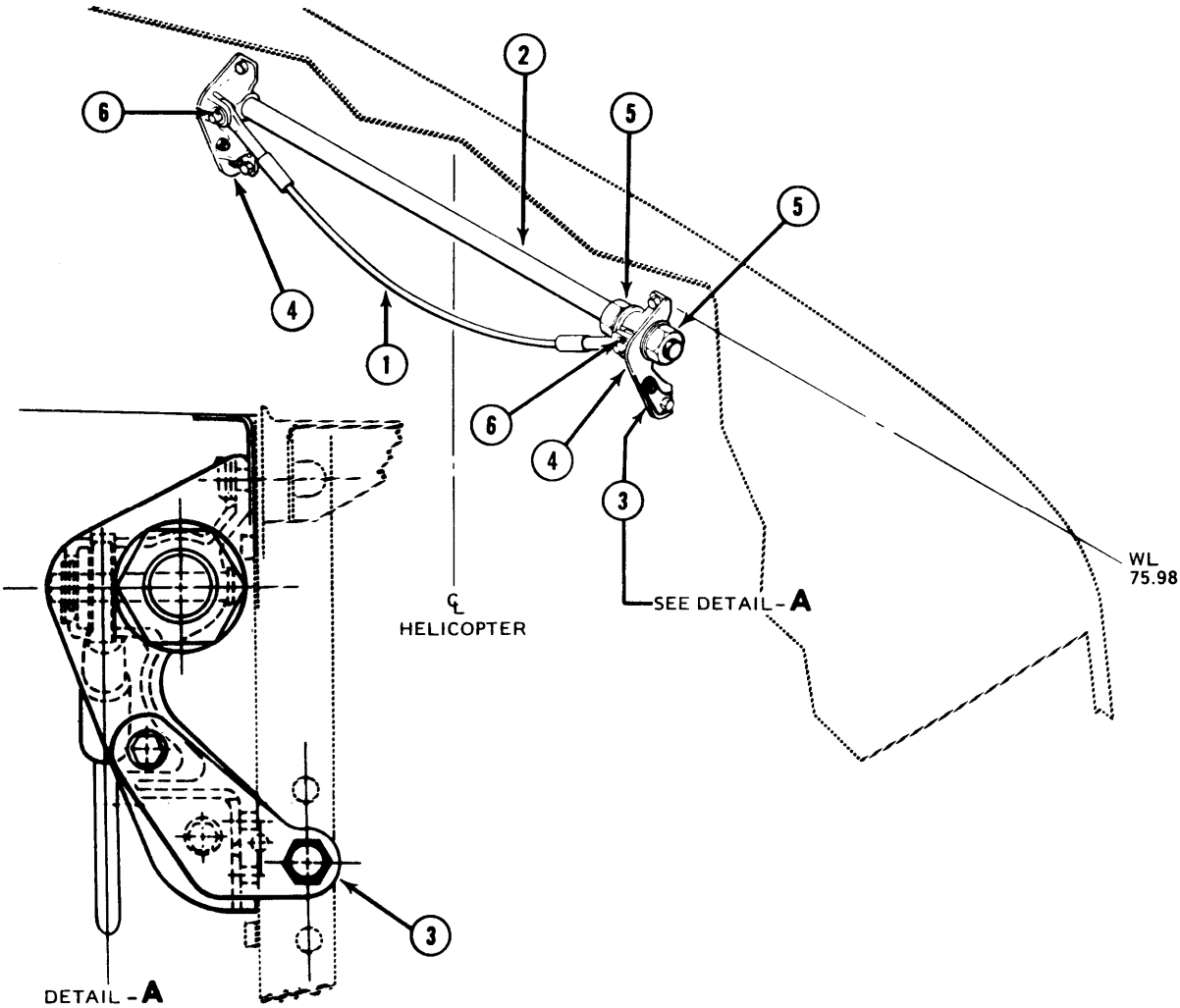

1. Static line cable
2. Compression tube
3. Attach plates
4. Fittings
5. Nuts
6. Pins

Figure 16-39. Paratroop Static Line Cable

d. Remove nuts (5) and washers on end of compression tube (2). Remove pins (6) from compression tube and separate tube from fittings (4).

16-112. Installation — Paratroop Static Line. a. Install nut (5, figure 16-39), lockwasher, and flat washer on compression tube (2). Position fittings (4) on compression tube. Align holes in tube and fittings and insert pins (6).

b. Position static line cable (1) on pins (6) and install washers and cotter pins.

c. Install flat washer, lockwasher, and nut (5) on end of compression tube.

d. Position compression tube (2) and fittings (4) to aft cabin bulkhead and install attaching washers and bolts. Tighten both nuts (5) on compression tube against fitting.

e. Position attach plates (3) to fittings (4) and install bolts, washers, and nuts.

16-113. M130 Countermeasures Dispensing Set (figure 16-41). (If installed).

a. The M-130 Dispenser Set is a countermeasures system provided to defend against threats provided to defend against threats from antiaircraft missiles. The dispensers, attached to supports mounted on the left and right aft external fuselage hardpoints, dispense chaff to prevent or hinder lockon by radar guided systems, or flares to decoy heat-seeking (infrared) guided missiles. Either flares or chaff can be dispensed from the right side dispenser. Only chaff can be dispensed from the left side dispenser.

b. The system is made up of two interchangeable dispenser assemblies with a 30 cartridge payload for each; a control panel mounted on the cockpit pedestal; support assemblies that mount the dispensers on the aircraft; and an electronic module and associated wiring. A safety pin and flag is provided to prevent inadvertent actuation of the system.

16-114. Removal - Right Side Support Assembly (figure 16-42).

a. Disconnect cable assembly (4) from access panel (7).

b. Remove nuts (11 and 21) and spacers (10 and 20) from threaded studs on support assembly (3).

NOTE

Mount (6) remains installed on aircraft.

c. Remove nut (15) washers (14) and bolt (13) securing support assembly to mount (6).

CAUTION

To be sure support assembly dimensions are not distorted, side loads must not be applied to threaded studs during removal.

d. Slide support assembly (3) aft. Retain spacers (10 and 20) for later use.

16-115. installation - Right Side Dispenser Support Assembly (figure 16-42).

a. Remove access panel (55, figure 2-18).

b. Place one spacer (10 and 20, figure 16-42) over each threaded stud on support assembly (3).

c. Position studs through mounting holes on fuselage hard points (9 and 19). Place one spacer (10 and 20) on each threaded stud and install nuts (11 and 21). Torque nuts 57 TO 63 inch-pounds and install cotter pins (12)

NOTE

Mount (6) must be aligned and drilled before installation. After initial installation, mount remains on aircraft.

d. Position the mount against the fuselage over the four nutplates at the forward edge of the access opening (FS166.4). Make sure the edge distance from the nut plate to the top edge of the mount is 5/16 inch, and the mount is centered vertically over the nutplates.

NOTE

The undrilled boss on the mount (6) should make contact with the bracket on the support assembly (3). if the surfaces of the boss and the bracket are not parallel, the mount maybe repositioned slightly, or material may be removed from the mount (6) boss.

e. Using a c-clamp or equivalent, clamp mount (6) and support assembly (3) together at boss to bracket mating surface.

NOTE

Make sure mounting bolt head (8) to mount (6) clearance is adequate.

f. Scribe the position of the two center access opening nutplates on the fuselage to mount (6) mating surface.

g. Unclamp the mount and drill two .203 diameter holes at the scribed marks.

h. Install mount using two bolts (8) and washers (23). Scribe the position of the upper and lower nutplates on the mount. Remove the mount and drill a .203 diameter hole at each scribed mark.

i. Reinstall the access panel leaving vacant the four nutplates along the forward edge that correspond with the mount (6) mounting holes.

j. Install mount (6) with four bolts (8) and washers (23). Torque bolts to 30 inch-pounds and lockwire (C155) bolts in pairs.

k. Drill a .266 diameter hole in the mount (6) boss to lineup with existing hole in bracket.

l. Install bolt (13) washer (14), and nut (15). Torque nut and secure with cotter pin (16).

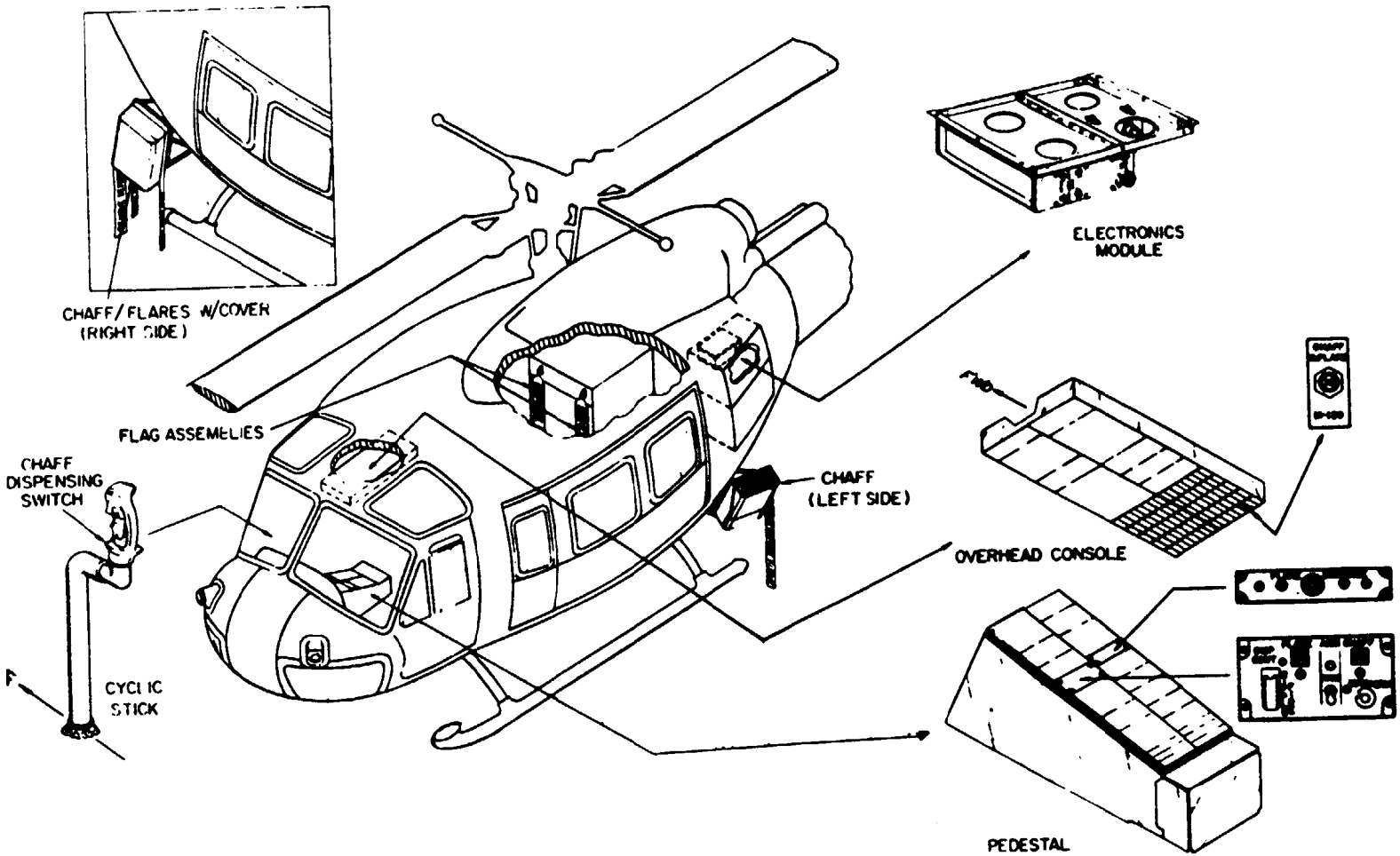

Figure 16-41. M130 Flare/Chaff Dispensing System EB

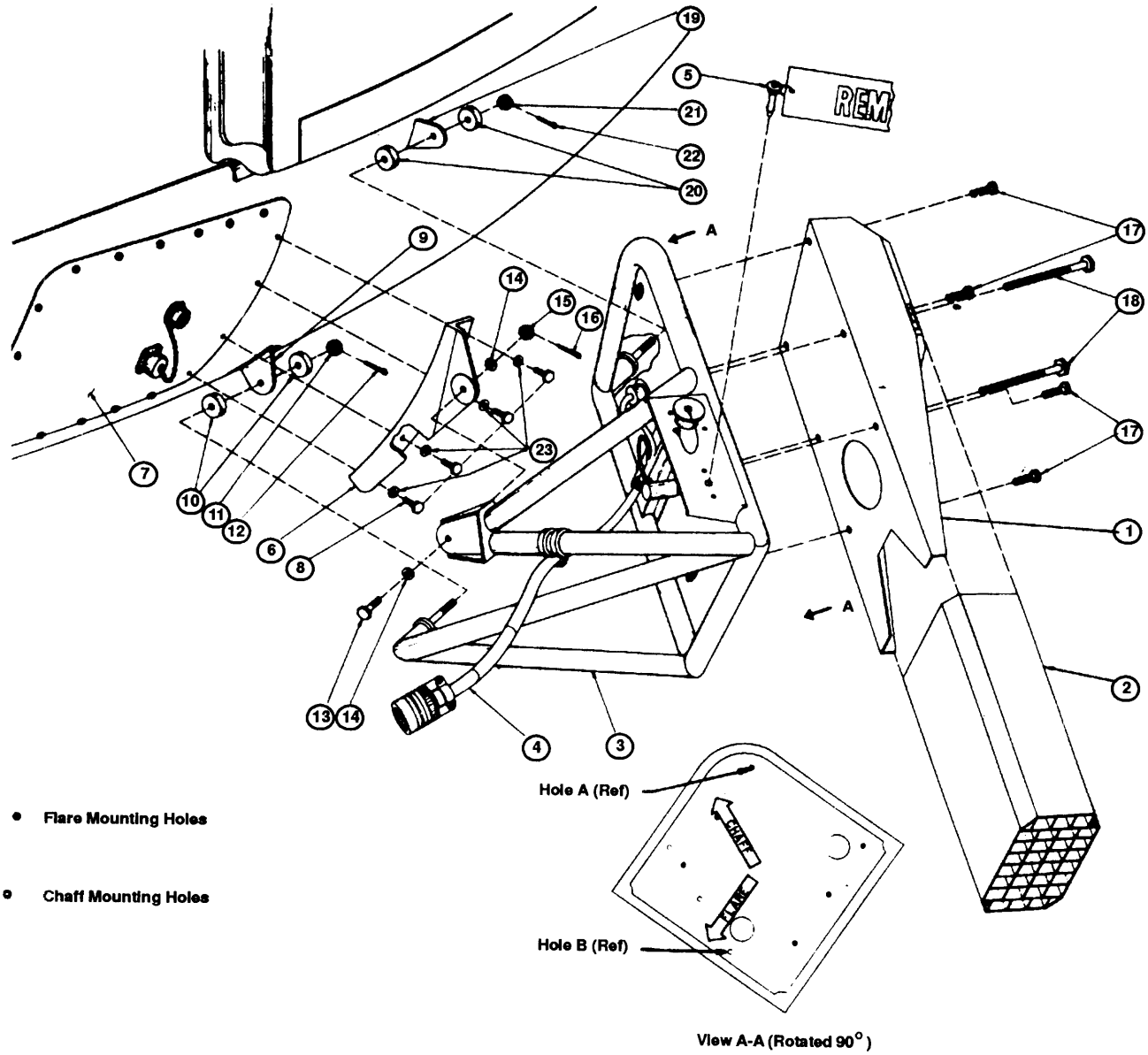

● Flare Mounting Holes

○ Chaff Mounting Holes

1. Dispenser assembly
2. Payload module assembly
3. Support assembly
4. Cable assembly
5. Safety pin and flag
6. Mount
7. Access panel assembly
8. Bolt
9. External stores hardpoint
*10. Spacer
11. Nut
12. Cotter pin
13. Bolt
14. Washer
15. Nut
16. Cotter pin
17. Screw
18. Bolt
19. External stores hardpoint
20. Spacer
21. Nut
22. Cotter pin
23. Washer

‘Additional washers may be needed to take up slack between hardpoint and support assembly (3).

Figure 16-42. Flare/Chaff Support Assembly-Removal and Installation.

16-116. Installation — Flare Dispenser Assembly to Right Side Dispenser Support (figure 16-42). a. Remove payload module assembly (2) from dispenser assembly (1). Refer to TM 9-1095-206-13 and P.

b. Align dispenser assembly (1) with arrow marked FLARE on dispenser support (3).

c. Insert bolt (17) in upper left corner of dispenser assembly (1) and hole A shown on view A.

d. Position dispenser assembly (1) until assembly mounting holes line up with mounting holes on dispenser support assembly (3).

e. Install remaining bolts (17 and 18) and torque 57 to 63 inch-pounds.

f. Connect cable assembly (4) to receptacle on access panel (7).

g. Install payload module (2) on dispenser support (1). Refer to TM 9-1095-106-13 and P.

16-117. Installation — Chaff Dispenser Assembly to Right Side Dispenser (figure 16-42). a. Remove payload module assembly (2) from dispenser assembly (1). Refer to TM 9-1095-206-13 and P.

b. Align dispenser assembly with arrow marked CHAFF on dispenser support (3).

c. Insert bolt (17) into lower right corner of dispenser assembly and hole B shown on View A.

d. Position dispenser assembly (1) until assembly mounting holes line up with mounting holes on dispenser support assembly (3).

e. Install remaining bolts (17 and 18) and torque 57 to 63 inch-pounds.

f. Connect cable assembly (4) to receptacle on access panel (7).

g. Install payload module (2) on dispenser support (1). Refer to TM 9-1095-206-13 and P.

16-118. Removal — Left Side Support Assembly (figure 16-43). a. Disconnect cable assembly (4) from access panel (6).

b. Remove four bolts (7), washers (18), and washers (19, if installed) that secure aft end of support assembly (3) to aircraft.

c. Remove nuts (10 and 14) and spacers (9 and 13) from threaded stud on support assembly (3).

CAUTION

To be sure that support assembly dimensions are not distorted, side loads must not be applied to threaded studs during removal.

d. Carefully slide support assembly (3) aft. Retain spacers (9 and 13) and washers (21) with assembly for future use.

e. Install bolts (7) and washers (18) in forward edge of access panel (6).

16-118.1. Installation — Left Side Dispenser Support Assembly (figure 16-43). a. Locate access panel (51, figure 2-18), and remove four attaching screws from forward edge.

b. Install one spacer (9 and 13, figure 16-43) over each threaded stud on support assembly (3).

c. Position studs through mounting holes on fuselage hardpoints. Place one spacer (9 and 13) on each threaded stud and install nuts (10 and 13). Torque nuts 57 to 63 inch-pounds and install cotter pins (11).

NOTE

If gap exists between support assembly (3) and access door, washers (19) may be used to fill gap.

d. Install bolts (7), washers (18), and washers (19, if required). Lockwire (C 156) bolts (4) in pairs.

e. Connect cable assembly (4) to receptacle on access panel.

f. Refer to TM 9-1095-206-13 and P for functional test.

16-118.2. Electronic Module Assembly (figure 16-44). a. Install the support assembly (2) on the ceiling of the aft radio compartment with six bolts (5). Torque bolts 57 to 63 inch-pounds and lockwire (C 155) in threes.

b. Install the module (1) on the support assembly (2) with bolts (6) and washers (7). Install clamp (4) on the aft outboard corner.

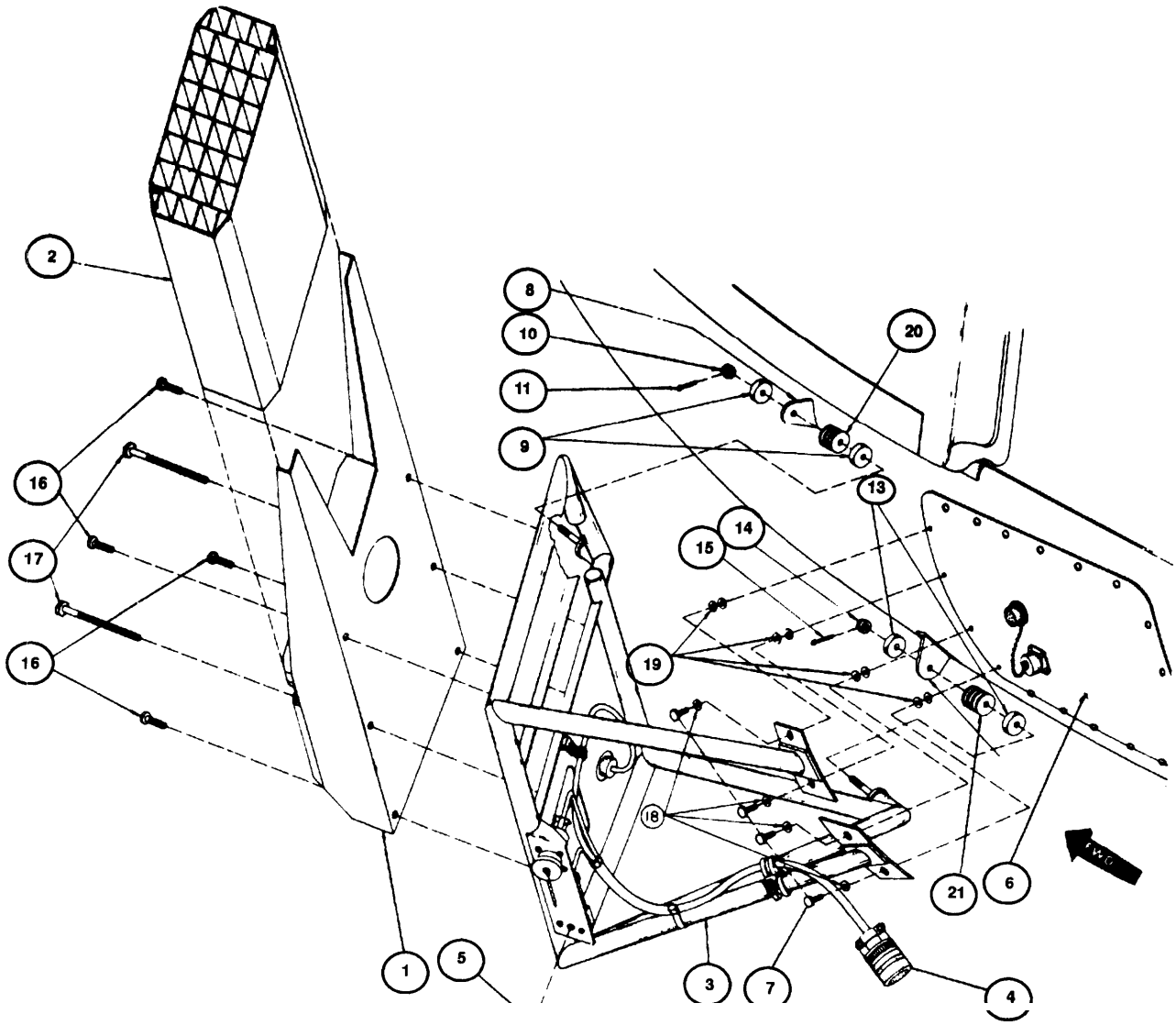

VIEW LOOKING FORWARD --LEFT SIDE

1. Dispenser assembly
2. Payload module assembly
3. Support assembly
4. Cable assembly
5. Safety pin and flag
6. Access panel assembly
7. Bolt
8. External stores fitting (upper)
9. Spacer
*10. Nut
11. Cotter Pin
12. External stores fitting (lower)
13. Spacer
14. Nut
15. Cotter pin
16. Screw
17. Bolt
18. Washer
19. Washer
20. Washer
21. Washer

Figure 16-43. Chaff Support Assembly - Removal and Installation

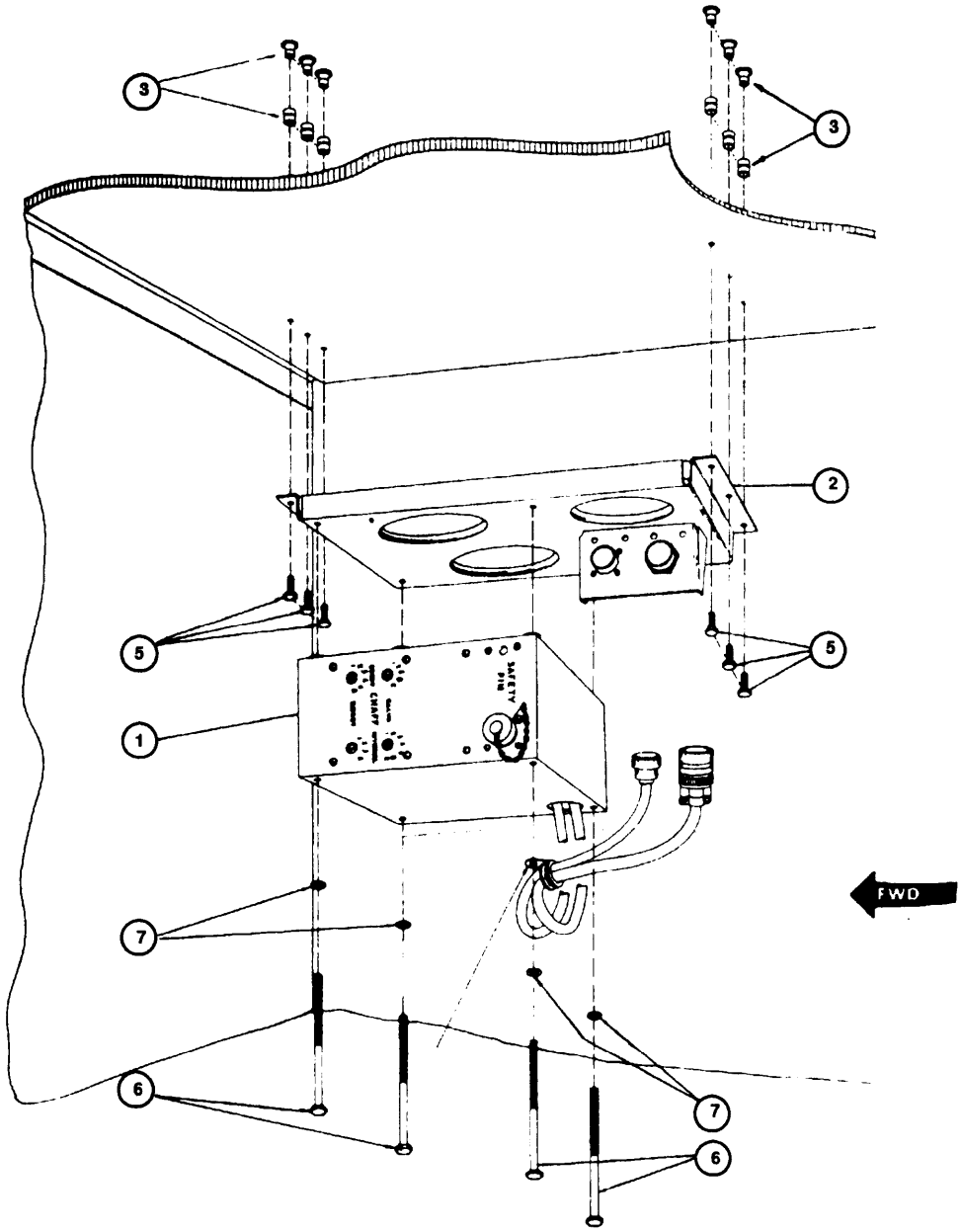

VIEW LOOKING INBOARD – LEFT SIDE

1. Electronics module
2. Support assembly
3. Panel insert
4. Cable damp
5. Bolt
6. Bolt
7. Washer

Figure 16-44. Electronic Module - Removal and Installation.

Pages 16-64 through 16-93/(16-94 blank), including paragraphs 16-119 through 16-147, Figures 16-45 through 16-54 have been deleted.

16-124. X Connector Guard

Description — The connector Guard (Figure 16-48) is installed on the EH-1X aircraft after the AN/ALQ-151 mission cables, exiting from the connector panel, (at Station 129) are in place. The purpose of this item is to protect the cables from damage due to their proximity to the mission operator's feet. This item is designed to withstand the abuse anticipated from use as a footrest.

16-125. Removal Connector Guard Assembly (Figure 16-48)

a. Loosen eight quick-release fasteners that attach connector guard (1) to channel assembly (2) and angle (3).

b. Apply slight pressure to flex connector guard (1) upwards and aft simultaneously and remove.

c. Remove two nuts (8) and two washers (5) securing channel assembly (2).

d. Remove channel assembly (2) and two quick-disconnect type stud fittings (4).

NOTE

Angle (3) must be removed to allow unfastening of insulation blanket. Nut (9) is not a blind type, therefore, a second person is required.

e. Remove screw (12), nut (13) and washer (14).

f. Remove clamp (11).

g. Remove two bolts (7), two washers (6) and two nuts (9).

h. Angle (3) is now free for removal.

16-126. Removal — Base Rack (Figure 16-46)

a. Disconnect cable connections to rack at transmission bulkhead and disconnect panel on base rack.

b. Remove (as a minimum) the following electronic equipment (Figure 16-49). Special removal instructions are described in TM 32-5865-007-20.

(1) Voice Power Sensor (6A6)
(2) Data Power Sensor (7A7)
(3) Indicator Control (6A10)
(4) DF Control (6A11)
(5) Communication Processor (6A12)
(6) Power Supply (6A15)
(7) Power Supply (6A16)
(8) Power Supply (6A17)
(9) System Computer (6A18)
(10) DF Interface (6A19)
(11) RFI Filter (6FL3)

c. Remove (as a minimum), the following electronic equipment (Figure 16-50). Special removal instructions are described in TM32-5865-007-20.

(1) Key Generator (GA3)
(2) Security Computer (6A4)

NOTE

All other equipment may remain in console. Removal of above items, as called out in above two paragraphs, will reduce console weight by about 320 pounds to about 180 pounds.

d. Remove two bolts (16) and two washers (17) that attach base rack to mounting points located on aft bulkhead and one bolt on transmission housing (Figure 16-53).

e. Remove four bolts (16) and four washers (17) that attach base rack to cargo deck (Figure 16-53). Stow hardware for reuse.

f. Remove Base console from Aircraft.

CAUTION

Do not disturb alignment points for this rack.

16-127. Removal — ECM Rack (Figure 16-51)

a. Disconnect all cable connections to console.

CAUTION

Dust Covers should be in place before equipment removal to protect exposed pins and also to ease equipment removal.

b. Connect dust covers to connector shells on all three ECM electronic equipments.

CAUTION

Weight is approximately 100 lbs.

c. Insure that Push-To-Talk connector is removed and remove ECM receiver, (7A1) Figure 16-51 from aircraft.

CAUTION

Weight is approximately 70 lbs.

d. Move ECM power supply (7A2) forward in mounting tray. With about 5 inches of interface available, rotate unit 60 degrees upwards and remove from aircraft.

CAUTION

Weight is approximately 250 lbs.

e. Move ECM Transmitter (7A4) forward in mounting tray. With about 5 inches of interface available, rotate unit 90 degrees upwards and remove from aircraft.

f. Remove bolt (16) and washer (17) that attaches ECM Rack to transmission housing support bracket and stow for reuse.

g. Remove four bolts (16) and four washers (17) that attach ECM rack to cargo deck (see Figure 16-53). Stow hardware for reuse.

CAUTION

Do not disturb alignment points for the ECM rack.

h. Remove ECM rack from aircraft.

16-128. X AN/ASN-86 Inertial Navigation Set Description — The AN/ASN-86 Inertial Navigation System (INS) provides geographical data to the AN/ALQ-151 system. The electronic equipment is located in the left hand cargo bay alcove (Figure 16-52). This system's major components are: gyro (45), computer (40), ARN-103 (41), gyro platform (1), gyro mount (2) and the plenum assembly (3). Refer to TM 11-58841-273-( ) for operation and system trouble shooting.

16-129. X Removal — Support Shelf Assembly (5, Figure 16-52)

a. Disconnect cable connectors to computer (40) and ARN-103 (41).

b. Disconnect quick release fittings at lower face of computer (40) and ARN-103 (41).

c. Disconnect upper portion of cooling hose (12) attached to duct (28) on bottom of computer by releasing clamp (13).

d. Remove computer and ARN-103 by sliding units forward.

e. Disconnect cable connectors to junction box (4) Figure 16-52.

f. Screws (7) and (12) need not be removed to remove junction box (4).

g. Remove cooling hose (12) by loosening clamp (13) to plenum assembly (3).

h. Remove two screws (10), and two washers (8) that secure bracket (stiffener) (6) to support shelf assembly (5).

i. Remove two screws (11), and two washers (3) that secure junction box (4) to support shelf (5).

j. Junction Box (4) with bracket (stiffener) (6) and angle (29) attached are now free for removal.

k. Remove cooling hose (14) by loosening two clamps (13).

l. Refer to Figure 16-52 and remove bolt (22) and washer (21) attaching support shelf assembly leg (18) to cargo deck plate (23).

m. Remove seven bolts (42) and (44) and seven washers (43) attaching support shelf assembly (5) to transmission and aft bulkheads.

n. Support shelf assembly (5), with leg (18) attached, is now free for removal.

16-130. X Removal — AN/ASN-86 gyro (MX-8123).

CAUTION

Allow a minimum period of one hour to elapse following INS turn-off before attempting removal of gyro. Earlier removal could cause damage to gyro mechanism.

a. Disconnect connector (48), at lower face of gyro (47) (figure 16-52).

b. Loosen the screw clamps (46) on the mount (1) and swing the clamps away from the platform mounts.

c. Carefully lift and remove the gyro (45) from the mount (1).

16-131. X Removal — AN/ASN-86 gyro platform mount MT-4447 (figure 16-52).

CAUTION

Removal of the gyro platform mount is not authorized without proper re-alignment equipment.

a. Before removing gyro mount platform, MT-4447 (1), an aircraft center line reference must be obtained so that the gyro axis may be maintained upon reinstallation. The following parameters must be held in tolerance:

(1) Roll Axis: 0 Degrees, 60 Seconds
(2) Pitch Axis: 0 Degrees, 6 Seconds
(3) Yaw Axis: 0 Degrees, 20 Seconds

b. Use a transit and determine the location of a fore/aft centerline across two common planes on the two MT-4447 V-blocks (46).

c. Attach plumb lines at the aircraft nose center point and from the tailboom skid.

d. Use a transit and reference the aircraft center line with the MT-4447 axis. Retain for future use.

e. Remove cooling hose (14) from gyro platform mount (1) by loosening clamp (13).

f. Scrape away sealing wax from mounting bolt heads (33).

g. Remove three bolts (33) and three washers (34) that secure the gyro platform mount (1) to the gyro mounting interface (2).

h. Remove gyro platform mount.

i. Remove bolt (35) and washer (36).

j. Remove five bolts (37) and five washers (36).

k. Remove gyro mount interface.

16-132. Removal — Bulkhead/Cargo Deck Interface.

CAUTION

Do not remove following items unless absolutely required. Realignment of all racks/consoles is required upon installation.

a. Perform the following steps for removal of the twelve console/rack mounting points.

b. Bend tab down on washer (18, Figure 16-53) and remove nut (24).

c. Cut safety wire (19) and remove four screws (21) and four washers (34).

d. Remove brackets (23) and nut plate (22).

e. Remove deck/bulkhead fitting [with foot (20) attached] from aircraft.

f. Remove other supports/brackets from bulkheads as required.

CAUTION

Remove bow handle from right side transmission housing before removing access panel.

16-133. X Installation; AN/ALQ-151 Mission Consoles/Racks. The following sequence should be followed to efficiently install all consoles/racks upon the cargo deck area (Figure 16-46). This equipment is designed to be installed on uneven and dimensionally inconsistent aircraft cargo deck surfaces.

a. Install bulkhead interface, paragraph 16-135 (Figures 16-52 & 16-53)

b. Install navigation rack, paragraph 16-136 (Figure 16-52)

c. Install ECM Rack, paragraph 16-140 (Figure 16-51)

d. Install base rack, paragraph 16-141 (Figures 16-49 & 16-50)

e. Install cable Guard, paragraph 16-142 (Figure 16-48).

f. Install operator seat, paragraph 16-143 (Figure 2-48.10).

g. Install operator console, paragraph 16-144 (Figure 16-53).

16-134 Pre Installation Instructions.

CAUTION

Prior to installation, check all equip ment installation points in the aircraft to assure that all fasteners are of the type and size specified in Table 16-1, and are in working order. Check for damage to cargo deck and bulkhead surfaces.

a . All of the airframe mounting points are shown on Table 16-1 and the Deck Mounting Points are illustrated on Figure 16-53, Sheet 5.

b. Tools and installation equipment required. Consoles/racks can be installed using standard tools. However eight spacers are required of material (aluminum, wood, etc.) capable of supporting the racks. Approximate dimensions are: 0.75 thick, 0.75 to 2.00 wide, and 3.00 to 4.00 long.

16-135. Installation — Bulkhead Interface

CAUTION

Insure that proper length base mounting sections are installed so the support shelf (5) mounting bolts remain normal to bulkhead. Place a straightedge horizontally across support shelf (5) screw holes to insure that these holes will line up with those on the support shelf.

a. Install three base mounting (hat) sections (15), (16) and (17), Figure 16-52, to left aft bulkhead at station 166 using six bolts (20) and six washers (21), at positions 28 through 33 (Table16-1).

b. Installation of support brackets (do not torque fully at this time) to transmission housing using attachment positions 9 thru 20 (Table 16-1).

(1) Install vertical supports (1 and 2, Figure 16-53) with two spacers (3) in place. Use two bolts (7), two plain washers (9) and two lock washers (8) for aft points on angles. See details H and Q.

CAUTION

Always position lock-washers under bolt heads with plain washers on other side.

(2) Use eight screws (15) eight plain washers (12) and eight lock washers (13) with eight spacers (4) to attach remaining areas of vertical supports.

CAUTION

Do not fully tighten mounting bolts at this time. Some parts may require relative adjustment during later stages of the console/rack installation.

(3) Install horizontal supports (6) (Figs. 16-53 details F and G) with two spacers (5) in place by using two bolts (10), two plain washers (9) and two lockwashers (8). install four bolts (11), four plain washers (12) and four lockwashers (13) to complete assembly. (Shown on details H and Q).

c. Installation aft bulkhead support (position numbers 21 through 24 (Table 16-1) in accordance with Figure 16-53, details N and P.

(1) Install brackets (14) to right side aft bulkhead using four bolts (7), four plain washers (9) and four lockwashers (8).

(2) Do not torque bolts at this time to allow for further alignment during the console\rack installation. Station 150 with eleven screws (24).

16-136. Installation — Navigation Rack (Figure 16-52).

a . Install new plate (23) on cargo deck at station 150 with eleven screws (24).

b. Assemble support leg (18) to support shelf (5) by using two bolts (19) and two washers (21).

CAUTION

Position plenum assembly so that cooling ducts point forward and outboard.

c. Attach plenum assembly (3) to support shelf (5) by using twelve screws (25) and twelve washers (26).

d. Secure support shelf (5) to transmission and aft bulkheads by using five bolts (42) and (44) and five washers (43). Bolt (44) uses positions 26 and 27 on Table 16-1 Bolt (42) uses positions 2, 29 and 30.

e. Secure support leg (18) to cargo deckplate (8) at position 40 (Table 16-1) using bolt (22) and washer (21).

f. Secure cooling hose (14) to gyro platform by using clamp (13), washers (8).

g. Secure two channel supports (30) to junction box (4) with three screws (32) and three washers (31).

h. Secure two angles (29) to both channel supports (30) with two screws (12) and two washers (8).

i. Secure bracket stiffener (6) to junction box (4) using two screws (7), two washers (8), and two nuts (9).

j. Secure above assembly to support shelf (5) by tightening four screws (10) (11) with four washers (8).

k. Install computer (40) and ARN-103 (41) by sliding units aft in their mounting trays. (Sheet 2).

l. Pass cooling hose (12) through proper lightening hole in bracket (6).

m. Secure cooling hose (12) to duct flange (28) by tightening clamp (13).

n. Secure other end of cooling hose (13) to plenum assembly (3) by tightening clamp (13).

o. Secure quick release fittings at lower face of computer and ARN-103.

p. Secure cable connectors to computer and ARN-103.

16-137. X Installation — gyromount interface (2, figure 16-52).

a. Insure that angle (38) is secured to gyromount interface (2) with two screws (39).

b. Install gyromount interface (2) to cargo deck by using bolt (35), washer (36) along with five bolts (37) and five washers (36).

16-138. X Installation — AN/ASN-86 gyro platform mount, (Figure 16-52).

CAUTION

Insure that all mating surfaces under MT-4447 are clean to avoid alignment problems.

a. Loosely attach MT-4447 (1) to gyromount interface (2) by using three bolts (33) and three washers (34)

CAUTION

Use same plumb locations as those in paragraph 16-131.

b. Use a transit and sight in across two common planes on the MT-4447 V-Blocks [Sheet ?? (46)] and turn the MT-4447 (1) about its vertical axis to a point where angle with aircraft centerline is identical with that found in procedure in paragraph 16-131.

c. Tighten and torque three bolts (33).

d. Seal area around bolt threads with wax type sealant.

e. Attach cooling hose (14) to mount (1) by tightening clamp (13).

16-139. X Installation — AN/ASN-86 gyro MX-8123) (45, figure 16-52, Sheet 4).

a. Carefully place the MX-8123 (45) in the V-Block, (46) of the gyro mount (1).

b. Swing the clamp screws over the gyro mounts and torque screws to **35 to 39** inch-pounds.

c. Connect the connector (48) to lower face position on the gyro (47).

NOTE

If deck access plate must be removed for airframe inspection, do not detach (see figure 16-52) gyromount (1) and gyromount interface (2) from deckplate. Alignment of system will not be lost if airframe mounting surfaces are clean before installing.

16-140. Installation — ECM Rack

NOTE

This rack is shown in position on Figure 16-53 and in detail on Figure 16-51.

a. Assemble deck mounting hardware to four locations as shown on Figure 2-14.3.2. and Table 16-1.

(1) Position Number 3 on Table 16-1 is shown graphically as fitting number 2 on Figure 2-14.3.2.

(2) Position Number 2 on Table 16-1 is shown graphically as fitting number one on Figure 2-14.3.2.

(3) Position Numbers 4 and 5 on Table 16-1 are shown graphically on Figure 2-14.3.2. The attachment to the cargo deck is to a threaded hole, shown as fitting number 3 on Figure 2-14.3.2.

b. Assemble rack mounting hardware to four locations as shown on Figure 16-53.

(1) Position number 2 is shown in detail K.

(2) Position number 3 is shown in detail J.

(3) Position number 4 is shown in detail M.

(4) Position number 5 is shown in detail L.

c. Position four 0.75 thick spacers, paragraph 16-134.b, on deck under structural areas where ECM rack will be located. Care must be taken not to locate spacers where rivet heads or other rack and floor protrusions could interfere with placing the rack level to the aircraft floor.

d. Place ECM rack on top of deck fittings and spacers and adjust leveling foot (20) to meet the floor.

e. Center ECM rack on all four deck attachment points (Positions 2, 3, 4 and 5).

f. Install four mounting screws (16) and four washers (17).

CAUTION

Do not tighten mounting screws, rack position must remain adjustable.

g. Assemble hardware as shown in Figure 16-53 to vertical support (2). (See detail “H”).

h. Check alignment of ECM rack as performed above (step e) to align with vertical support (paragraph 16-135.b (2).) Move vertical support to obtain proper alignment.

i. Torque fasteners, installing vertical support to specifications as shown on Table 16-1.

CAUTION

Do not tighten deck hardware until after console rack alignment is checked.

j. Recheck alignment of ECM Rack with floor points and snug mounting hardware.

16-141. Installation — Base Rack.

N O T E

This rack is shown in position on Figure 16-53 and in detail on Figures 16-49 and 16-50.

a. Assemble deck mounting hardware to four locations as shown on Figure 16-53 and Table 16-1.

(1) Position Number 1 on Table 16-1 is shown graphically as fitting Number 2 on Figure 2-14.3.2.

(2) Position Numbers 6, 7 and 8 are shown graphically on Figure 16-53.

The attachment to the cargo deck is to three threaded holes, shown as fitting Number 3 on Figure 2-14.3.2 and on the cargo fitting as shown as fitting number 2.

b. Assemble rack mounting hardware to four locations as shown on figure 16-53.

(1) Position Number 1 is shown in detail U.
(2) Position Number 6 is shown in detail T.
(3) Position Number 7 is shown in detail S.
(4) Position Number 8 is shown in detail R.

c. Position four 0.75 thick spacers (reference Paragraph 16-134.b.) on deck under structural areas where base rack will be located. Care must be taken not to locate spacers where rivet heads or other rack and floor protrusions could interfere with placing the rack level to the aircraft floor.

d. Place base rack on top of deck fittings and spacers and adjust leveling foot (20) to meet the floor.

e. Center base rack on all four deck attachment points (positions 1, 6, 7 and 8).

f. Install four mounting screws (16) and four washers (17).

CAUTION

Do not tighten mounting screws, rack position must remain adjustable.

g. Assemble hardware as shown in Figure 16-53 to vertical support (1). See detail Q.

h. Assemble hardware as shown in Figures 16-53 (Details N and P) to horizontal brackets (14) on aft bulkhead (right side).

i. Check alignment of base rack as performed above (Step d) to align with vertical support (Figure 16-53). Move vertical support to obtain proper alignment.

j. Torque fasteners, installing vertical support to specifications as shown on Table 16-1.

k. Check alignment of base rack to the aft bulkhead brackets (14).

l. Torque fasteners, installing horizontal bulkhead brackets (14).

CAUTION

Do not tighten deck hardware until after console rack alignment is checked.

m. Recheck alignment of ECM Rack with floor points and snug mounting hardware.

16-142. Installation — Cable Guard. This item will be located at the forward transmission bulkhead between the ECM and Base Racks, (Figure 16-48).

a. Install angle (3) by securing two bolts (7) two washers (6) to two nuts (9) to the forward transmission bulkhead at Station 129.

N O T E

A second person is required because the nut (9) is not a blind type.

b. Install clamp (11) over mission cable with screw (12), washer (14) and nut (13).

c. Snap two quick-release stud fittings (4) to aircraft deck and set channel assembly (2) in place.

d. Secure two nuts (8) and two washers (5) to stud fittings (4).

e. Locate position of connector guard (1) fasteners over mounting points. Work aft fasteners vertically to provide proper seating. Locate forward fasteners in line with their horizontal mating receptacles. Pressure must be applied to flex connector guard (1) so that all fasteners can be seated.

f. Tighten eight fasteners in place on connector guard (1).

16-143. Installation — Operator Seat. This seat is installed on specially designed tracks. The seat faces aft and the installation is shown in position on Figure 16-45 and in detail on Figures 2-44.1 and 2-24.10. Refer to Paragraph 2.252.14 for installation instructions.

16-144. Installation—Operator Console. (Figure 16-46 and Figure 16-47).

a. Install Operator Console through right hand side door opening. Stay close to transmission forward bulkhead. Rotate console a quarter turn to clear base rack. Place console in position over the vibration isolators mounted on the ECM and base racks, (Figure 16-53).

CAUTION

Check to ensure that bonding strap (29) is in proper position relative to vibration isolators (strap is under isolator base).

b. Attach bolt (25) with lock-washer (26) (under bolthead), and plain washer (27) in place loosely at points lettered A through G (Figure 16-53).

c. Check alignment of mounting holes with the isolators installed on the transmission bracket (Detail F and G).

d. Adjust, by slightly shifting base and/or ECM Rack, to center the vibration.

e. Torque all mounting hardware for the base and ECM racks.

f. Adjust the transmission Housing (Figure 16-53, Detail F and G) and ECM rack (Figure 16-53, Detail H) to level the operator console.

N O T E

The exposed shock mount cores should be nearly equal on all mounts. Level may have to be slightly readjusted after loading console.

g. Remove and discard all 0.75 inch thick spacers as installed in Paragraphs 16-104.c. and 16-141.c.

h. Tighten all screws and bolts to torque values of MIL-P-11263 (see Table 16-1).

i. Lock-wire leveling feet (Figure 16-53) in accordance with MS 33540. Nine fittings are located on cargo deck, two on transmission housing and two on the right rear bulkhead.

16-145. Description — Direction Finding (DF) Antenna Assembly, (Figure 2-1.2) Description. The DF antenna set consists of a group of four dipole antennas mounted on four booms projecting from the tail section of the aircraft. Antennas receive RF signals of interest and are positioned so that a number of separate baselines may be formed for DF measurements. Each antenna includes an electronic matching network at the base of the two elements, allowing the use of coaxial cables for the distribution of RF energy.

16-146 Removal — DF Antenna Assembly and Support Boom, Figure 16-54.

CAUTION

Do not attempt to straighten bent antenna elements. Replace entire DF antenna assembly.

a. Remove five screws (5) that secure the DF antenna assembly (1) to the boom (4, 5).

b. Position DF antenna assembly (1) a few inches outboard and disconnect RF cable (2).

c. Remove DF antenna assembly for disposition.

d. Remove four bolts (6) that secure DF antenna support boom (4 and 7) to tailboom interface plates.

e. Remove DF antenna support boom (4 and 7) taking care to feed RF cable (2) through tube.

f. Stow RF cable (2) (loop as required) to avoid damage.

16-147 Installation - DF Antenna Assembly and Support Boom, 16-54.

CAUTION

Forward support boom (4) and aft support boom (7) are not interchangeable.

a. Determine proper boom configuration for installation.

b. Feed RF cable (2) entirely through boom support tube (4 and 7) so that connector exits outside of boom support flange opening.

c. Secure boom support (4 and 7) to tailboom interface plate with four bolts (6). Torque 13 to 17 inch pounds.

d. Position the DF antenna assembly (1) to be installed near the appropriate support boom (4 and 7) on the tailboom.

e. Connect RF Cable (2) to connector (3) on face of DF antenna assembly (1).

CAUTION

Do not pinch or damage RF cable (2).

f. Position DF antenna assembly (1) on the support boom (4 and 7) so that RF connector (3) is located inside the boom.

g. Secure DF antenna assembly (1) to support boom (4 and 7) using six screws (5). Torque the screws to 13 to 17 inch pounds.

TABLE 16-1 (Sheet 1 of 2)

AIRFRAME ATTACHMENT POINTS, EHIX MISSION EQUIPMENT

Pos. No.	LOCATION STA.	BL.	WL.	TYPE	*AREA
1	131.00	39.50R	22.00	CARGO FITTING, STUD	D
2	131,50	18.75L	22.00	CARGO FITTING, RING	D
3	131.00	39.50L	22.00	CARGO FITTING, RING	D
4	98.75	18.50L	22.00	.25-28 UNF THD INSERT	D
5	98.75	40.50L	22.00	.25-28 UNF THD INSERT	D
6	95.50	17.00R	22.00	.25-28 UNF THD INSERT	D
7	95.50	28.25R	22.00	.25-28 UNF THD INSERT	D
8	95.50	42.50R	22.00	.25-28 UNF THD INSERT	D
9	128.35	14.00L	62.20	.31-24 UNF THD INSERT	LT
10	128.52	14.00L	57.10	.31-24 UNF THD INSERT	LT
11	. 128.72	14.00L	51.60	.31-24 UNF THD INSERT	LT
12	128.94	14.00L	45.20	.31-24 UNF THD INSERT	LT
13	130.65	14.00L	53.20	.31-24 UNF THD INSERT	A
14	128.34	14.00R	62.20	.31-24 UNF THD INSERT	RT
15	128.52	14.00R	57.10	.31-24 UNF THD INSERT	RT
16	128.72	14.00R	51.60	.31-24 UNF THD INSERT	RT
17	127.94	14.00R	45.20	.31-24 UNF THD INSERT	RT
18	130.65	14.00R	53.20	.31-24 UNF THD INSERT	B
19	129.00	8.96L	54.40	.31-24 UNF THD INSERT	FT
20	129.00	8.96R	54.40	.31-24 UNF THD INSERT	FT
21	166.00	16.70R	55.40	.31-24 UNF THD INSERT	RB
22	166.00	24.40R	55.40	.31-24 UNF THD INSERT	RB
23	166.00	32.00R	55.40	.32-24 UNF THD INSERT	RB
24	166.00	39.60R	55.40	.32-24 UNF THD INSERT	RB
25	150.00	45.00L	22.00	.25-28 UNF THD INSERT	D
26		14.00L	42.75	.25-28 UNF THD INSERT	LT
27		14.00L	42.75	.25-28 UNF THD INSERT	LT
28	166.00		35.59		LB
29	166.00		35.59		LB
30	166.00		35.59		LB
31	166.00		55.34		LB
32	16600		55.34		LB
33	166.00		55.34		LB
34	134.75	17.25	22.00	.25-28 UNF THD INSERT	D
35	140.29	17,25	22.00	.25-28 UNF THD INSERT	D

TABLE 16-1 (Sheet 2 of 2)

Pos. NO.	LOCATION STA.	BL.	WL.	TYPE	*AREA
36	151.29	17.25	22.00	.25-28 UNF THD INSERT	D
37	134.75	32.25	22.00	.25-28 UNF THD INSERT	D
38	145.75	32.25	22.00	.25-28 UNF THD INSERT	D
39	151.29	32.25	22.00	.25-28 UNF THD INSERT	D
40	150.00	53.00	22.00	.25-28 UNF THD INSERT	D
41	112.00	0.00	22.00	CARGO FITTING STUD	D
42	115.25	10.65R	22.00	CARGO FITTING STUD	D

*Place where located on aircraft as follows:

D = Cargo Deck
FT= Forward Transmission Bulkhead
LT= Left Transmission Bulkhead
RT= Right Transmission Bulkhead
LB= Left Aft Bulkhead
RB= Right Aft Bulkhead
A = Attached to Left Hand Vertical Support Angle
B = Attached to Right Hand Vertical Support Angle

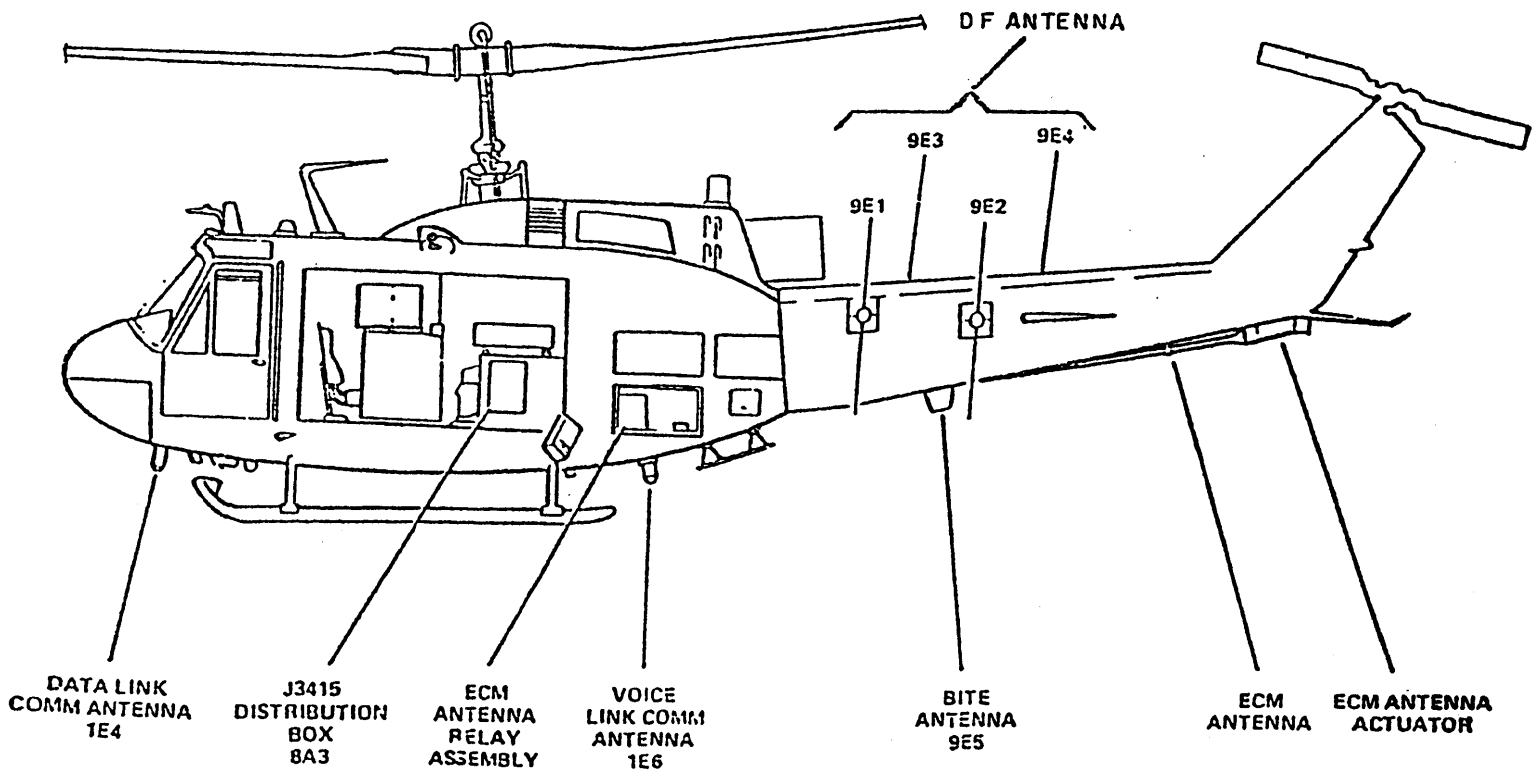

Figure 16-45 Airframe Equipment Locations, Unit 1

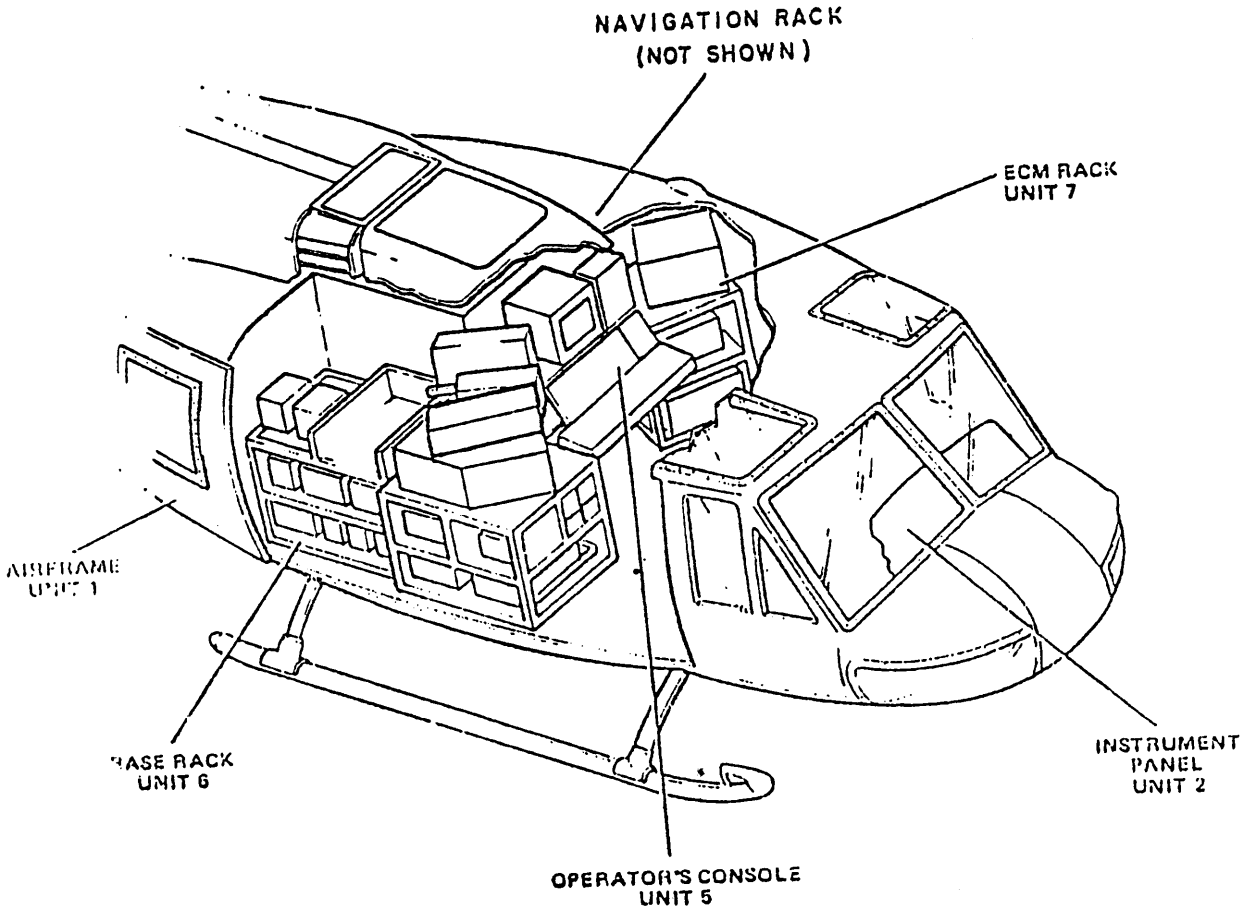

Figure 16-46 EH-1X Equipment Locations

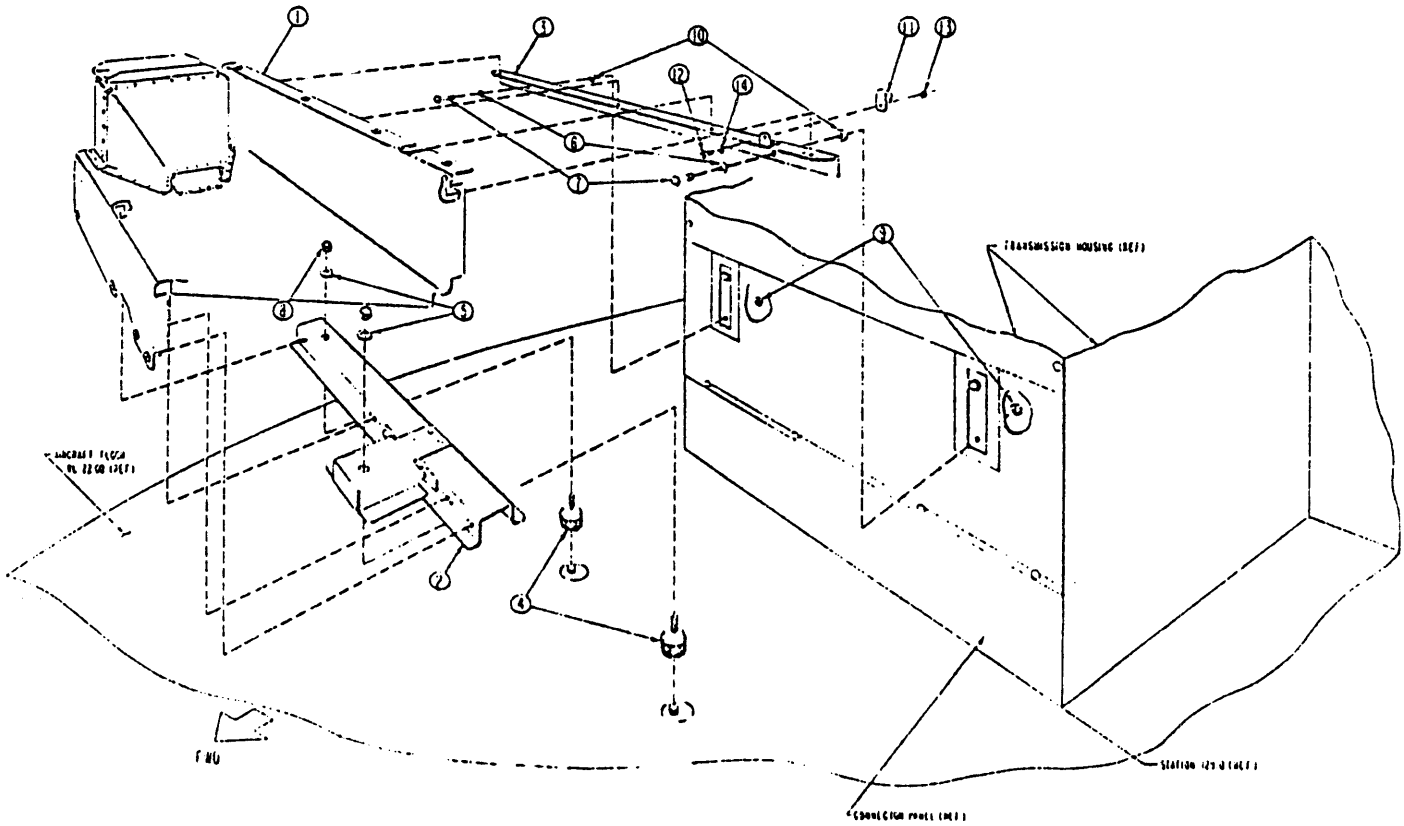

VIEW LOOKING AFT

1. Connector Guard
2. Channel Assy
3. Angle
4. Stud Fitting
5. Washer, Plain
6. Washer, Plain
7. Bolt
8. Nut
9. Nut
10. Spacer
11. Clamp
12. Screw
13. Nut
14. Washer, Plain

Figure 16-48 Connector Guard Installation

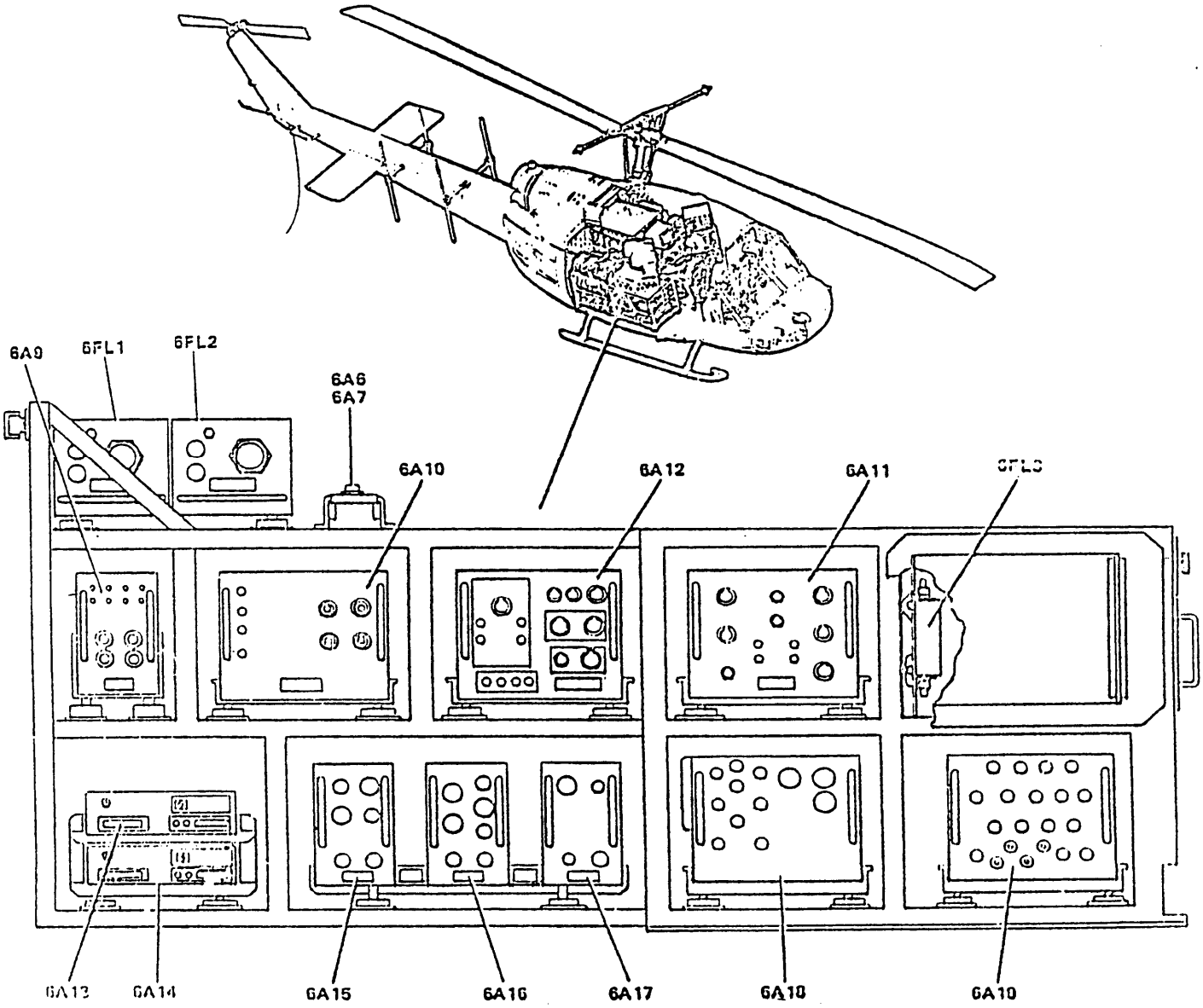

6 A 6 VOICE POWER SENSOR
6 A 7 DATA POWER SENSOR
6 A 9 RF PROCESSOR
6A10 INDICATOR CONTROL
6A11 DF CONTROL
6A12 COMM.PROCESSOR
6A13 INTERCEPT RECEIVER
6A14 DF RECEIVER
6A15 POWER SUPPLY
6A16 POWER SUPPLY
6A17 POWER SUPPLY
6A18 SYSTEM COMPUTER
6A19 DF INTERFACE
6FL1 VOICE FILTER
6FL2 DATA FILTER
6FL3 RFI FILTER

Figure 16-49 Base Rack Equipment Locations (side view), Unit 6

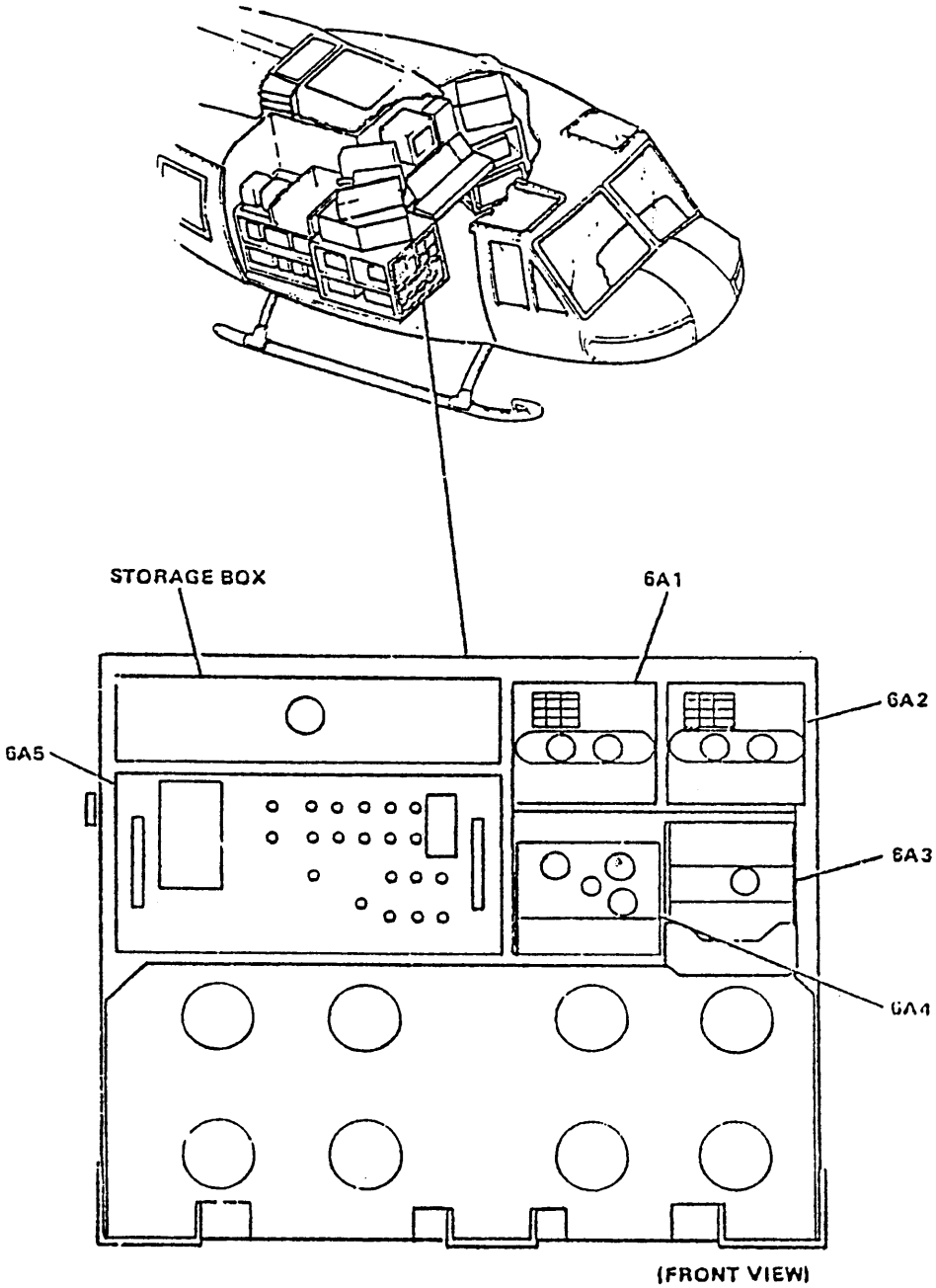

ITEM IDENTIFICATION

6A1	VOICE LINK RADIO
6A2	DATA LINK RADIO
6A3	KEY GENERATOR
6A4	SECURITY COMPUTER
6A5	J-3400 DISTRIBUTION BOX

Figure 16-50 Base Rack Equipment Locations (front view), Unit 6

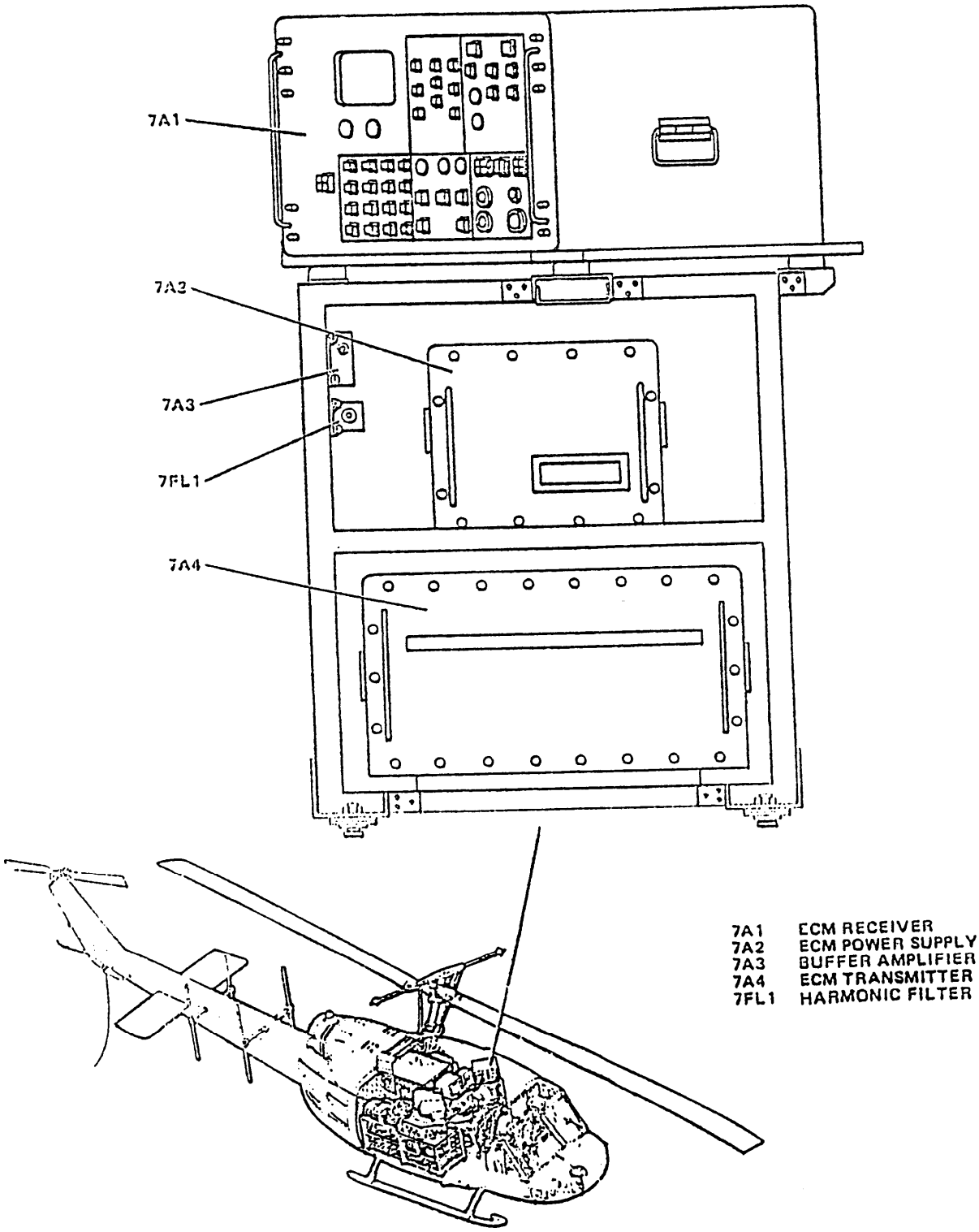

Figure 16-51 ECM Rack Equipment Locations, Unit 7

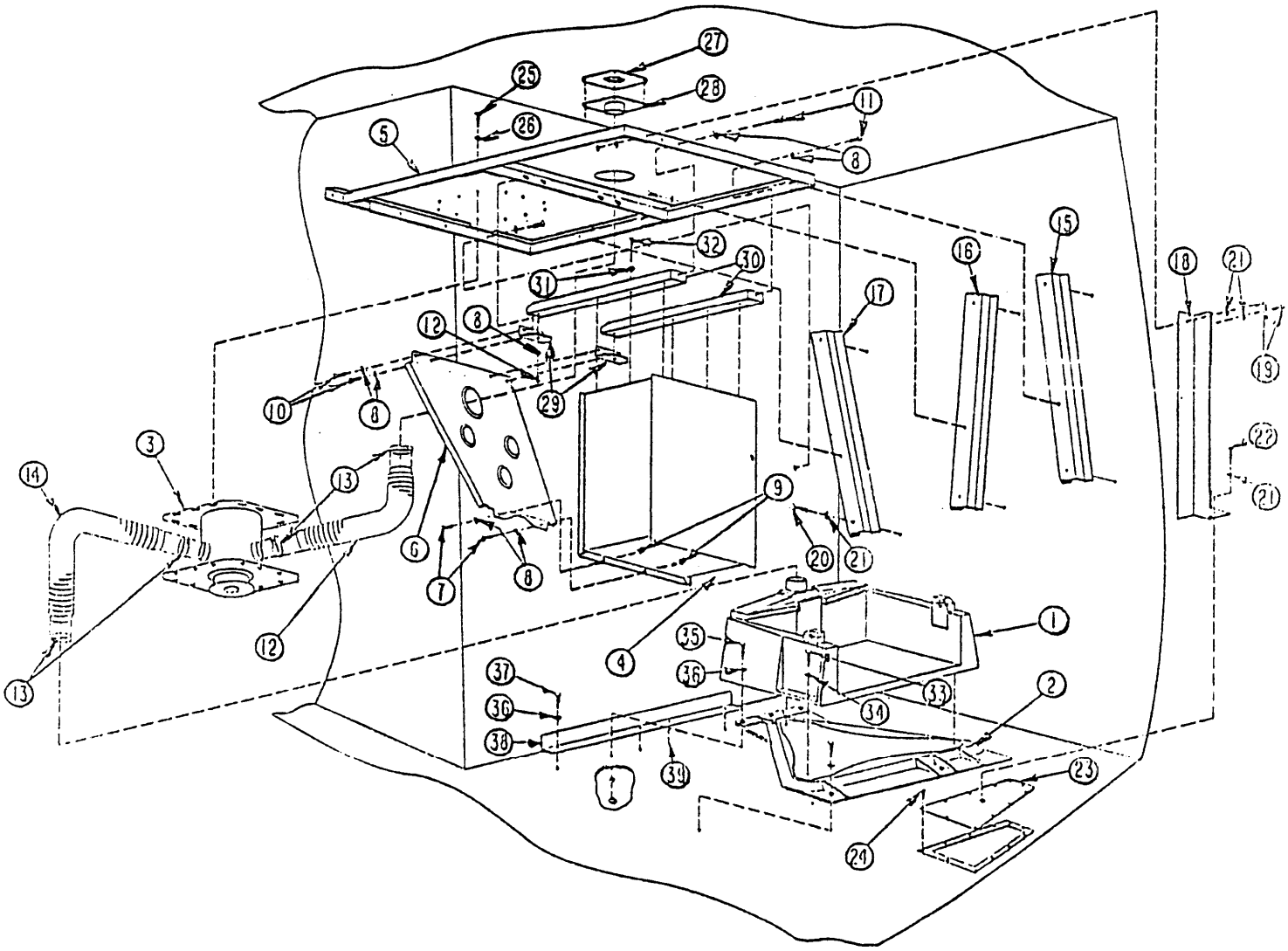

Figure 16-52 Navigation System; AN/ASN-86 (Sheet 1 of 5)

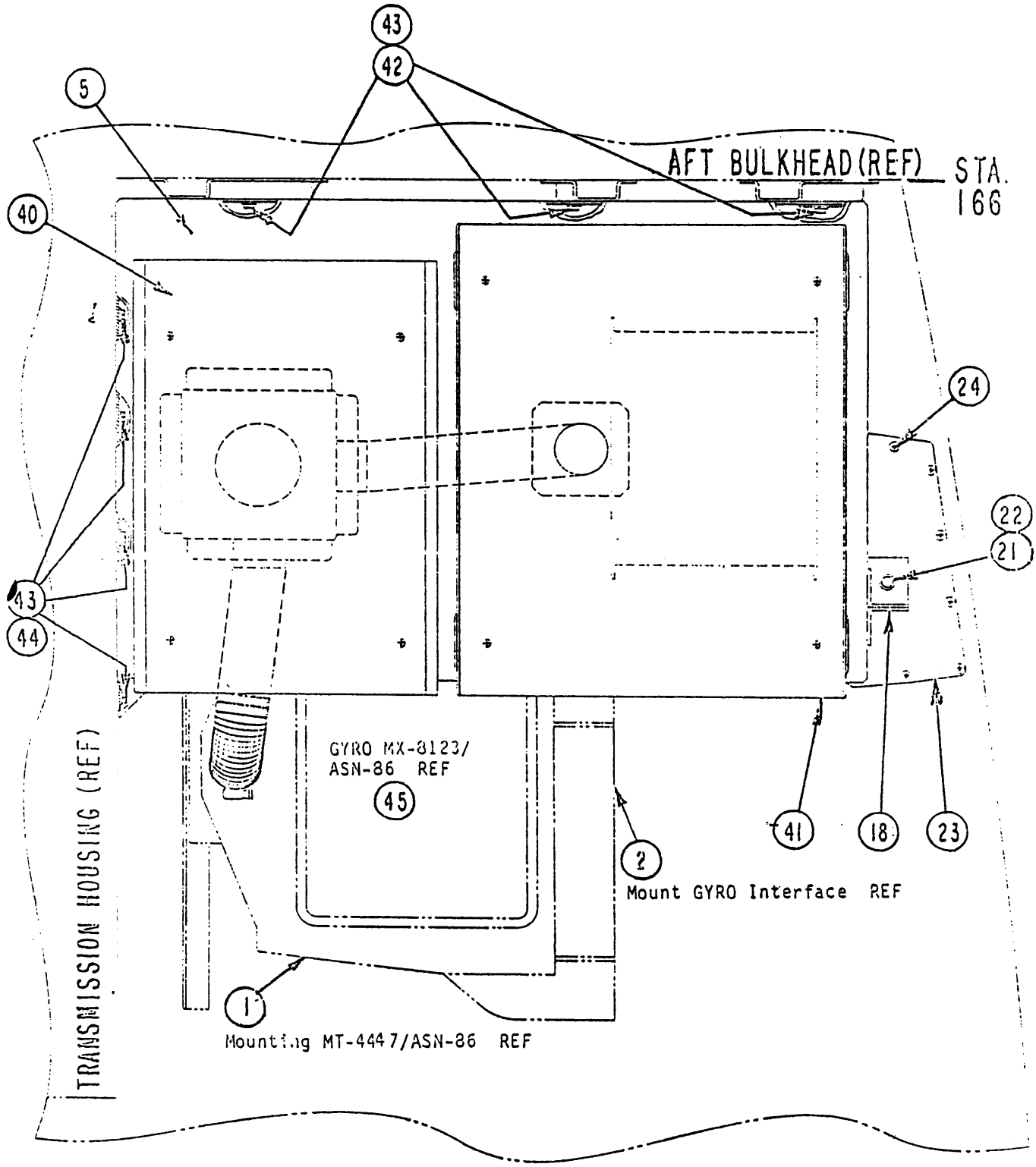

Figure 16-52 Navigation System AN/ASN-86; Removal and Replacement Aircraft Attach Points (Sheet 2 of 5)

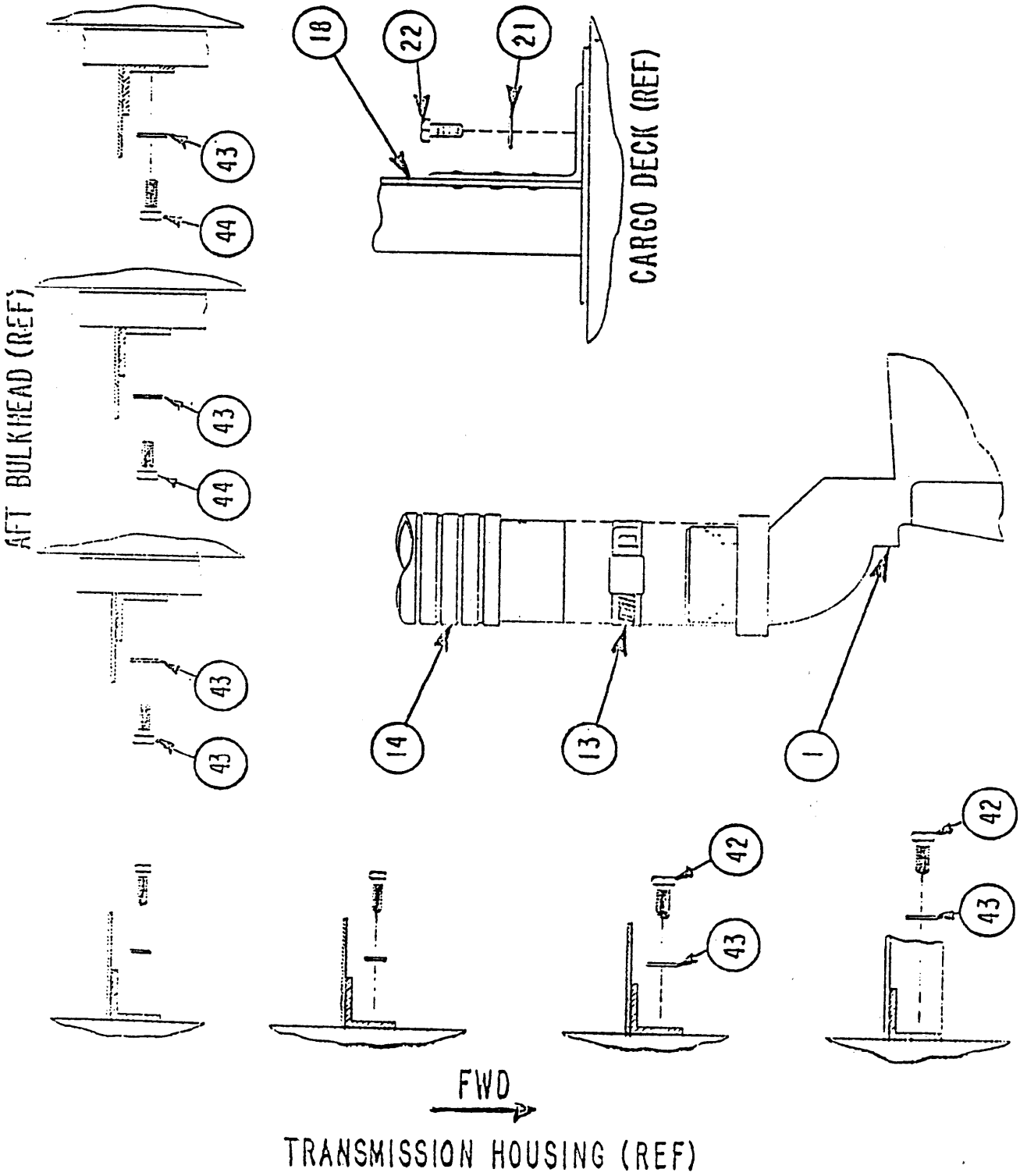

Figure 16-52 Navigation System AN/ASN-86; Removal and Repalcement aircraft Attach Points (Sheet 3 of 5)

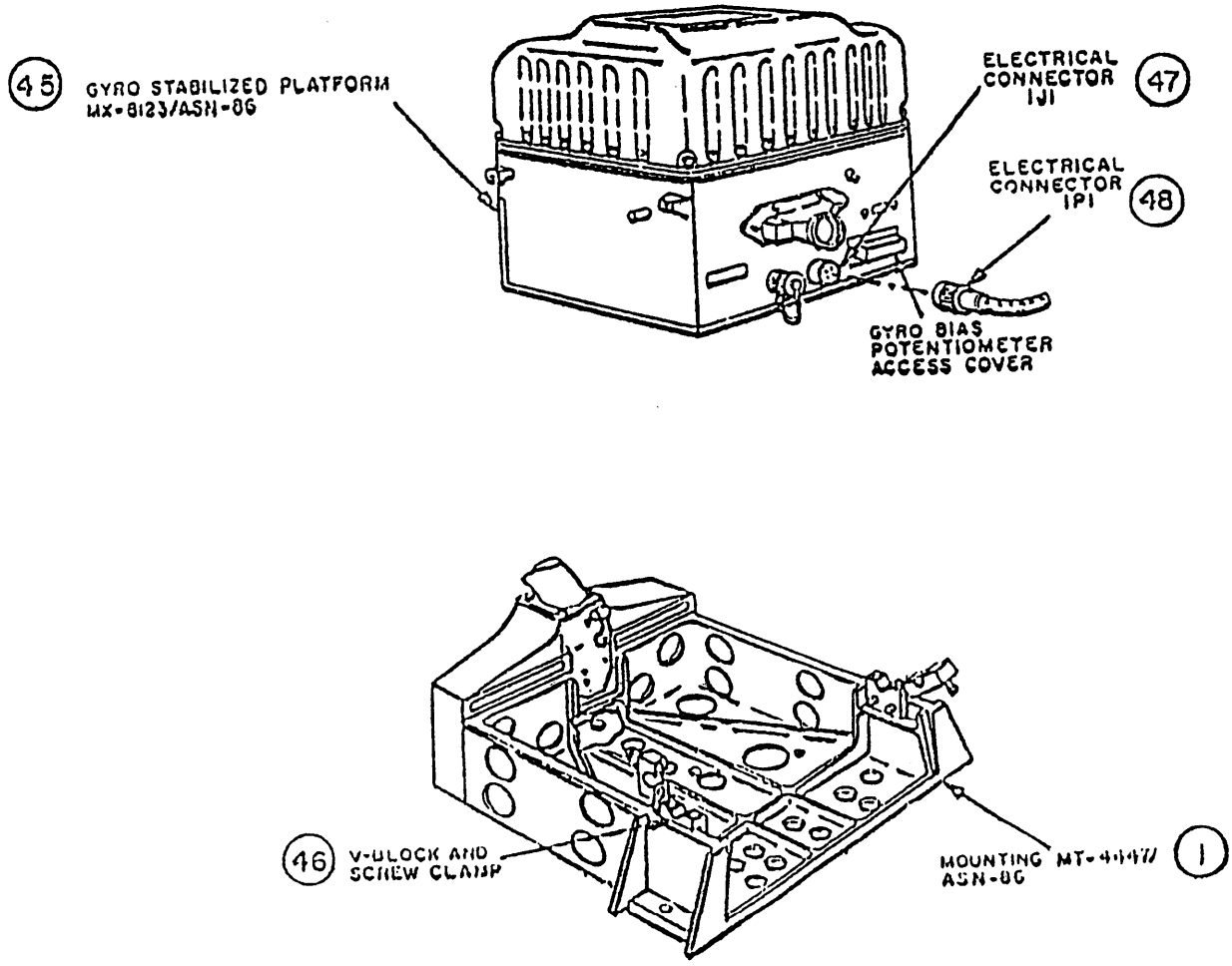

Figure 16-52 Navigation System; AN/ASN-86
Gyro Stabilized Platform and Mounting
(Sheet 4 of 5)

1. GYRO PLATFORM MOUNT
2. GYRO MOUNT INTERFACE
3. PLENUM ASSY
4. JUNCTION BOX
5. SUPPORT, SHELF
6. BRACKET, STIFFENER
7. SCREW
8. WASHER, PLAIN
9. NUT, LOCKING
10. SCREW
11. SCREW
12. HOSE, COOLING
13. CLAMP
14. HOSE, COOLING
15. BASE, MOUNTING
16. BASE, MOUNTING
17. .BASE, MOUNTING
18. SUPPORT
19. BOLT
20. BOLT
21. WASHER
22. BOLT
23. PLATE, STRUCTURAL
24. SCREW
25. SCREW
26. WASHER
27. PLATE, SCREEN
28. PLATE, DUCT
29. ANGLE, SUPPORT
30. CHANNEL, SUPPORT
31. WASHER
32. SCREW
33. BOLT
34. WASHER
35. BOLT
36. WASHER
37. BOLT
38. ANGLE
39. SCREW-
40. COMPUTER, NAVIGATIONAL
41. TACAN, AN/ARN-103
42. BOLT
43. WASHER
44. BOLT
45. GYRO MX-8123/ASN-86
46. V-BLOCK & SCREW CLAMP
47. ELECTRICAL CONNECTOR 1J1
48. ELECTRICAL CONNECTOR 1P1

Figure 16-52 Navigation System; AN/ASN-86 (Sheet 5 of 5)

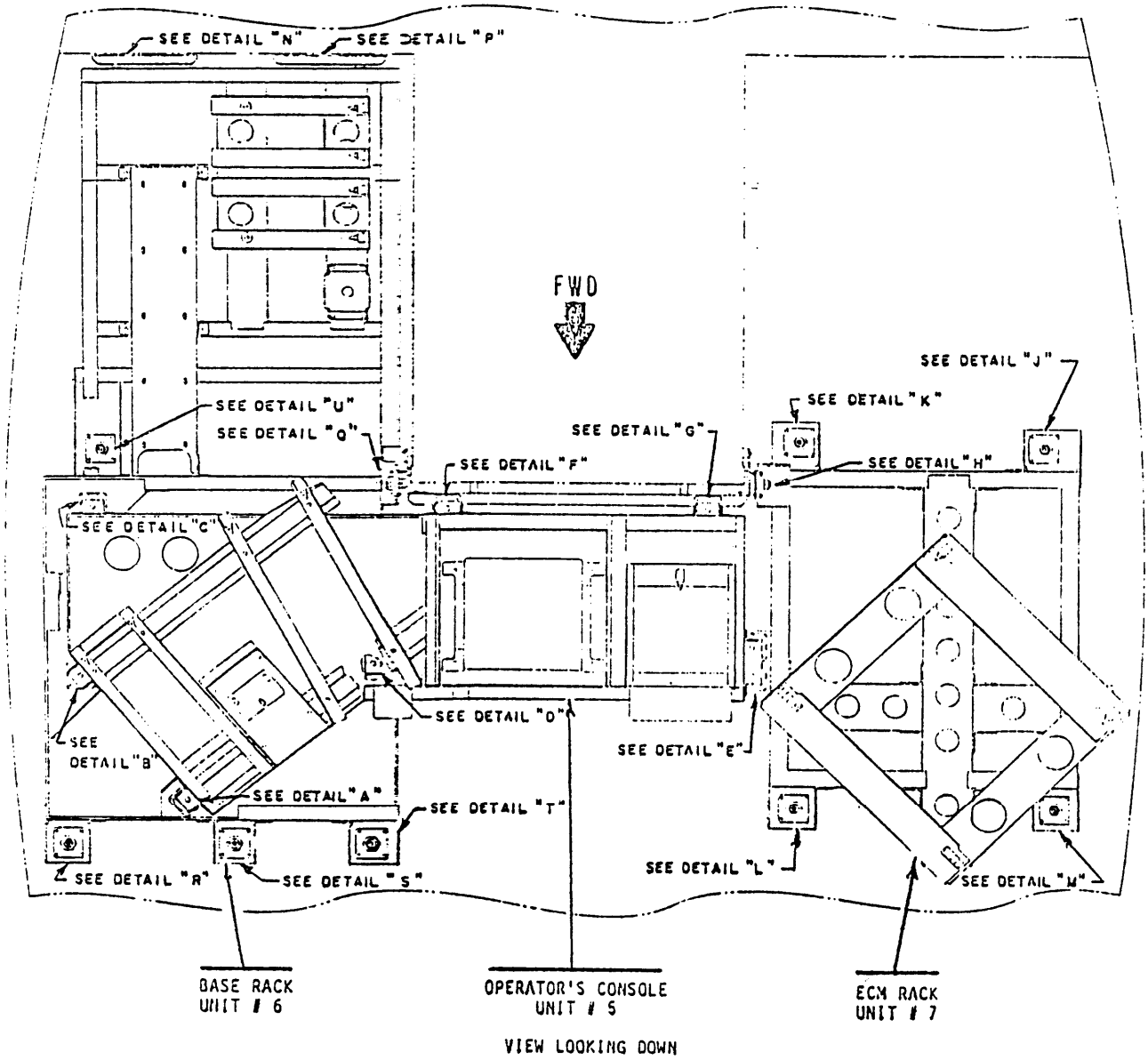

Figure 16-53. Mission Racks/Console, Attachment Points to Airframe (Sheet 1 of 6)

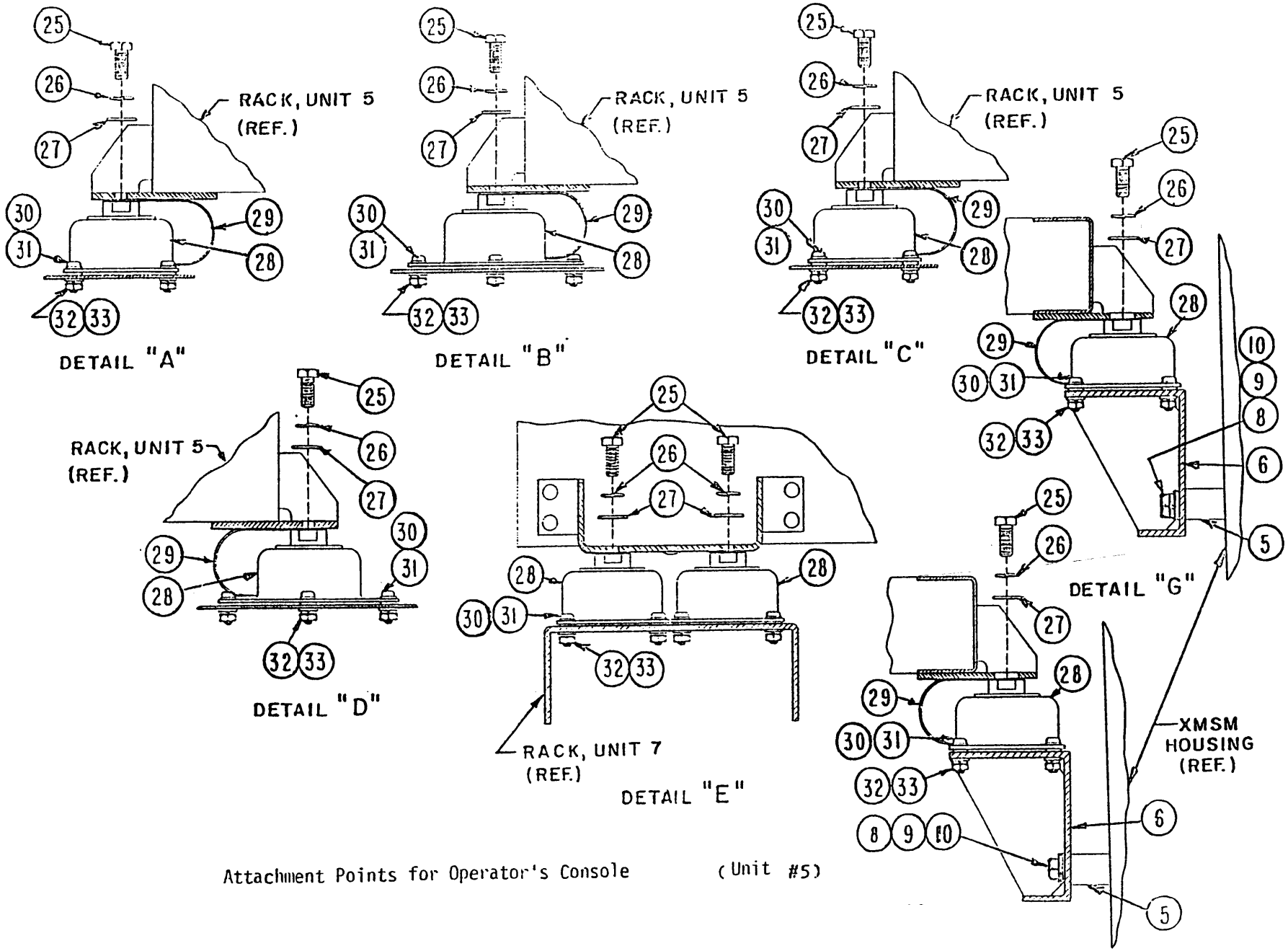

Attachment Points for Operator's Console (Unit #5)

Figure 16-53. Mission Racks/Console Attachment Points to Airframe (Sheet 2 of 6)

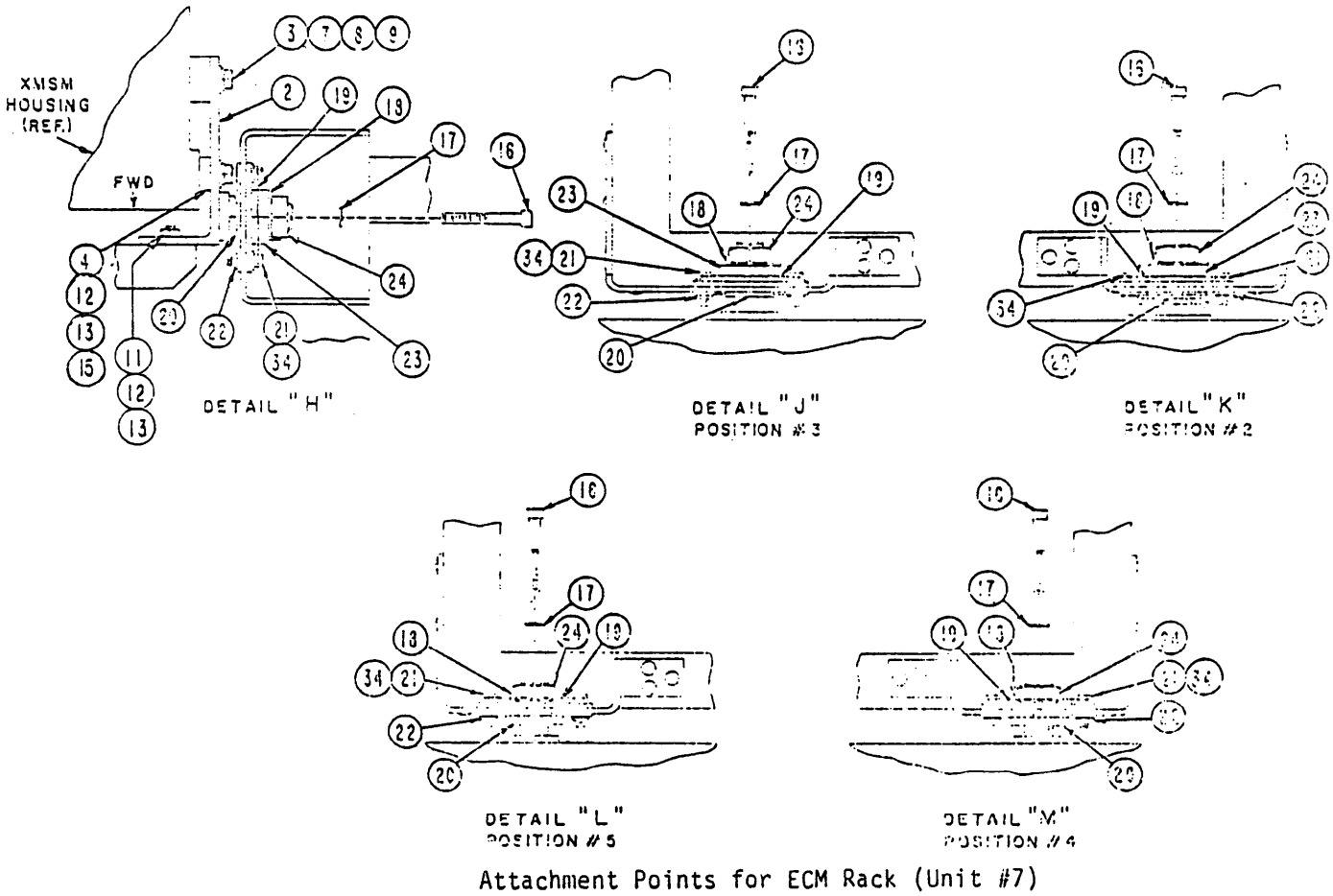

Attachment Points for ECM Rack (Unit #7)

Figure 16-53. Mission Racks/Console Attachment Points to Airframe (Sheet 3 of 6)

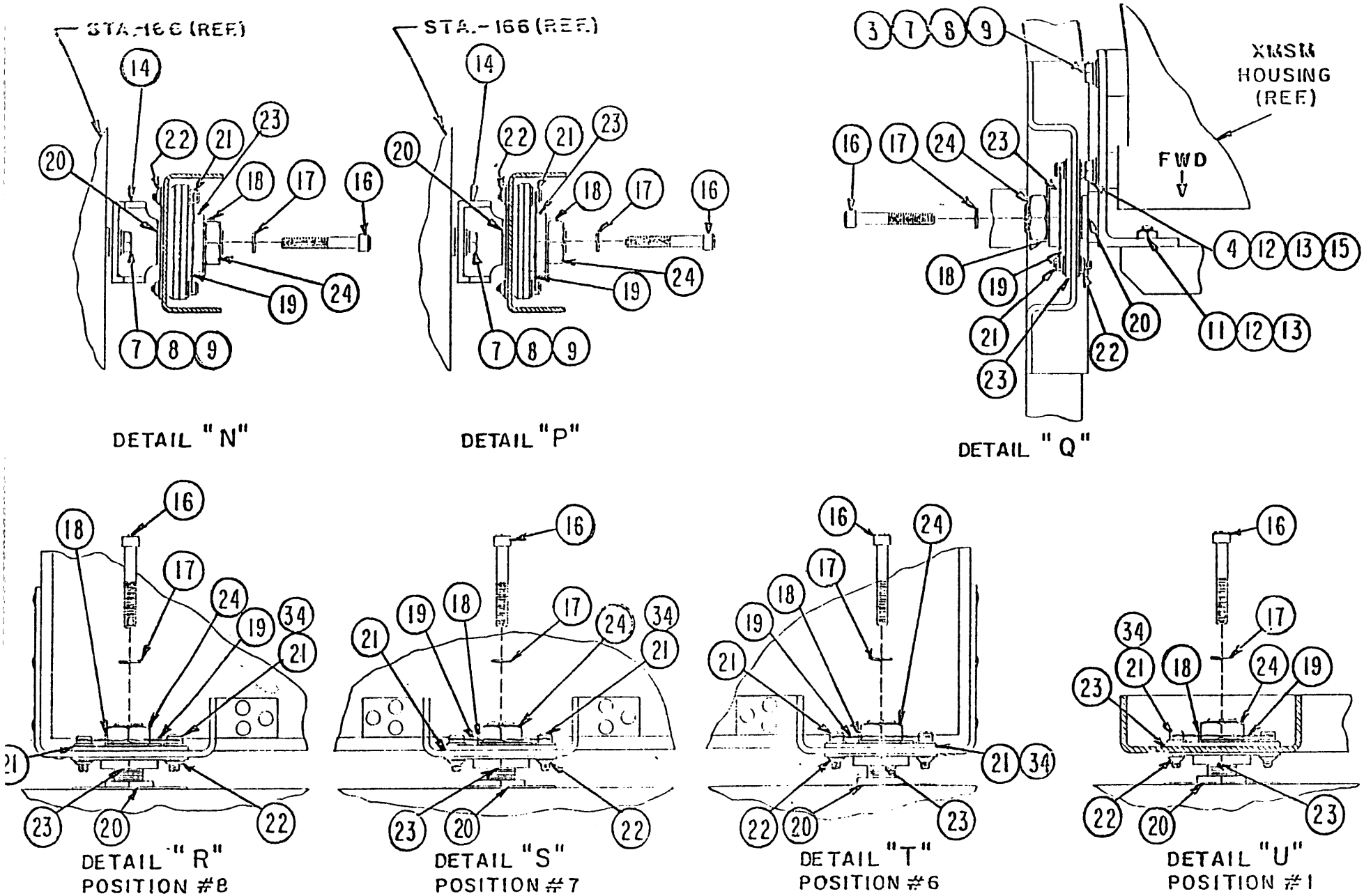

Attachment Points for Base Rack (Unit #6)

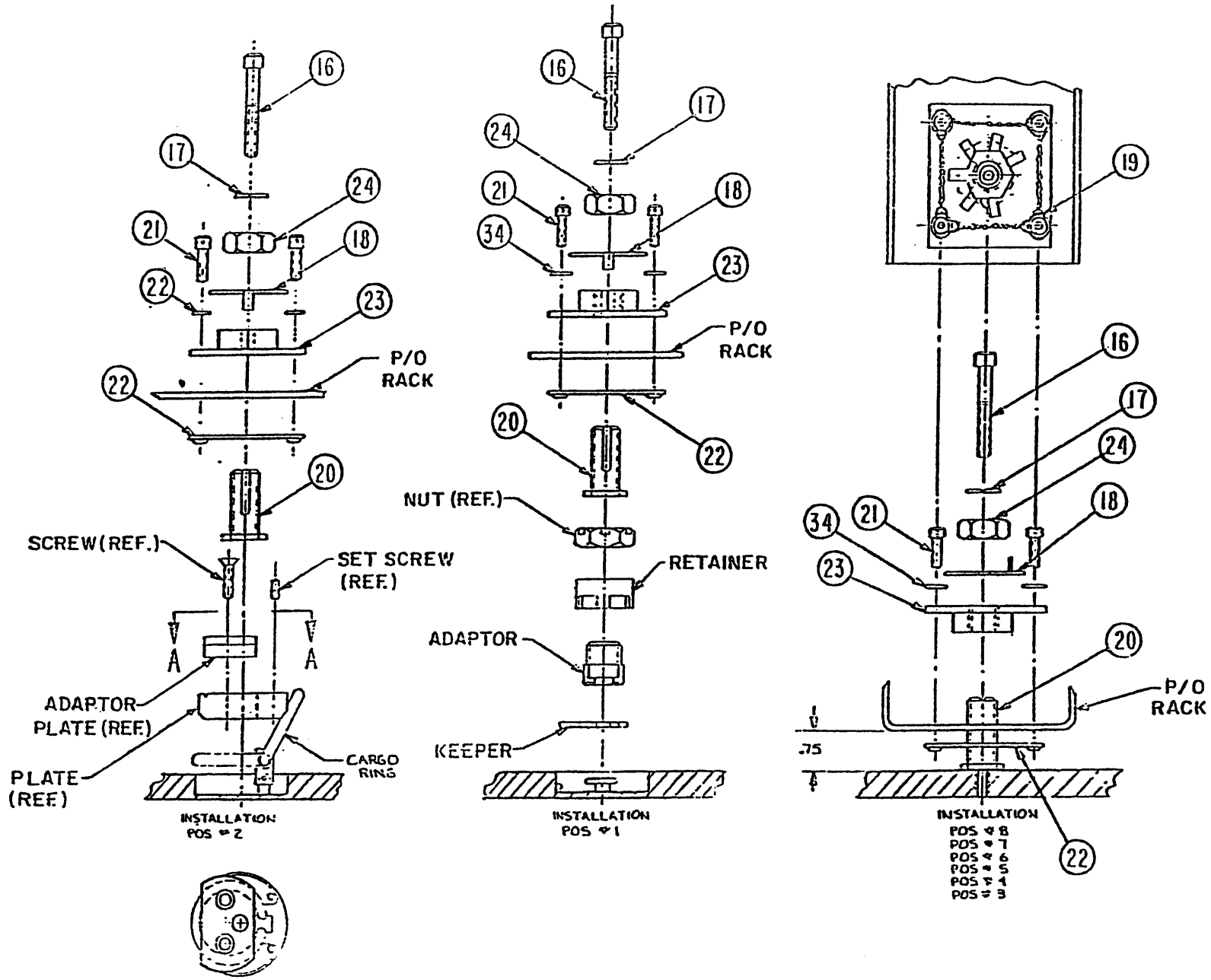

Figure 16-53. Mission Racks/Console Attachment Points to Airframe (Sheet 5 of 6)

1. VERTICAL SUPPORT-LH
2. VERTICAL SUPPORT-RH
3. SPACER
4. SPACER
5. SPACER
6. HORIZONTAL SUPPORT
7. SCREW, CAP
8. WASHER, LOCK
9. WASHER, PLAIN
10. SCREW, CAP
11. SCREW, CAP
12. WASHER, PLAIN
13. WASHER, LOCK
14. BRACKET
15. SCREW, CAP
16. SCREW, CAP
17. WASHER, LOCK
18. WASHER, TAB
19. SAFETY WIRE
20. FOOT LEVELING
21. SCREW, CAP
22. NUT PLATE
23. BRACKET
24. NUT, PLAIN
25. SCREW, CAP
26. WASHER, LOCK
27. WASHER, PLAIN
28. ISOLATOR, VIBRATION
29. STRAP, GROUND
30. SCREW
31. WASHER, PLAIN
32. NUT
33. WASHER
34. WASHER

Figure 16-53, Mission Racks/Console, Attachment Points to Airframe (Sheet 6 of 6)

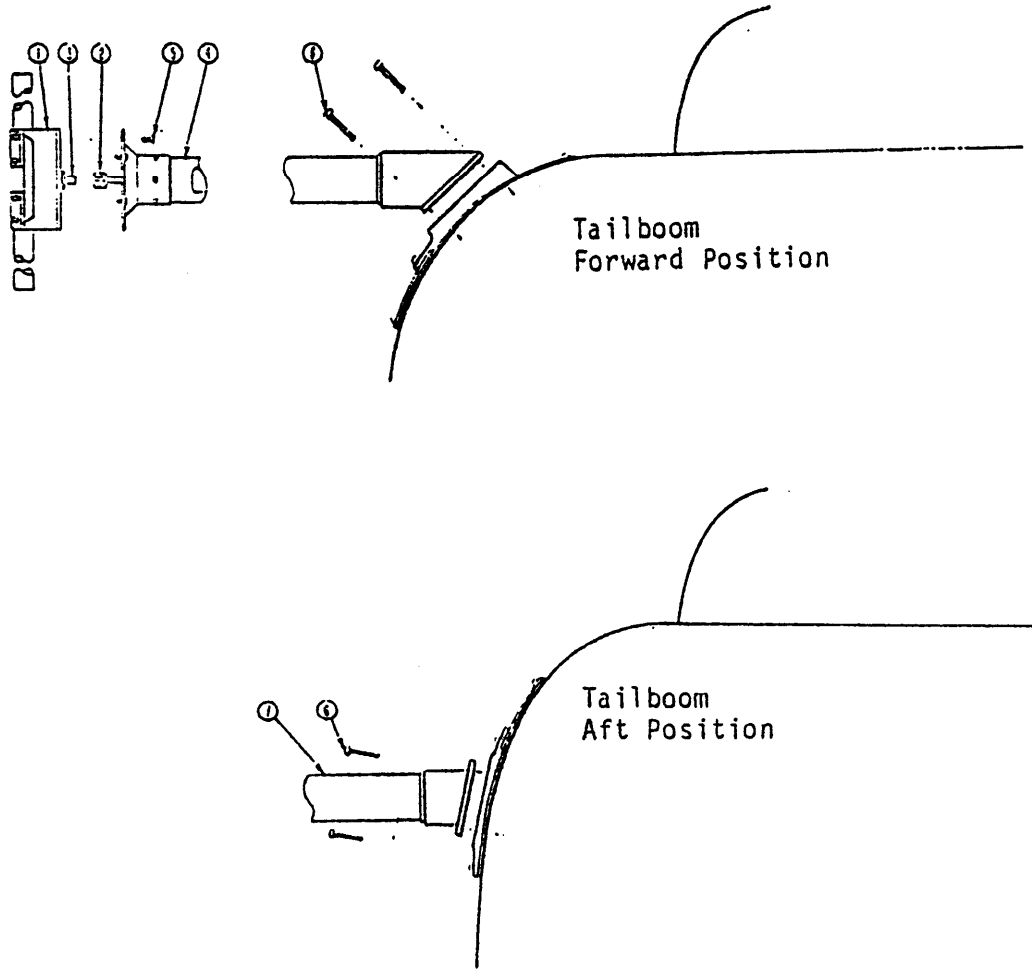

1. DF Antenna Assembly
2. RF Cable
3. RF Connector
4. Boom, Support, FWD
5. Screw
6. Bolt
7. Boom, Support, AFT

Figure 16-54 DF Antenna Installation

CHAPTER 17
EMERGENCY EQUIPMENT

17-1. FIRST AID KITS.

17-2. Description — First Aid Kits. Four general purpose type first aid kits have been provided in the cabin area. Two kits are secured to the right center door post. The other two kits are secured to the left door post. The first aid kits have been designed so they can be easily removed for immediate use.

17-3. Inspection — First Aid Kits.

a. Inspect first aid kit for broken or missing seal, and a legible, serviceable material condition tag. Refer to TM 1-1500-204-23-1.

b. Inspect first aid kits on door posts for loose or missing fasteners.

17-4. Removal — First Aid Kits. Pull outward on kit to release from snap fasteners.

17-5. Repair — First Aid Kits.

a. If seal is broken or missing or material condition tag is missing, refer to TM 1-1500-204-23-1.

b. Tighten or replace loose or missing fasteners on door post.

17-6. Installation — First Aid Kit. Position kit over snap fasteners and push to engage fasteners.

17-7. FIRE EXTINGUISHER AND BRACKET.

17-8. Description — Fire Extinguisher and Bracket. The fire extinguisher is a portable hand operated type. The fire extinguisher is located on the floor to the right of the pilot's seat. For aircraft without armored seats installed, the fire extinguisher may be installed between seats aft of the console. Refer to TM 11-5895-776-14-1. An additional fire extinguisher is mounted on the left jump door panel.

17-9. Removal — Fire Extinguisher and Bracket.

a. Loosen retaining clamp from around upper section of the extinguisher by pulling the hinged lever. Tension on the extinguisher will be released so that the catch on the hinged lever will be disengaged from the attaching ring.

b. Grasp the fire extinguisher by the handle and remove from the hanger bracket.

c. Remove bolts and washers attaching hanger bracket to aircraft and remove hanger bracket.

17-10. Inspection — Fire Extinguisher and Bracket.

a. Refer to TM 1-1500-204-23-1 for inspection of fire extinguisher.

b. Inspect hanger bracket for damaged retaining clamp and loose or missing hardware.

17-11. Deleted.

17-12. Installation — Fire Extinguisher and Bracket.

a. Position hanger bracket and install attaching bolts and washers.

b. Position fire extinguisher in hanger bracket with extinguisher handle opposite bracket.

c. Hook the latch of the retaining clamp handle through ring on inboard section of the retaining clamp. Force free end of clamp handle to the right. This will close the clamp and secure the fire extinguisher in the hanger bracket.

ALPHABETICAL INDEX

Paragraph

A

AC Transformer 9-113
AC Voltmeter 8-298
Acceptance/Rejection Criteria—Transmission Assembly—Inspection 6-28
Access & Inspection Provisions F2-18
Access Covers & Doors 2-24
Actuator Lever 14-90
Actuator, Linear 4-118
Adapter and Cap Assembly 10-77
Adapter and Plate F14-20
Adjustable Window-Crew Door 2-154
Adjuster Assembly 11-115
Adjustment Procedures (Crashworthy)-circuit Arrangement-Adapter Cable F8-7
Aft Center Fuel Cell CoverPlate 10-72
Aft Landing Gear Attachment Point F2-24.1, F-24.4
Air Blower—Combustion Heater 13-57
Air Blower—Exhaust Heater 13-95
Aircraft All Weather Covers F1-11
Aircraft Covers 1-45
Description 1-46
Aircraft Inventory Master Guide Appendic C C-1
Aircraft Jacking and Leveling F1-9
Aircraft Towing F1-8
Air Filter Switch—Engine F9-4
Air Induction System 4-12
Air Induction System, Non-Self-Purging Particle Separator-Description 4-29
Air Induction System Louver and Filter type 4-14
Air Induction System—Non-Self-Purging Particle Separator 4-28
Air Inlet Filters 4-23
Cleaning 4-25
Air Inlet Filters—Inspection 4-17
Air Inlet Screens—Non-Self-Purging Particle Separator 4-30
Air Intake Bellmouth, Screen and Baffles—Installation 4-22
Air Intake, Engine 4-20
Air Particle Separator-Self-Purging 4-52
Air Particle Separator-Self-Purging-Air Induction System 4-43
Air Particle Separator-Self-Purging-Inlet Foreign Object Darnage (FOD) Screen 4-46
Air Particle Separator-Self-Purging-Air Induction System—Description 4-44
Airspeed Indicator 8-172
Alignment-Main Driveshaft P/N 205-040-004 6-24
Allocation Chart-Maintenance B-1
Allocation Chart-Use of the Maintenance... B-2
Alternating Current Power Distribution System 9-98
Altimeter—Barometric—Trouble shooting T8-10
AN/APR-39 (When Installed)--Radar Warning Indicating System 8-314
Anticollision Light 9-211
Anticollision Light System 9-207
Appendix A—References A-1
Appendix C—Aircraft Inventory Master Guide C-1
Appendix D-Illustrated Field Manufacture Item List D-1
Appendix E Intermediate Storage E-12
Appendix E—Storage, Short Term E-3
Appendix E Storage of Aircraft
Appendix E Flyable Storage E-2
Armament Control—-Panel Assembly 16-89
Armament Couplings 7-108
Armament Junction Box 16-101
Armament Subsystem 7.62MM Machine Gun M23 16-27
Armament Subsystem M23 Machine Gun M60D in Stowed Position, AS F16-12
Armament Subsystem—M59 16-32
Armament Subsystem M59 Main Components F16-23
Armored Crew Seat 2-247
Armored Crew Seat Headguard F2-48
Attitude Indicating System 8-190
Attitude Indicator—Troubleshooting..... T8-11
Attitude Indicators 8-192
Auxiliary Exhaust Heater 13-84
Auxiliary Exhaust Heater—Heat Exchanger. 13-87
Auxiliary Exhaust Heater System Schematic F13-10
Auxiliary Fuel Cell Fill Cap-Crashworthy.. 10-171
Auxiliary Fuel Cell Fuel Gage-Crashworthy 10-167
Auxiliary Fuel Cell Fuel Pump 10-157
Auxiliary Fuel Cell Pump Assembly—Crashworthy 10-183
Auxiliary Fuel Cell Refuel Receiver—Crashworthy 10-179
Auxiliary Fuel Cell Shutoff Valve-Crashworthy 10-181
Auxiliary Fuel Provisions 10-156
Auxiliary Fuel System—Servicing 1-4
Auxiliary Fuel System—300 Gallon Crashworthy 10-161

ALPHABETICAL INDEX

Paragraph

B

Baffle Assembly—Induction 2-72
Barometric Altimeter 8-181
Battery 9-30
Battery Feeder Relay 9-41
Battery Relay 9-39
Battery System 9-26
Battery System—Troubleshooting T9-1
Beam - Lift 2-58
Beam-Lift-Repair F2-22
Bearings 11-185
Bellcranks, Levers and Supports-Collective Control System 11-47
Bellcranks, Levers and Supports-Cyclic Control System 11-101
Bellcranks, Levers and Supports-Elevator Control System 11-179
Bellcranks, Levers, and Supports-Tail Rotor Control System 11-164
Blackout Curtains 2-186
Blade, Main Rotor 5-27
Blades, Tail Rotor 5-114
Blanket Receptacles—Heated 9-276
Bleed Air and Defroster 13-1
Bleed Air Heating System 9-270
Bleed Check Valve-Governor 10-46
Blood Bottle Hooks 16-105
Boost Pumps—Fuel 10-94
Brake-Cyclic Controls, Magnetic 11-73
Breakaway Valves 10-155
Breaker Valve—Siphon 10-66
Build-up-Universal Transmission Assembly F6-15
Bulb-Engine Oil Temperature 8-90
Bus Control Relay 9-83
Bus Relay—Nonessential 9-87

C

Cabin Floor Panels 2-28
Cabin Roof Windows 2-161
Cabin Thermostat 13-47
Center Service Deck Panel Repair F2-12
Check Valve 10-140
Check Valve-Governor Bleed 10-46
Check Valves 7-26
Chip Detector/Oil Contamination 4-101
Circuit Breaker-AC 9-91
Circuit Breaker-DC 9-12

Paragraph

Classification of Damage-Honeycomb Panels T2-5
Classification of Damage-Sheet Metal Skins Forward Fuselage T2-6
Cleaning 1-14
Cleaning & Treating Corroded Parts T2-4
Cleaning-Power Plant Assembly 4-4
Clock 8-231
Clock—Troubleshooting T8-15
Closed Circuit Refueling Receiver 10-83
Closed Circuit Refueling Receiver 10-88
Cockpit Lights 9-142
Cockpit Lights-Troubleshooting T9-8
Collective Control System 11-4
Collective Jackshaft 11-7
Collective Levers 5-68
Collective Stick, Copilots 11-34
Collective Stick, Pilots 11-25
Compass-Standby 8-225
Compass—Standby-Troubleshmting T8-14
Connector Replacement Chart F-9
Console—Pedestal Lights—Instrument 9-160
Consumable Maintenance Supplies and Materials 1-22
Consumable Maintenance Supplies and Materials T1-1
Control Assembly-Collective Jackshaft 11-17
Control Panel, Mine Dispenser 16-38
Control Panel-M6 Subsystem 7.62MM M60C Machine Gun 16-64
Control Panels 9-19
Control Quadrant 11-137
Control Relay—Bus 9-83
Control Tube and Quill—Tail Rotor 11-143
Control Stick, Cyclic 11-56
Control System Circuitry-Governor 9-252
Control System Circuitry-Hydraulic 9-226
Control System, Collective 11-4
Control System, Elevator 11-170
Control System, Flight 11-1
Control Tubes—Collective Control System.. 11-41
Control Tubes-Cyclic Control System 11-41
Control Tubes—Elevator Control System 11-173
Control Tubes-Tail Rotor Control System.. 11-158
Controls & Accessories-Engine 9-242
Controls, Tail Rotor Crosshead 5-107
Conversions—Decimal Equivalent F1-5
Converter Assembly F12-7
Troubleshooting T12-3
Converter & Motor Assy—L/R Configuration F12-7

ALPHABETICAL INDEX (Continued)

Paragraph

Cooler Assembly - Oil 6-217
Copilot Collective Stick 11-34
Corrosion -- Aluminum and Magnesium Alloy, Treatment 1-20
Corrosion Damage Classification - General T-3
Coupling -- Quick Disconnect-Inspection F6-23
Removal 6-151
Couplings, Armament 7-108
Couplings - Inner-Spherical on Main Driveshaft - Inspection Criteria F6-3
Course Indicator (ID-1347(YARN) 8-221
Covers - Aircraft 1-45
Cowling - Engine 2-44
Cowling - Transmission 2-37
Cowling - Transmission & Engine F2-20
Cowlings & Fairing 2-35
Description 2-36
Crew Door Jettison (Ejection) Mechanism 2-98
Crew Door Jettison Mechanism P2-31
Crew Doors 2-84
Crew Doors - Latching Mechanism 2-92
Crew Seat - Armored 2-247,F2-47
Crow Seat Belts 2-241
Crew Seat Coven F2-45,2-225
Crew Seat -- Standard 2-216
Critical Areas ..... Repair Limits - Windshield & Windows F2-41
Cross Fitting 10-101
Crosshead Controls, Tail Rotor S-107
Crossover Assemblies 10-59
Curtains -- Blackout 2-186
Cyclic Control Stick 11-56
Cyclic Control System 11-53

D

Damage Classification -- General - Corrosion 2-3
Damage Classification - Honeycomb Panels ..... ’.n-
Damage Limits - Intermediate Gearbox Support nstalltion P2-62.1
Damage Limits - Repair - Lift ..... Beam F2-21
Dampers and Adapters 548
Dampers - Friction 6-149
DC Bus System - General 9-56
DC Bus System - General Troubleshooting (Helicopter Prior to S/N 66-746) T9-3

Paragraph

DC Bus System - Generator - Troubleshooting (Helicopters S66-746 and Subsequent T9-4
DC Circuit Breakers 9-12
DC Generator - Main 9-60
DC Voltmeter 8-300
Decimal Equivalent Conversions F1-5
Defroster Installation - Bleed Air 13-1
Defroster Installation - Combustion Heater and 13-14
De-ice Circuitry - Engine 9-244
Dimensions - Helicopter FI-7
Direct Current Power Distribution System 9-1
Dome Lights 9-151
Doors -- Access Covers 2-24
Cargo 2-114
Crew F2-28
Nose 2-77
Drain Valve - Cell 10-26
Drive Quill - Tail Rotor 6-125
Driveshaft Assembly - Main - Limits Chart P/N 205-040-004 ..... F6-10
Driveshaft Hangers 6-167
Aft Tailboom Installation F6-50
Coupling Teeth Wear Patterns F6-46
Forward Tailboom Installation F6-49
Fuselage Installation F648
Hanger F6-45
Driveshaft - Main P/N SKCP228-1 ..... 6-24.1
Drivesbaft - Main PIN 204-040-004 6-13
Driveshaft Main - Alignment P/N 205-040-004 6-24
Driveshaft - Main-Assembly and Installation P/N 205-040-004 ..... F6-9
Driveshaft - Main Disassembly P/N 205-040-004 6-18
Driveshaft - Main - Cleaning P/N 205-040-004 6-19
Driveshaft - Main - Inspection P/N 205-040-004 6-20
Drivesbaft - Main - Inspection of Installed P/N 205-040-004 6-15
Driveshaft Main -- Installation P/N 205-040-004 6-23
Driveshaft Main P/N 205-040-004-Lubrication and Assembly 6-22
Driveshaft - Main - Removal P/N 205-040-004 6-17
Driveshaft Main P/N 205-040-004 6-21
Driveshaft - Main - Troubleshooting P/N 205-040-004 ..... T6-2,6-16

ALPHABETICAL INDEX (Continued)

Paragraph

Driveshaft - Tail Rotor 6-159
Droop Compensator Controls.....4-126
Dual Tachometer.....8-14
Dual Tachometer - Troubleshooting.....T8-1
Ducts, Nozzles, Registers, Gaskets and
Miscellaneous Valves.....13-4

E

EGT Indicator Scale & Friction Error Tolerances
Plus or Minus Degrees Celsius T8-6
Electrical - Component Location F9-1
Electrical Components (AC) - Common 9-91
Description.....9-92
Electrical Components (DC) - Common 9-3
Electrical Components - Miscellaneous 9-5
Electrical Equipment Location F9-2
Elevator Assembly.....2-286
Elevator, Bearing Limits.....F2-55
Elevator Control Assy - Removal and
Installation F2-54
Elevator Control System.....11-170
Elevator Support & Horn Assy - Wear &
Damage Limits F2-56
Emergency Jettison Release Mechanism 16-8
Engine Assembly.....4-6
Engine Controls & Accessories 9-242
Engine Cowling.....2-44
Engine Cowling -
.....Transm
ission F2-20
Engine De-Ice Circuitry.....9-244
Engine De-Ice Circuitry - Troubleshooting.....T9-15
Engine Instruments 8-10
Engine Mounts.....F2-
50,2-267
Engine Oil Pressure Indicator.....8-60
Engine Oil Pressure Transmitter 849
Engine Oil System - Servicing.....1-5
Engine Oil Tank.....4-84
Engine Oil Temperature Bulb 8-90
Engine Oil Temperature Indicator 8-80
Engine Quick Change Assembly.....4-133
Engine Vibration Meter Receptacle.....9-120
Equipment Lists.....F-7
Equipment Location - Electrical.....F9-2
Exhaust Gas Temperature Indicating, System.....8-99
Exhaust Gas Temperature Indicator 8-101
Exhaust Heater - Air Blower 13-95
Exhaust Heater - Auxiliary.....13-84
Exhaust System.....4-58
Exhaust System - Clamp.....4-60
Exhaust System - Tailpipe.....4-67
Exterior - Cleaning.....1-17

Paragraph

Exterior - Lights System..... 9-194
External Oil Filter.....F6-57,6-204
External Power - Application..... 1-53
External Power Receptacle..... 9-47
External Power Relay..... 9-54
External Power System..... 9-43
External Power System - Troubleshooting..... T9-2
External Stores Support..... 16-1
External Stores Support Assembly F16-1
Extinguisher and Bracket, Fire..... 17-7

F

Fairing - Tailpipe 2-51
Feeder Relay - Battery..... 9-41
Field Relay - Generator..... 9-79
Fifth Mount Support - Pylon 2-62
Fire Detection System - Engine 12-1
Fire Extinguisher Bracket..... 17-7
Firewall and Tailpipe Assembly
Installation..... 4-143
Firewalls & Heat Shield..... 2-66
First Aid Kits..... 17-1
Fittings & Screens, Lines, Manifolds..... 6-81
Fittings - Support Tail Rotor Driveshaft..... 6-174
Flasher - Navigation Lights 9-229
Flight Control System..... 11-1
Flight Control System (Electrical)..... 9-260
Description 8-162
Flight Safety Critical Aircraft Parts Program 1-67
Floor Panels - Cabin 2-28
Fluid Connectors - Torque Values TI-5
Flyable Storage Appendix E..... E-4
Force Gradient Cyclic Controls 11-40
Force Gradient - Tail Rotor Controls..... 11-113
Force Trim System Circuitry 9-262
Forward Door Window - Crew Door..... 2-147
Forward Towing 1-35
Free Air Temperature Gage..... 8-305
Friction Dampers..... 6-149
Friction Damper Mount F2-23.3
Friction Damper Retaining Clip F2-23.1
Fuel Boost Pump Cross Fitting 10-107
Fuel Boost Pumps..... 10-100
Fuel Boost Pump, Cartridge..... 10-10.1i
Fuel Cap and Adapter Assembly 10-78
Fuel Cell Coverplate - Aft Center 10-72
Fuel Cells - Crashworthy..... 10-1
Fuel Cell Drain Valve 10-27
Fuel Cell Sump Assembly..... 10-135
Fuel Check Valve 10-150

ALPHABETICAL INDEX

Paragraph

Fuel Crossover Assemblies 10-60
Fuel Ejector Pump 10-116
Fuel Filter Assembly 10-20
Fuel Flapper Valve 10-122
Fuel Flapper Valve Plates..... 10-128
Fuel Flow Switch..... 10-145
Fuel Governor Bleed Check Valve 10-47
Fuel Manifold Assembly 10-54
Fuel Motor Driven Shutoff Valve 10-40
Fuel Pressure Differential Transmitter 4-147
Fuel Pressure Transmitter..... 10-33
Fuel Quantity Transmitters..... 10-112
Fuel Siphon Breaker Valve 10-66
Fuel Warning System 20 Minute Float
Switch..... 10-93
Fuel Boost & Fuel Valve Circuity 9-248
Fuel Pressure Indicating System 8-121
Fuel Pressure Indicator..... 8-128
Fuel Quantity Indicating System 8-241
Fuel Quantity Indicator..... 8-248
Fuel Quantity Indicator-Troubleshooting.... T8-16
Fuel Quantity System-Test (T68) 8-249
Fuel Quantity System-Test/Adjust (T68.1) . 8-249.1
Fuel Quantity Transmitter 8-252
Fuel Solenoid Valve-Start 9-136
Fuel Train-Heater 13-36
Fuel Valve & Fuel Boost Circuitry 9-248
Functional Check Low Fuel Caution System 10-19.1
Fuselage 2-1
Fuselage Skin-Forward F2-4
Fuselage Structure 2-3

G

Gages-Gil Level Sight 6-75
Gas Producer Tachometer Generator 8-49
Gas Producer Tachometer Indicator 8-40
Repair or Replacement..... 8-46
Gas Producer N1 Tachometer Generator
Installation..... 4-151
Gas Temperature Indicating System-Exhaust 8-99
Gas Temperature Indicator-Exhaust 8-101
Gaskets and Miscellaneous Valves-Ducts,
Nozzles, Registers..... 13-4
Gearbox-Intermediate (42°)..... F6-51, 6-179
Gearbox-Tail Rotor F6-52, 6-190
Gearboxes-Intermediate (42 Degree) and
Tail Rotor (90 Degree)-Servicing 1-8
Gearboxes-Transmission Assembly—
Identification of Metal Particles F6-14, 6-30

Paragraph

Generator &DC Bus System 9-56
Generator &DC Bus System (Helicopters
Prior to S/N 66-7460)-Troubleshooting . . T9-3
Generator &DC Bus System-Troubleshooting
(Helicopters S/N 66-746 and Subsequent). T9-4
Generator Drive Quill 6-109
Generator Field Relay 9-79
Generator-Main DC..... 9-60
Generator-Power Turbine Tachometer 8-22
Generator-Rotor Tachometer 8-31
Generator Shunt 9-69
Generator-Standby (Starter
Generator)..... F9-2.1, 9-67
Generator-Starter 9-126
Governor Bleed Check Valve 10-46
Governor Control System Circuitry 9-252
Governor Control System Circuitry-Trouble-
shooting..... T9-16
Ground Handling 1-32
Ground Handling Wheel Pump-Servicing.. 1-10
Ground Handling Wheel Tires-Servicing . . . 1-11
Ground Test Connections 7-33
Gun Firing Relay M6 Subsystem 7.62MM
M60C Machine Gun 16-72

H

Hangers-Driveshaft 6-167
Heat Exchanger-Auxiliary Exhaust Heater. 13-87
Heat Shield—Firewalls 2-66
Heat Suppressor F2-51, 2-273
Heated Blanket Receptacles 9-276
Heater Air Pressure Switches 13-52
Hinter Fuel Train 13-36
Heating System Circuitry-Bleed Air 9-270
Heater System Circuitry-Muff 9-273
Helicopter Assembly F2-1
Helicopter Assembly (EH-lH) F2-1.1
Helicopter Dimensions..... F1-7
High Performance Rescue
Hoist..... F14-14.1, 14-145.1
Hinged Panel 2-104
Hinged Panel Assy F2-32
Hoisting 1-47
Hoisting-Component 1-50
Hoist, Rescue 14-1
Hoist System Circuitry-Rescue (Provisions) 9-286
Honeycomb Panels 2-15
Classification of Damage 2-17

ALPHABETICAL INDEX

	Paragraph
Honeycomb Panels-Classification of Damage	T2-5
Honeycomb Panels-Minor Damage Repairs	F2-7
Honeycomb Panels-Repair of Dents, scars & scratches	F2-6
Hook System Circuitry-Cargo	9-283
Hoses, Oil Lines and Fittings	4-77
Hoses, Tubing, Attaching Hardware	7-114
Hub and Blade Assembly, Main Rotor	5-3
Hydraulic Control System Circuitry	9-266
Hydraulic Cylinder and Support, Tail Rotor..	11-63.1
Hydraulic Filter Assembly	7-46
Hydraulic Pump	7-19
Hydraulic Pump & Tachometer Drive Quill..	6-118
Hydraulic Reservoir	7-9
Hydraulic Reservoir-Servicing	1-9
Hydraulic Servo Cylinder Assembly (Collective Control)	7-80
Hydraulic Servo Cylinder Assembly (Cyclic Control)	7-67
Hydraulic System	F7-1, 7-1

I

Icing System Test Box Schematic	F9-3
(ID-1347( )/ARN)-Course Indicator	8-221
(ID-998( )/ASN & ID-250( )/ARN-Radio Magnetic Indicators	8-223
Identification of Metal Particles-Transmission Assembly & Gearboxes	F6-14, 6-30
Idle Stop System Circuitry	9-256
Ignition System	9-130
Ignition Unit	9-134
Ignition Unit and Igniter Plug-Combustion Heater	13-27
Igniter Plug-Combustion Heater Ignition Unit	13-27
Indicating System (AN/APR-39 (When Installed-Radar Warning	8-314
Indicating System-Attitude	8-190
Indicating System-Engine Oil Temperature	8-78
Indicating System-Exhaust Gas Temperature	8-99
Indicating System-Fuel Pressure	8-121
Indicating System-Fuel Quantity	8-241
Indicating System-Torque Pressure	8-141
Indicating System-Transmission Oil Pressure	8-258
Indicating System-Transmission Oil Temperature	8-278
Indicating Systems-Tachometer	8-12
Indicator-Airspeed	8-172
Indicator—Airspeed-Troubleshooting	T8-9
Indicator-Engine Oil Temperature	8-80
Indicator—Exhaust Gas Temperature	8-101
Indicator—Fuel Pressure	8-123
Indicator-Fuel Quantity	8-243
Indicator-Gas Producer Tachometer	8-40
Indicator (ID-1347( )/ARN)-Course	8-221
Indicator Torque Pressure	8-143
Indicator—Transmission Oil Pressure	8-260
Indicator—Transmission Oil	8-280
Indicator-Turn & Slip	8-201
Indicator-Vertical Velocity	8-210
Indicators-Attitude	8-192
Induction Baffle Assembly	2-72
Inertia Reel-shoulder Harness-Crew Standard Seat	2-231
Infrared Suppressor-Duct Assembly Outer Jacket	2-279.1
Inlet Foreign Object Damage (FOD) Screen-Air Particle Separator-Self-Purging	4-46
Inspection	4-49
Installation	4-51
Removal	4-47
Repair	4-50
Inlet Screen-Non-Self-Purging Air Particle Separator	
Cleaning	4-34
Inspection	4-32
Installation	4-36
Removal	4-33
Repair	4-35
Input D-rive Quill P/N 205-040-263	F6-26, 6-101
Input Drive Quill P/N 204-040-363	F6-24, 6-92
Input Drive Quills	6-90
Input Driveshaft P/N 205-040-004-Lubrication and Assembly	F6-11
Inspection-Acceptance/Rejection Criteria-Transmission Assembly	6-28
Inspection-Main Driveshaft P/N 205-040-004	6-20
Inspection of Installed Main Driveshaft P/N 205-040-004	6-15
Inspection of Roller Chain (Chain Removed)	
Inspection-Special	1-58
Inspection-Transmission Assembly	6-33
Inspection-Transmission Oil Filter.,	6-45

*U.S. GOVERNMENT PRINTING OFFICE:1995-655-121/20212

PIN: 040152-008

ALPHABETICAL INDEX

	Paragraph
Installation-Main Driveshaft P/N 205-040-004	6-23
Installation-Transmission Assembly	6-40
Installation-Transmission Oil Filter	6-49
Instrument, Console, & Pedestal Lights	9-160
Instrument Maintenance	8-1
Instrument Panels	8-315
Instrument Premaintenance Requirements	8-8
Instruments-Engine	8-10
Instruments-Flight	8-161
Instruments-Miscellaneous	8-229
Instruments-Navigation	8-219
Intermediate Storage-Appendix E	E-10
Interior-Cleaning	1-16
Interior Lights System	9-140
Intermediate Gearbox (42°)	6-179
Inverter	9-97
Inverter Failure Relay	9-111
Inverter Power Relay—Main	9-105
Inverter Power Relay Spare	9-107
Inverter Relay	9-109
Inverter System	9-93
Inverter System—Troubleshooting	T9-5
Inventory Items List Component Diagram	FC-1
Irreversible Valve	7-100
Isolation of Circuits for Alignment-RPM Limit Warning Detector Models	T9-9

J

Jack Fittings	2-198
Jacking and Leveling	1-86
Jackshaft, Collective	11-7
Jettison (Ejection) Mechanism-Crew Door.	2-98
Jettison Release Mechanism-Emergency	16-8
Junction Box, Armament	16-101

K

Kits, First Aid	17-1

L

Landing and Searchlight System	9-197
Landing and Searchlights	9-200
Landing Gear Assembly	3-1
Landing Gear Crosstubes	3-8
Latch-Cargo Door	2-122
Latch-Typical-Cargo Door	F2-35
Latching Mechanism Crew Doors	2-92
Latching Mechanism—Crew Door	F2-29
Launcher and Adapter	16-80
Lead Spool Resistor—Thermocouple	8-111
Leveling and Jacking	1-36
Lever Assembly-Cyclic Controls, Tube and	11-65
Levers and Supports-Cyclic Control System, Bell Cranks	11-101
Lift Beam	2-58
Lift Beam Damage Limits and Repair	F2-21
Lift Beam-Repair	F2-22
Lift Link-Pylon Mounts	6-142
Light—Anticollision	9-211
Light System—Anticollision	9-207
Light System—Caution	9-169
Light—Transmission Oil Level	9-236
Lighting Provisions	9-138
Lighting System, Instrument, 5 volt	9-86.1
Lights—Cockpit	9-142
Lights—Dome	9-151
Lights—Navigation	9-222
Lights-Navigation-Flasher	9-229
Lights System—Exterior	9-194
Limits Chart-Main Driveshaft Assembly, P/N 205-040-004	F6-10
Linear Actuator	4-118
Lines, Manifolds, Fittings and Screens	6-81
Lines, Manifold, Fittings and Screens—Transmission Assembly	F6-19
Litter Rack	16-15
Loadmeter	8-303
Lower Case Repair—Transmission Assembly (AVIM)	6-37
Lower Forward Cabin Windows	2-168
Lubrication Chart	F1-6
Lubrication Instructions	1-30
Lubrication-Transmission Assembly	6-27

M

Machine Gun—M6 Subsystem 7.62MM, M60C	16-51
Machine Gun M60D in Stowed Position, RS, Armament Subsystem M23	F16-12
Machine Gun XM213, .50 Caliber	F16-22
Magnetic Brake-Cyclic Controls	11-73
Magnetic Brake-Tail Rotor Controls	11-111
Magnetic Indicators—Radio (ID 998( )/ ASN and ID-250( )/ARN)	8-223

ALPHABETICAL INDEX

	Paragraph
Main and Tail Rotor System-Servicing	1-7
Main Beams at Station 129 (AVIM)-Repair of Cracked	2-65
Main DC Generator	9-60
Main Driveshaft P/N 205-040-004	6-13
Main Driveshaft Assembly—Limits Chart P/N 205-040-004	F6-10
Main Driveshaft Assembly and Installation P/N 205-040-004	F6-9
Main Driveshaft-Inspection Criteria for Spherical Inner Couplings	F6-12
Main Inverter Power Relay	9-105
Main Rotor Blade	5-27
Main Rotor Hub	5-14
Main Rotor Hub and Blade Assembly	5-3
Adjustment, Collective Pitch Forces	5-8
Alignment	5-7
Autorotation RPM Adjusting	5-10
Cleaning	5-5
Description	5-4
Installation	5-13
Lubrication	5-6
Operational Check	5-9
Removal	5-12
Troubleshooting	5-11
Main Rotor Mast Assembly	6-134
Main Rotor System	5-1
Maintenance Allocation Chart	B-1
Maintenance-Instrument	8-1
Manifold Assembly	10-53
Manifolds, Fittings, and Screens—Lines	6-81
Map and Data Case	2-210
Mark 8 Sight Assembly	16-97
Master Caution Panel	9-173
Master Guide—Aircraft Inventory Appendix C	C-1
Metal Surfaces Bonded Panels—Repair of Voids	F2-10
Mine Dispenser Control Panel	16-38
Mine Dispenser, M56	16-43
Mine Dispensing Subsystem	16-37
Minimum Breakaway Torque for Used All-Metallic and Nonmetallic Self-Locking Nuts	T1-7
Miscellaneous Electrical Components	9-5
Miscellaneous Equipment	9-240
Miscellaneous Instruments	8-229
Mission Antenna Actuator System	9-289
Mission Antenna Mount—Aft	9-310, F9-15
Mission Antenna Mount—Forward	9-291. F9-11
Mission Antenna Mount Linear Actuator—Aft	9-316
Mission Antenna Mount Linear Actuator—Forward	9-297
Mission Antenna Mount Alignment Procedure—Aft	9-322
Mission Antenna Mount Alignment Procedure—Forward	9-303
Mission Operator Seats	2-252,1, F2-48.1
Mixing Lever Assembly-Cyclic Controls	11-87
Mooring	1-42
Mooring Fittings	2-204
Motor Driven Shutoff Valve	10-39
Mount and Adapter—M6 Subsystem 7.6MM, M60C Machine Gun	16-56
Muff Heater System Circuitry	9-273
M56 Mine Dispenser	16-43

N

Navigation Instruments	8-219
Navigation Lights	9-222
Navigation Lights Flasher	9-229
Navigation Lights System	9-218
Navigation Lights System—Troubleshooting	T9-13
Nonessential Bus Relay	9-87
Non-Self-Purging Particle Separator	4-37
Non-Self-Purging Air Particle Separator—Inlet Screen	
Cleaning	4-34
Inspection	4-32
Installation	4-36
Removal	4-33
Repair	4-35
Nose Door	2-77
Nozzles, Registers, Gaskets and Miscellaneous Valves—Ducts	13-4

0

Oil Cooler Assembly	6-217
Oil Cooler Assembly	4-91
Oil Contamination, Chip Detector	4-101
Oil Filter—External	F6-57, 6-204
Oil Filter—Transmission	6-41
Oil Jets	6-60
Oil Level Light—Transmission	9-236
Oil Level Sight Gages	6-75
Oil Lines, Hoses, and Fittings	4-77
Oil Pressure Indicator—Engine	8-60
Oil Pressure Indicating System—Engine	8-58

ALPHABETICAL INDEX

Paragraph

Oil Pressure Indicating System - Transmission 8-259
Oil Pressure Indicator - Transmission 8-260
Oil Pressure Switch - Engine 4-147
Oil Pressure Transmitter-Engine 8-69
Oil Pressure Transmitter-Transmission . 8-269
Oil Pump 6-50
Oil System 4-74
Oil System-Transmission 6-201
Oil Tank, Engine 4-84
Oil Temperature Bulb - Engine 8-90
Oil Temperature Bulb-Transmission 8-289
Oil Temperature Indicating System -Engine 8-78
Oil Temperature Indicating System-Transmission 8-278
Oil Temperature Indicator-Engine 8-80
Oil Temperature Indicator - Transmission 8-280
Outer Coupling Lubrication F6-6
Overhaul and Retirement Schedule T1-8
Overheat Switch 13-34
Overload Sensing Relay 14-130
Overvoltage Relay 9-85

P

Panel Assembly -Armament Control 16-89
Panel Assembly -Sight Light 16-93
Panel-Hinged 2-104
Panel -Master Caution 9-173
Panels -Cabin Floor 2-28
Paratroop Static Line Cable 2-192
Paratroop Static Line Cable 16-109
Parking 1-39
Part Numbers and Usable on Codes 4-138
Particle Separator-Non-Self-Purging . . . 4-37
Particle Separator Self-Purging - Air Inlet Filters 4-45
Pedestal Lights-instrument, Console 9-160
Pilots Collective Stick 11-25
Pilot - Static System 8-163
Plate, Adapter Hoist 14-84
Plexiglass -Cleaning 1-18
Power Distributing System - Alternating Current 9-89
Power Distribution System - Direct Current 9-1
Power Lever Controls 4-110

Paragraph

Power Plant Assembly 4-1
Power Plant Electrical Cable Installation . . 4-153
Power Receptacle-External 9-47
Power Relay - Main Inverter 9-54
Power Relay - External 9-105
Power Relay - Spare Inverter 9-107
Power System - External 9-43
Power Turbine N2 Tachometer Generator Installation 4-152
Power Turbine Tachometer Generator . . . 8-22
Premaintenance Requirements - Instrument 8-8
Pressure Indicating System-Fuel 8-121
Pressure Indicating System-Torque 8-141
Pressure Indicator - Fuel 8-123
Pressure Indicator-Torque 8-143
Pressure Relief Valve 6-67
Pressure Switch 7-53
Pressure Transmitter-Fuel 8-132
Pressure Transmitter-Torque 8-152
Pylon Fifth Mount Support 2-62
Pylon Mounts and Lift Link 6-142

Q

Quantity Indicating System-Fuel 8-241
Quantity Indictor-Fuel 8-243
Quantity Transmitters-Fuel 8-252
Quill-Input Drive P/N 205-040-263 6-101
Quill-Input Drive P/N 204-040-363 6-92
Quill-Generator Drive 6-109
Quills-Input Drive 6-90

R

Radar Warning Indicating System (AN/APR-39) (When installed) 8-314
Radio Magnetic Indicators (ID-998( )/ASN and ID-250 ( )/ARN) 8-223
Rearview Mirror 2-175
Receptacle -Engine Vibration Meter 9-120
Receptacle - External Power 9-47
Receptacles -Heated Blanket 9-276
References -Appendix A A-1
Registers, Gaskets and Miscellaneous Valves-Ducts-Nozzles 13-4
Regulator-Voltage 9-71
Reinforced Floor Mounting Plates and Base Assembly F2-18.2, 2-27.1
Relay
Battery 9-39
Battery Feeder 9-41

ALPHABETICAL INDEX

	Paragraph
Bus Control	9-83
External Power	9-54
Generator Field	9-79
Inverter	9-109
Main Inverter Power	9-105
Nonessential Bus	9-87
Overvoltage	9-85
Reverse Current	9-81
Spare Inverter Power	9-107
Relief Valve	7-39
Repair of Cracked Spar Cap Angles on Main Beams at Station 129 (AVIM)	2-65
Repair of Damage Penetrating Titanium and Fiberglass Facings and Core-Honeycomb Panel	F2-11
Repair of Dents, Scars and Scratches—Honeycomb Panels	F2-6
Repair of Voids in Metal Surfaces Bonded Panels	F2-10
Repair or Replacement—-Transmission (AVIM)	6-35
Replacement Chart-Comector	F-9
Replacement Damaged Studs—Transmission Assembly (AVIM)	6-36
Requirements	C-5
Reservoir, Hydraulic	7-9
Rescue Hoist	14-1
Rescue Hoist System Circuitry (Provisions)	9-286
Resistor—Therrnocouple Lead Spool	8-111
Retirement Schedule	1-65
Return to Overhaul—Transmission Assembly (AVIM)	6-38
Reverse Current Relay	9-81
Rocket Launcher and Adapter	16-80
Rocket System XM3	16-76
Rotor Blades—Cleaning	1-19
Rotor Blades—Tail	5-114
Rotor Hub, Main	5-14
Rotor System, Main	5-1
Rotor System Torque Values	F5-5
Rotor Tachometer Generator	8-31
RPM Limit Warning Detector	9-186
RPM Limit Warning Detector—Bench Test Set Up	F9-10
RPM Limit Warning Detector-Cables for Alignment	F9-9
RPM Limit Warning Detector-SDI Model	F9-8
RPM Limit Warning Detector Models—Isolation of Circuits for Alignment	T9-9
RPM Limit Warning Detector—Saturn Model	F9-7
RPM Limit Warning Detector—SDI Model	F9-8
RPM Limit Warning System	9-181
RPM Limit Warning System—Troubleshooting	T9-10
Rubber Pressure Roller	14-77

S

	Paragraph
Saturn Model RPM Limit Warning Detector	F9-7
Scale and Friction Error Tolerances Plus or Minus° Celsius—EGT Indicator	T8-6
Schedule—Retirement	1-65
Schematic Diagram-Combustion Air Blower	F13-6
Schematic Diagram—Electric Motor Assembly	F12-6
Schematic Diagram—Fuel Quantity Installation (Crashworthy)	F8-5
Schematic—Icing System Test Box	F9-3
Scissors and Sleeve Assembly	5-74
Screens—Lines, Manifolds, Fittings	6-81
Searchlight and Landing System	9-196
Seat Belts----crew	2-241
Seat Belts—Troop	2-261
Seat Covers-Crew	2-225
Seat Cover/Stencil—Crew	F2-45
Seat--Crew	F2-44
Seat-Crew-Armored	2-247
Seating Arrangement	F2-49
Seating Arrangement (EH-1H)	F2-49.1
Seats—Troop	2-253
Self-Locking Nuts—Reuse	1-29
Service Deck—Right and Left	2-19
Servicing	1-1
Auxiliary Fuel System	1-4
Battery	1-12
Description	1-2
Engine Oil System	1-5
Ground Handling Wheel Pump	1-10
Ground Handling Wheel Tires	1-11
Hydraulic Reservoir	1-9
Intermediate (42 degree) and Tail Rotor (90 degree) Gearboxes	1-8
Mail and Tail Rotor System	1-7
Smoke Generator Subsystem Tank	16-26
Transmission Oil System	1-6
Servicing Points Diagram	F1-1
Servo Cylinder Assembly (Collective Control), Hydraulic	7-80

ALPHABETICAL INDEX

	Paragraph
Servo Cylinder Assembly (Cyclic Control), Hydraulic	7-67
Sheet Metal Skins	2-20
Sheet Metal Skins Forward Fuselage—Classification of Damage	T2-6
Short Term Storage	E-3
Shoulder Harness and Inertia Reel-Crew Standard Seat	2-231
Shunt-Generator	9-69
Sight Assembly, Mark 8	16-97
Sight Gages-Oil Level	6-75
Sight Light Panel Assembly	16-93
Sight Station-M6 Subsystem 7.62MM M60C Machine Gun	16-68
Siphon Breaker Valve	10-65
Skid Saddles	3-26
Skid Shoes	3-20
Skid-Tail	2-298
Skid Tubes	3-14
Skin and Stringer Repair-Combined,	F2-15
Skins-Sheet Metal	2-20
Skins—Tailboom	F2-5
Sleeve Assembly, Scissors and	5-74
Sling Loading	1-51
Slip Indicator—Turn	8-201
Smoke Generator Subsystem	16-21
Solenoid Valve-Start Fuel	9-136
Solenoid Valves	7-60
Spar Cap Angles on Main Beams at Station 129 (AVIM)	2-65
Spar Cap Angle Repair	F2-24
Spare Inverter Power Relay	9-107
Special Inspection	1-58
Special Instructions-Engine Quick Change Assembly	4-136
Special Tools and Test Equipment	1-24
Special Tools and Test Equipment	T1-2
Spherical Couplings on Main Driveshaft—Inspection Criteria P/N 204-040-010	F6-3
Splice Fabrication	F2-24.2
Splined Nut—Limits Chart	F6-4
Spool Resistor—Thermocouple Lead	8-111
Spray Nozzle-Combustion Heater—Exploded View	F13-4
Stabilizer Bar Assembly	5-35
Standard Crew Seat	F2-44, 2-216
Standard Torque Chart	T1-4
Standard Torque procedures and Requirements	1-28
Standard Torque Values—Engine Quick Change Assembly	4-137
Standards of Serviceability	1-57
Standby Compass	8-225
Standby Compass—Troubleshooting	T8-14
Standby Generator (Starter Generator)	9-67
Start Fuel Solenoid Valve	9-136
Starter Generator	9-126
Starter-Generator Installation	4-150
Starting System	9-122
Static Line Cable—Paratroop	2-192, F2-43
Static Line Cable, Paratroop	16-109
Storage and Shipment of High Performance Hoist	14-145.110
Storage of Aircraft-Appendix E	E-1
Strap Splice	F2-24.3
Structure-Fuselage	2-3, F2-2
Structure-Tailboom	2-294
Structural Repair Materials	T2-1
Studs—Torque Values	T1-6
Support Assemblies	11-72.1
Support Equipment	1-26
Support-External Stores	16-1
Support Fittings—Tail Rotor Driveshaft	6-174
Suppressor—Heat	2-273
Suspension Assembly, Cargo	14-146
Swashplate and Support Assembly	5-57

T

Tachometer Drive Quill—Hydraulic Pump	6-118
Tachometer—Dual	8-14
Tachometer—Dual—Troubleshooting	T8-1
Tachometer Generator—Gas Producer	8-49
Tachometer Generator Installation, Gas Producer N1	4-151
Tachometer Generator Installation, Power Turbine N2	4-152
Tachometer Generator—Power Turbine	8-22
Tachometer Generator—Rotor	8-31
Tachometer Indicating Systems	8-12
Tachometer Indicator-Gas Producer	8-40
Tailboom Assembly	2-280
Tailboom Skins	F2-5
Tailboom Structure	2-294
Tailpipe-Exhaust System	4-67
Tailpipe Fairing	2-51
Tail Rotor Blades	5-114

ALPHABETICAL INDEX

Paragraph

Tail Rotor Control Chain Conversion Procedures 11-154
Tail Rotor Control System 11-108
Tail Rotor Crosshead Controls 5-107
Tail Rotor Drive Quill 6-125
Tail Rotor Driveshaft 6-159
Tail Rotor Driveshaft Support Fittings 6-174
Tail Rotor Gearbox F6-52, 6-190
Tail Rotor Hub 5-98
Tail Rotor Hub and Blade Assembly. 5-88
Tail Rotor Hydraulic Cylinder and support 11-163.1
Tail Rotor System 5-85
Tail Skid 2-298
Temperature Bulb - Engine Oil 8-90
Temperature Control Valve 13-101
Temperature-Millivolts vs T8-5
Test Box Schematic -icing System.. . . . . F9-3
Test Circuit (Crashworthy) - Indicator Bench F8-6
Test Connections, Ground 7-33
Testing Windshield Wiper F12-8
Thermal Valve 6-211
Thermocouple Lead Spool Resistor.. 8-111
Thermostat-Cabin 13-47
ToolApplication- Use of Alignment Tool Set (T47) F6-8
Torque Application F1-3
Torque Chart T1-4
Torque Procedures andRequirements- Standard 1-28
Torque Values for Fluid Connectors T1-5
Torque Values for Studs T1-6
Torque Values, Standard - Engine Quick Change Assembly 4-137
Towing 1-34. F1-8
Tracking and Operational Check 5-120
Tracks -Cargo Door 2-137
Transformer- AC 9-113
Transmission and Engine Cowling F2-20
Transmission Assembly 6-25
Transmission Assembly -Build-Up-Universal F6-15
Transmission Assembly and Gearboxes~. identification of Metal Particles 6-30, F6-14
Transmission Assembly (AVIM) - Replacement Damaged Studs 6-36
Transmission Assembly - Universal Basic Configuration F6-18
Transmission Cowling 2-37
Transmission Oil Filter F6-20, 6-41, F6-21
Transmission Oil Level Light 9-236
Transmission Oil Level Light - Trouble-Shooting T9-14
Transmission Oil Pressure Indicating System 8-258
Transmission Oil Pressure Indicator 8-260
Transmission Oil Pressure Transmitter . . . 8-269
Transmission Oil System 6-201
Transmission Oil System-Servicing 1-6
Transmission Oil Temperature Bulb 8-289
Transmission Oil Temperature Indicating System 8-278
Transmission Oil Temperature Indicator . . 8-280
Transmission Vent Valve 6-59.1
Transmission Pressure Transmitter and Switch F6-16
Transmitter and Switch-Transmission Pressure F6-16
Transmitter -Engine Oil Pressure 8-69
Transmitter -Fuel Pressure 8-132
Transmitter -Torque Pressure 8-152
Transmitter -Transmission Oil Pressure . 8-269
Transmitters-Fuel Quantity 8-252
Repair or Replacement 8-256
Treating Corroded Parts-Cleaning T2-4
Trigger Detent Mechanism 11-64.1
Troop Seat Belts 2-261
Troop Seats 2-253
Troubleshooting- Air Distribution System Helicopters S/N62-12351 through 64-13901 . . . . . T13-1
Troubleshooting -Airspeed Indicator T8-9
Troubleshooting Anti-collision Light System T9-12
Troubleshooting -Attitude Indicator T8-11
Troubleshooting -Barometric Altimeter . . T8-10
Troubleshooting Battery System T9-1
Troubleshooting Clock T8-15
Troubleshooting Cockpit Lights T9-8
Troubleshooting Converter Assembly T12-3
Troubleshooting DC Voltmeter T8-17
Troubleshooting Dual Tachometer T8-1
Troubleshooting- Electric Motor Assembly T12-2
Troubleshooting Engine De-Ice Circuitry.. T9-15
Troubleshooting Engine Oil Pressure Indicator T8-2
Troubleshooting Engine Oil Temperature Indicator T8-3
Troubleshooting Exhaust Gas Temperature Indicator T8-4
Troubleshooting External Power System . T9-2
Troubleshooting Fire Detector T12-1
Troubleshooting Force Trim System Circuitry T9-17

*U.S. GOVERNMENT PRINTING OFFICE: 1995-655-121/20040 PIN: 040152-007

ALPHABETICAL INDEX

	Paragraph
Troubleshooting Fuel Pressure Indicator	T8-7
Troubleshooting Fuel Quantity Indicator	T8-16
Troubleshooting Generator and DC Bus System (Helicopters Prior to S/N 66-746)	T9-3
Troubleshooting Generator and DC Bus System (Helicopter S/N 66-746 and Subsequent)	T9-4
Troubleshooting 5-Volt Instrument Lighting System	T9-4.1
Troubleshooting Governor Control System Circuitry	T9-16
Troubleshooting Cargo Suspension Assembly	T14-3
Troubleshooting Inverter System	T9-5
Troubleshooting Landing and Search-Light System	T9-11
Troubleshooting Main Driveshaft P/N 205-040-004	6-16, T6-2
Troubleshooting Navigation Lights System	T9-13
Troubleshooting RPM Limit Warning System	T9-10
Troubleshooting Standby Compass	T8-14
Troubleshooting Starter System	T9-6
Troubleshooting Torque Pressure Indicator	T8-8
Troubleshooting-Transmission Oil Level Light	T9-14
Troubleshooting-Turn and Slip Indicator	T8-12
Troubleshooting—Transmission Assembly	T6-4
Troubleshooting Vertical Velocity Indicator	T8-13
Truck, Ground Handling	3-33
Tube and Lever Assembly-Cyclic Controls	11-65
Tubes-Cyclic Control System Control	11-95
Turn and Slip Indicator	8-201
Turn and Slip Indicator-Troubleshooting	T8-12
Twenty Minutes Fuel Warning System Float Switch	10-87

U

Universal Transmission Assembly—Basic Configuration	F6-18
Universal Transmission Assembly—Build-up	F6-15
Upper Door Window-Crew Door	2-140
Use of the Maintenance Allocation Chart	B-2
Use of Tool Set (T47)—Tool Application	F6-8

V

Valve Control Temperature	13-101
Valve-Pressure Relief	6-67
Valve-Start Fuel Solenoid	9-136
Valve-Thermal	6-211
Velocity Indicator—Vertical	8-210
Vent Blower-Combustion Heater	13-67
Ventilation, Air Scoop Assemblies	13-9
Vertical Velocity Indicator	8-210
Vibration Meter Receptacle-Engine	9-120
Voltage Regulatory	9-71
Voltmeter—AC	8-298
Voltmeter-DC	8-300
Troubleshooting	8-302

W

Warning Detector-RPM Limit	9-186
Warning Indicating System (AN/APR-39) (When Installed)—Radar	8-314
Warning System—RPM Limit	9-181
Wheels and Tire Assembly-Ground Handling Gear	3-41
Window—Adjustable-Crew Door	2-154
Window—Forward Crew Door	2-147
Window—Upper-Crew Door	2-140
Windows-Cabin-Lower Forward	2-168
Windows-Cabin Roof	2-161
Windows-Crew Door Remove/Install	F2-42
Windshield	2-133
Windshield and Windows Critical Areas and Repair Limits	F2-41
Windshield Installation	F2-40
Windshield Wiper	12-9
Windshield Wiper Installation	F12-2
Windshield Wiper System Circuitry	9-280
Windshield Wiper—Testing	F12-8
Wiper Shaft-Positioning	F12-5
Wiper System Circuitry-Windshield	9-280
Wiper—Windshield	12-9
Wiper-Windshield-Installation	F12-2
Wiring Data	F-3
Abbreviations	F-5
symbols	F-6
Wiring Identification	F-4
Wiring Diagram Index	F-13

X, Y, Z

*U.S. GOVERNMENT PRINTING OFFICE 1990 754-125/00125

By Order of the Secretary of the Army:

CARL E. VUONO
General, United States Army
Chief of Staff

Official:

R.L. DILWORTH
Brigadier General, United States Army
The Adjutant General

Distribution:

To be distributed in accordance with DA Form 12-31, AVUM and AVIM requirements for UH-1H, UH-1V, Helicopter, Utility, EH-1H, Helicopter, Electronic Countermeasure and EH-1X Helicopter, Electronic Countermeasure & Intercept.

These are the instructions for sending an electronic 2028

The following format must be used if submitting an electronic 2028. The subject line must be exactly the same and all fields must be included; however only the following fields are mandatory: 1, 3, 4, 5, 6, 7, 8, 9, 10, 13, 15, 16, 17, and 27.

From: “Whomever” <whomever@wherever.army.mil>
To: 2028@redstone.army.mil

Subject: DA Form 2028

1. ***From:*** Joe Smith
2. *Unit:* home
3. ***Address:*** 4300 Park
4. ***City:*** Hometown
5. ***St:*** MO
6. ***Zip:*** 77777
7. ***Date Sent:*** 19–OCT–93
8. ***Pub no:*** 55–2840–229–23
9. ***Pub Title:*** TM
10. ***Publication Date:*** 04–JUL–85
11. *Change Number:* 7
12. *Submitter Rank:* MSG
13. ***Submitter FName:*** Joe
14. *Submitter MName:* T
15. ***Submitter LName:*** Smith
16. ***Submitter Phone:*** 123–123–1234
17. ***Problem:*** **1**
18. *Page:* 2
19. *Paragraph:* 3
20. *Line:* 4
21. *NSN:* 5
22. *Reference:* 6
23. *Figure:* 7
24. *Table:* 8
25. *Item:* 9
26. *Total:* 123
27. ***Text:***

This is the text for the problem below line 27.

RECOMMENDED CHANGES TO PUBLICATIONS AND BLANK FORMS For use of this form, see AR 25–30; the proponent agency is ODISC4.	Use Part II (*reverse)* for Repair Parts and Special Tool Lists (RPSTL) and Supply Catalogs/ Supply Manuals (SC/SM)	DATE 8/30/02

TO: (*Forward to proponent of publication or form)(Include ZIP Code)*	FROM: (*Activity and location)(Include ZIP Code)*
Commander, U.S. Army Aviation and Missile Command ATTN: AMSAM–MMC–MA–NP Redstone Arsenal, AL 35898	MSG, Jane Q. Doe 1234 Any Street Nowhere Town, AL 34565

PART 1 – ALL PUBLICATIONS (EXCEPT RPSTL AND SC/SM) AND BLANK FORMS

PUBLICATION/FORM NUMBER	DATE	TITLE
TM 9–1005–433–24	16 Sep 2002	Organizational, Direct Support, And General Support Maintenance Manual for Machine Gun, .50 Caliber M3P and M3P Machine Gun Electrical Test Set Used On Avenger Air Defense Weapon System

ITEM NO.	PAGE NO.	PARA–GRAPH	LINE NO. *	FIGURE NO.	TABLE NO.	RECOMMENDED CHANGES AND REASON
1	WP0005 PG 3		2			Test or Corrective Action column should identify a different WP number.

** Reference to line numbers within the paragraph or subparagraph.*

TYPED NAME, GRADE OR TITLE	TELEPHONE EXCHANGE/ AUTOVON, PLUS EXTENSION	SIGNATURE
MSG, Jane Q. Doe, SFC	788–1234	

EXAMPLE

TO: (*Forward direct to addressee listed in publication*)	**FROM:** (*Activity and location*) (*Include ZIP Code*)	**DATE**
Commander, U.S. Army Aviation and Missile Command ATTN: AMSAM–MMC–MA–NP Redstone Arsenal, AL 35898	MSG, Jane Q. Doe 1234 Any Street Nowhere Town, AL 34565	8/30/02

PART II – REPAIR PARTS AND SPECIAL TOOL LISTS AND SUPPLY CATALOGS/SUPPLY MANUALS

PUBLICATION NUMBER	DATE	TITLE

PAGE NO.	COLM NO.	LINE NO.	NATIONAL STOCK NUMBER	REFERENCE NO.	FIGURE NO.	ITEM NO.	TOTAL NO. OF MAJOR ITEMS SUPPORTED	RECOMMENDED ACTION

PART III – REMARKS (*Any general remarks or recommendations, or suggestions for improvement of publications and blank forms. Additional blank sheets may be used if more space is needed.*)

TYPED NAME, GRADE OR TITLE	TELEPHONE EXCHANGE/AUTOVON, PLUS EXTENSION	SIGNATURE
MSG, Jane Q. Doe, SFC	788–1234	

EXAMPLE

RECOMMENDED CHANGES TO PUBLICATIONS AND BLANK FORMS For use of this form, see AR 25–30; the proponent agency is ODISC4.	Use Part II (*reverse)* for Repair Parts and Special Tool Lists (RPSTL) and Supply Catalogs/ Supply Manuals (SC/SM)	DATE
TO: (*Forward to proponent of publication or form)(Include ZIP Code)* Commander, U.S. Army Aviation and Missile Command ATTN: AMSAM-MMC-MA-NP Redstone Arsenal, AL 35898	FROM: (*Activity and location)(Include ZIP Code)*	

PART 1 – ALL PUBLICATIONS (EXCEPT RPSTL AND SC/SM) AND BLANK FORMS

PUBLICATION/FORM NUMBER	DATE	TITLE

ITEM NO.	PAGE NO.	PARA–GRAPH	LINE NO. *	FIGURE NO.	TABLE NO.	RECOMMENDED CHANGES AND REASON

** Reference to line numbers within the paragraph or subparagraph.*

TYPED NAME, GRADE OR TITLE	TELEPHONE EXCHANGE/ AUTOVON, PLUS EXTENSION	SIGNATURE

TO: (*Forward direct to addressee listed in publication)* Commander, U.S. Army Aviation and Missile Command ATTN: AMSAM-MMC-MA-NP Redstone Arsenal, AL 35898	**FROM:** (*Activity and location) (Include ZIP Code)*	**DATE**

PART II – REPAIR PARTS AND SPECIAL TOOL LISTS AND SUPPLY CATALOGS/SUPPLY MANUALS

PUBLICATION NUMBER	DATE	TITLE

PAGE NO.	COLM NO.	LINE NO.	NATIONAL STOCK NUMBER	REFERENCE NO.	FIGURE NO.	ITEM NO.	TOTAL NO. OF MAJOR ITEMS SUPPORTED	RECOMMENDED ACTION

PART III – REMARKS (*Any general remarks or recommendations, or suggestions for improvement of publications and blank forms. Additional blank sheets may be used if more space is needed.)*

TYPED NAME, GRADE OR TITLE	TELEPHONE EXCHANGE/AUTOVON, PLUS EXTENSION	SIGNATURE

The Metric System and Equivalents

Linear Measure

1 centimeter = 10 millimeters = .39 inch
1 decimeter = 10 centimeters = 3.94 inches
1 meter = 10 decimeters = 39.37 inches
1 dekameter = 10 meters = 32.8 feet
1 hectometer = 10 dekameters = 328.08 feet
1 kilometer = 10 hectometers = 3,280.8 feet

Weights

1 centigram = 10 milligrams = .15 grain
1 decigram = 10 centigrams = 1.54 grains
1 gram = 10 decigram = .035 ounce
1 decagram = 10 grams = .35 ounce
1 hectogram = 10 decagrams = 3.52 ounces
1 kilogram = 10 hectograms = 2.2 pounds
1 quintal = 100 kilograms = 220.46 pounds
1 metric ton = 10 quintals = 1.1 short tons

Liquid Measure

1 centiliter = 10 milliters = .34 fl. ounce
1 deciliter = 10 centiliters = 3.38 fl. ounces
1 liter = 10 deciliters = 33.81 fl. ounces
1 dekaliter = 10 liters = 2.64 gallons
1 hectoliter = 10 dekaliters = 26.42 gallons
1 kiloliter = 10 hectoliters = 264.18 gallons

Square Measure

1 sq. centimeter = 100 sq. millimeters = .155 sq. inch
1 sq. decimeter = 100 sq. centimeters = 15.5 sq. inches
1 sq. meter (centare) = 100 sq. decimeters = 10.76 sq. feet
1 sq. dekameter (are) = 100 sq. meters = 1,076.4 sq. feet
1 sq. hectometer (hectare) = 100 sq. dekameters = 2.47 acres
1 sq. kilometer = 100 sq. hectometers = .386 sq. mile

Cubic Measure

1 cu. centimeter = 1000 cu. millimeters = .06 cu. inch
1 cu. decimeter = 1000 cu. centimeters = 61.02 cu. inches
1 cu. meter = 1000 cu. decimeters = 35.31 cu. feet

Approximate Conversion Factors

To change	*To*	*Multiply by*	*To change*	*To*	*Multiply by*
inches	centimeters	2.540	ounce-inches	Newton-meters	.007062
feet	meters	.305	centimeters	inches	.394
yards	meters	.914	meters	feet	3.280
miles	kilometers	1.609	meters	yards	1.094
square inches	square centimeters	6.451	kilometers	miles	.621
square feet	square meters	.093	square centimeters	square inches	.155
square yards	square meters	.836	square meters	square feet	10.764
square miles	square kilometers	2.590	square meters	square yards	1.196
acres	square hectometers	.405	square kilometers	square miles	.386
cubic feet	cubic meters	.028	square hectometers	acres	2.471
cubic yards	cubic meters	.765	cubic meters	cubic feet	35.315
fluid ounces	milliliters	29,573	cubic meters	cubic yards	1.308
pints	liters	.473	milliliters	fluid ounces	.034
quarts	liters	.946	liters	pints	2.113
gallons	liters	3.785	liters	quarts	1.057
ounces	grams	28.349	liters	gallons	.264
pounds	kilograms	.454	grams	ounces	.035
short tons	metric tons	.907	kilograms	pounds	2.205
pound-feet	Newton-meters	1.356	metric tons	short tons	1.102
pound-inches	Newton-meters	.11296			

Temperature (Exact)

°F	Fahrenheit temperature	5/9 (after subtracting 32)	Celsius temperature	°C

PIN: 040152-000